CLERK'S COPY.

TRANSCRIPT OF RECORD

Supreme Court of the United States

OCTOBER TERM, 1935.

No. 23

THE BASSICK MANUFACTURING COMPANY,
PETITIONER,

vs.

THE R. M. HOLLINGSHEAD COMPANY.

ON WRIT OF CERTIORARI TO THE UNITED STATES CIRCUIT COURT OF APPEALS FOR THE SIXTH CIRCUIT.

PETITION FOR CERTIORARI FILED APRIL 13, 1935.

CERTIORARI GRANTED MAY 20, 1935.

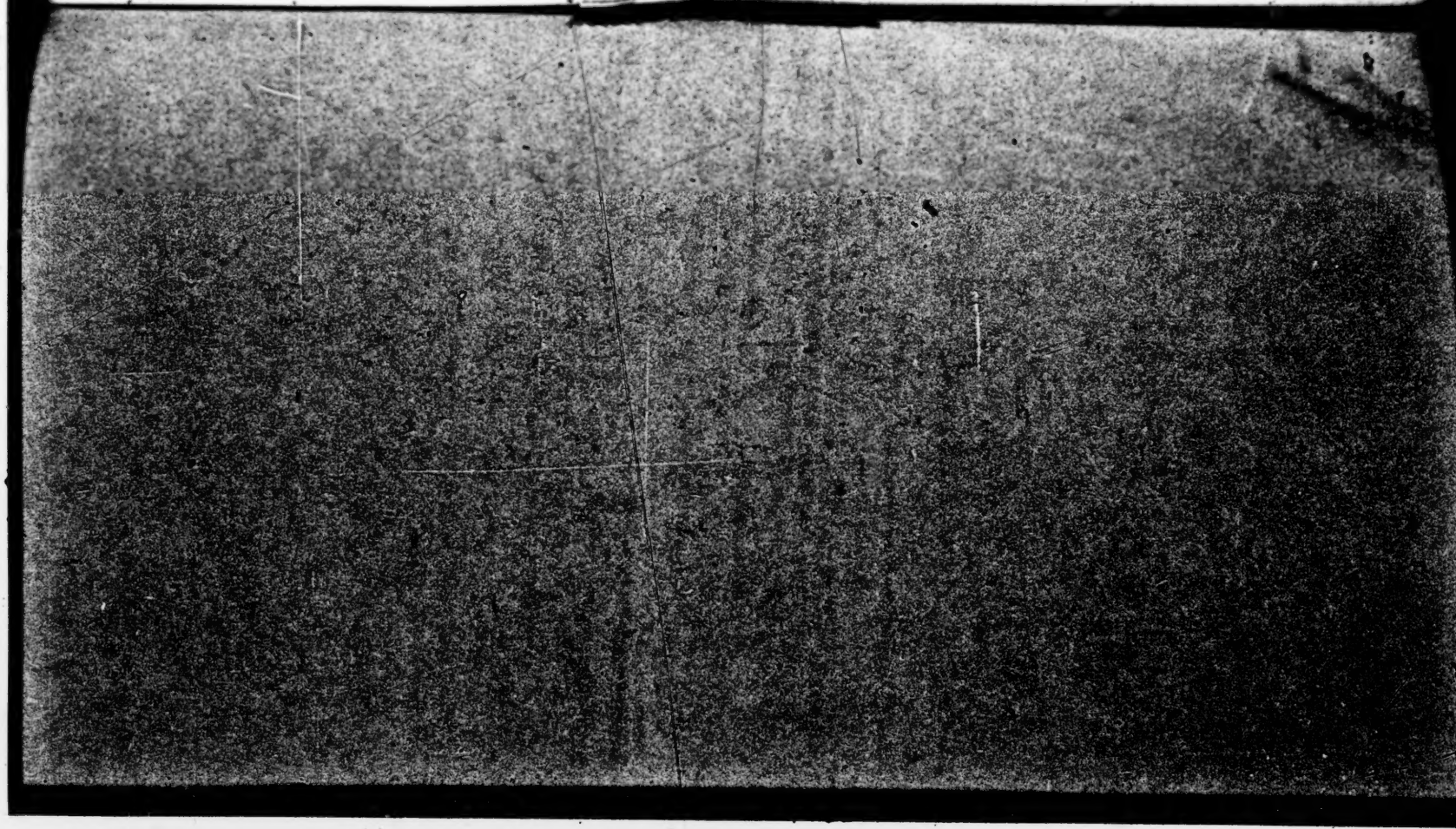

SUPREME COURT OF THE UNITED STATES

OCTOBER TERM, 1934

No.

THE BASSICK MANUFACTURING COMPANY,
PETITIONER,

vs.

THE R. M. HOLLINGSHEAD COMPANY

ON PETITION FOR WRIT OF CERTIORARI TO THE UNITED STATES CIRCUIT COURT OF APPEALS FOR THE SIXTH CIRCUIT

INDEX

	Original	Print
Record from D. C. U. S. Western District of Tennessee	1	1
Bill of complaint	1	1
Answer	4	3
Amended bill of complaint	11	11
Answer to amended bill of complaint	14	14
Affidavit of D. A. Beezley	19	19
Exhibit "B"—Duplicate of original order	21	21
"C"—Original invoice	22	22
"D"—Delivery ticket	24	23
Affidavit of O. A. Cumming	26	26
Exhibit "B"—Instructions for filling and operating Whiz grease gun	27	26
Exhibit "C"—Shipping order	30	28
Order granting leave to amend answer	32	31
Amendment to answer	32	31
Order for preliminary injunction	37	36
Order modifying preliminary injunction	38	37

JUDD & DETWEILER (INC.), PRINTERS, WASHINGTON, D. C., FEBRUARY 28, 1935.

	Original	Print
Petition of defendant for leave to use new devices, etc.	38	38
Order of reference as to use by defendant of new devices	40	39
Supplemental petition of defendant for leave to use new devices, etc.	40	40
Writ of injunction	41	40
Statement of evidence before Master	43	42
Testimony of Hugo C. Gibson	43	42
John M. McGregor	54	53
Report of standing master on order of reference	60	59
Plaintiff's exceptions to report of standing master	85	85
Defendant's exceptions to master's report	87	87
Amendment to answer	90	90
Exhibit "A"—Portions of record in New Jersey case, Bassick Co. v. Frank Miller Co.	92	92
Bill of complaint	92	92
Answer	97	97
Amendment to answer	105	104
Amendment to answer	106	105
Motion for preliminary injunction	110	109
Exhibit "A"—Copies of advertising matter of Frank H. Miller Co.	111	110
Affidavit of J. E. Otis, Jr.	115	111
Order to show cause	116	112
Excerpts from transcript of hearing before Hon. Joseph L. Bodine	117	113
Notice of motion to dismiss	119	115
Motion to dismiss	120	116
Affidavit of J. E. Otis, Jr.	121	116
Affidavit of Elwood Hansmann	123	118
Exhibit—Drawing of coupler	127	120
Order of dismissal	129	121
Plaintiff's Exhibit "S"—Stipulated testimony of J. E. Otis, Jr.	130	121
Exhibit "I"—Drawings	150	150
Exhibit "J"—Petition for rehearing in cases Bassick v. O. K. Mfg. Co. and Bassick v. Larkin Automobile Parts Co., Sixth Circuit	161	151
Exhibit "K"—Supplement to petition for rehearing.	166	156
Exhibit "L"—Petition for writs of certiorari in O. K. and Larkin cases, and reply brief	175	165
Exhibit "M"—Drawing	191	179
"O-3"—Drawing	192	180
"O-4"—Drawing	193	181
"O-6"—Drawing	194	182
"Q"—Drawing	195	183
"AA"—Drawing	196	184
"BB"—Drawing	197	185
Statement of evidence	199	187
Testimony of Hugo C. Gibson	199	187
Clifford L. Jones	263	253
Louis Nucho	268	258

	Original	Print
Testimony of Roderick W. Smith	270	260
Harold A. Southgate	276	266
Clifford L. Jones (recalled)	279	270
Albin C. Ahlberg	287	277
O. A. Cummings	291	281
L. B. Shipp	293	283
John M. McGregor	297	287
Albin C. Ahlberg (recalled)	299	289
Plaintiff's Exhibit 1—Motion to dismiss in Bassick v. Miller Co., U. S. D. C., New Jersey	300	290
Affidavit of J. E. Otis, Jr.	302	291
Certificate of incorporation of Frank Miller Co.	304	293
Certificate of change of name of Frank Miller Co.	312	301
Annual report of The Frank Miller Co.	314	303
Certificate of incorporation of The R. M. Hollingshead Co.	316	304
Annual report of The R. M. Hollingshead Co.	320	309
Order of dismissal, Bassick v. Miller Co.	323	312
Plaintiff"s Exhibit 2—Affidavit of Frank J. Semple filed in Bassick v. Miller Co.	324	313
Affidavit of Norman R. DeLong, filed in Bassick v. Miller Co.	331	321
Affidavit of Robert M. Bagley, filed in Bassick v. Miller Co.	335	325
Affidavit of E. Hayward Fairbanks, filed in Bassick v. Miller Co.	341	331
Exhibit "A" to Semple affidavit—Letter from Bassick to Miller Co., dated December 5, 1927	351	341
Exhibit "B" to Semple affidavit—Letter from Miller Co. to Bassick, dated December 10, 1927	353	343
Exhibit "C" to Semple affidavit—Letter from Bassick to Miller Co., dated December 22, 1927	354	344
Exhibit "D" to Semple affidavit—Letter from Miller Co. to Bassick, dated January 9, 1928.	354	345
Exhibit "E" to Semple affidavit—Telegram from Bassick to Miller Co., dated January 10, 1928	355	345
Exhibit "F" to Semple affidavit—Letter from Miller Co. to Bassick, dated January 27, 1928	355	346
Exhibit "H" to Semple affidavit—Moody's manual of investments	356	347
Exhibit "I" to Semple affidavit—Moody's manual of investments	359	350
Exhibit "J" to Delong affidavit—Statement of working capital	362	353
Exhibit "K" to DeLong affidavit—Drawings of defendant's coupler in suit	365	356
Plaintiff's Exhibit 4—Disclaimer of Bassick	367	359

	Original	Print
Affidavit of Ernest W. Davis	369	361
Plaintiff's Exhibits 15 and 16 ("J" and "K" to Davis affidavit)—Drawings	373	364
Plaintiff's Exhibit 20—Motion and notice to supplement order of dismissal in Bassick v. Miller Co., D. C. U. S., New Jersey	375	365
Patents in record:		
U. S. Patent No. 1,307,734 to Gullborg	421	411
No. 1,475,980 to Zerk	427	418
No. 242,141 to Laskey & Arnold	436	427
No. 242,564 to Sholder	439	430
No. 456,205 to Stedman	442	433
No. 610,359 to Lees	445	435
No. 1,117,762 to Barcus	448	439
No. 1,201,414 to Winkley	451	442
No. 14,667 to Winkley	456	447
No. 1,307,733 to Gullborg	462	453
No. 1,322,357 to Seng	465	456
No. 1,637,326 to Murphy	468	459
French Patent No. 468,869 to Seng	477	467
British Patent No. 21,893 to Alley	481	471
No. 18,727 to Grey	484	474
No. 26,134 to Sharpe	488	478
French Patent No. 20,083 to Seng	493	483
British Patent No. 3028 to Seng	496	486
U. S. Patent No. 490,541 to Hay & McIntyre	501	490
No. 1,400,871 to Crotly	509	498
No. 1,459,682 to Manzel	511	500
No. 1,494,652 to Wallace	519	508
No. 16,787 to Wallace	524	512
British Patent No. 6940 to Clarkson	529	517
Statement by Judge Anderson	532	521
Decree	533	522
Order defining injunction	534	522
Writ of injunction and return	534	523
Petition for appeal	537	525
Assignment of errors	537	526
Order allowing appeal	540	529
Bond on appeal (omitted in printing)	541	
Citation (omitted in printing)	542	
Plaintiff's petition for cross-appeal	543	529
Assignment of errors	543	530
Order allowing cross-appeal	547	533
Cost bond on cross-appeal (omitted in printing)	547	
Citation and service (omitted in printing)	548	
Orders extending time	549	534
Order filing transcript of evidence	552	535
Order re filing præcipes	552	536
Præcipe for transcript of record	557	536
Plaintiff's supplemental præcipe	562	546
Clerk's certificates (omitted in printing)	564	
Mandate of C. C. A., Sixth Circuit	566	548

	Original	Print
Mandate of C. C. A., Sixth Circuit	567	549
Motion for entry of decree in conformity with mandates	568	550
Order entering decree in conformity with mandates	569	551
Amendment to answer	572	553
Defendant's interrogatories	573	554
Order disallowing motions to set aside former decrees	575	556
Findings of fact as proposed by defendant	576	556
Proceedings on motions to enter decree and findings of fact	577	557
Decree	600	581
Findings of fact and conclusions of law	602	584
Petition for appeal	606	588
Order allowing appeal	608	589
Assignment of errors	608	590
Appeal bond (omitted in printing)	614	
Order re physical exhibits	616	596
Order extending time	617	597
Citation and service (omitted in printing)	617	
Order approving narrative form of testimony	618	598
Order extending time	619	598
Defendant's præcipe for record	619	598
Clerk's certificate (omitted in printing)	621	
Proceedings in C. C. A., Sixth Circuit	622	600
Argument and submission (omitted in printing)	622	
Order setting case for re-argument	622	600
Re-argument and submission (omitted in printing)	623	
Decree	623	600
Opinion, Raymond, J.	625	601
Petition for rehearing	639	614
Brief in support of petition for rehearing (omitted in printing)	647	
Order denying petition for rehearing	676	617
Clerk's certificate (omitted in printing)	677	

[fol. 1].

IN UNITED STATES DISTRICT COURT, WESTERN DISTRICT OF TENNESSEE, WESTERN DIVISION

In Equity

THE BASSICK MANUFACTURING COMPANY, Plaintiff,

vs.

THE R. M. HOLLINGSHEAD COMPANY, Defendant

BILL OF COMPLAINT—Filed Aug. 16, 1926

Plaintiff, for complaint against defendant, alleges as follows:

(1) Plaintiff, The Bassick Manufacturing Company, is a corporation organized and existing under and by virtue of the laws of the State of Delaware, a citizen of Delaware, having its principal place of business at Chicago, and a resident of Chicago, in the County of Cook, and State of Illinois.

(2) Defendant, The R. M. Hollingshead Company, is a corporation organized and existing under and by virtue of the laws of the State of New Jersey, having a regular and established place of business at Memphis, Shelby County, Tennessee, within the Western District of Tennessee, Western Division, within which District and Division it has committed acts of infringement of plaintiff's patent, of which complaint is made herein.

(3) Arthur V. Gullborg, a citizen of the Untied States, being prior to December 21, 1918, the original, first and sole inventor of certain new and useful improvements in Lubricating Means, lawfully filed and prosecuted an application for United States patent therefor, and, having complied in all respects with the statutes and the rules of the Patent Office, United States patent No. 1,307,734 was lawfully granted and issued pursuant to said applicant on June 24, 1919.

(4) Said invention of Arthur V. Gullborg was new, useful, not known or used by others in this country before

his invention, not patented or described in any printed publications anywhere before his invention or more than two years prior to his application, not in public use or on sale in this country for more than two years prior to his application, not patented in any foreign country by him [fol. 2] or his legal representatives on applications filed more than one year before his said application in this country, and not abandoned. Said patent is now in full force and is hereby proffered and ready to be produced before the Court.

(5) Prior to the commencement of this suit, plaintiff became, by lawful assignments, duly recorded in the United States Patent Office, ond now is the sole owner of said United States Patent No. 1,307,734, and of all rights thereunder and of all rights of action for infringement thereof.

(6) The invention patented by said patent No. 1,307,734 is of great utility and is of great value to plaintiff and of great benefit to the public. Plaintiff and its predecessors have very extensively sold and introduced into public use devices in which said patented invention is embodied, and the public and manufacturers have demanded and purchased from plaintiff and its predecessors such devices embodying said inventions in very large and in very rapidly increasing quantities.

(7) Plaintiff and its predecessors have complied with the United States statutes relating to marking patented devices sold by them.

(8) The public has, in general, acknowledged the validity of the aforesaid patent No. 1,307,734, and has respected plaintiff's rights therein and thereunder.

(9) Defendant, in violation of plaintiff's rights under said patent No. 1,307,734, and without any authority since the issuance of said patent, and within six years before the commencement of this suit within the District aforesaid and elsewhere in the United States, has threatened to infringe and has infringed said patent No. 1,307,734 by using and selling lubricating apparatus embodying said patented invention, and by using and selling devices designed and intended for use in apparatus embodying said patented invention. Defendant threatens to continue to commit acts in violation of plaintiff's rights and in infringement of said patent, whereby plaintiff has been and

will be greatly and irreparably damaged, and whereby defendant is about to obtain large profits, which in equity will belong to plaintiff, the amount of which damages and profits plaintiff cannot ascertain except by an accounting.

Plaintiff therefore prays:

(a) That defendant be required to answer this Bill of Complaint, but not under oath, answer under oath being hereby expressly waived.

(b) That the court grant a temporary restraining order, [fol. 3] a preliminary injunction pending his suit, and a perpetual injunction restraining the defendant, its agents, employes, associates and confederates, enjoining them from making, using or vending the combinations patented in said patent or any of the parts thereof or any other devices embodying the inventions described and claimed in said patent, or adapted to be used in systems or combinations embodying the same, and from offering or advertising so to do, and from aiding or abetting or in any way contributing to the infringement of said patent.

(c) That this cause be referred to a Master to make and report an account of damages and profits, accruing from defendant's infringement of said patent, and that plaintiff have judgment for the damages and profits so found and for the costs of this suit.

(d) That plaintiff have such other and further relief as equity may require.

The Bassick Manufacturing Company, by J. E. Otis, Jr., Vice-President. Lyman A. Williams, Williams, Bradbury, McCaleb & Hinkle, Solicitors for Plaintiff.

Duly sworn to by J. E. Otis, Jr. Jurat omitted in printing.

[fol. 4] IN UNITED STATES DISTRICT COURT

ANSWER—Filed Sept. 7, 1926

To the Honorable Judges of the above entitled court:

The answer of the above entitled defendant to the Bill of Complaint exhibited against it by the above named plaintiff.

1. Defendant has no information as to whether or not plaintiff is incorporated, organized and existing under and by virtue of the laws of the State of Delaware, whether it is a citizen of Delaware, whether it has its principal place of business at Chicago, and whether it is a resident of Chicago, County of Cook, in the State of Illinois, and therefore denies the same and leaves plaintiff to make full proof thereof.

2. Defendant admits the averments of its existence and organization under the laws of the State of New Jersey, and as to its having a regular and established place of business at Memphis, Shelby County, Tennessee.

3. Defendant denies having committed any act of infringement complained of either within the Western District of Tennessee, Western Division, or elsewhere.

4. Defendant admits that Arthur V. Gullborg on December 21, 1918 filed application for Letters Patent in the United States on certain alleged new and useful improvements in Lubricating Means, and that Letters Patent of the United States numbered 1,307,734, were granted on said application on June 24, 1919; but defendant denies that at the date of filing said application said Arthur V. Gullborg was a citizen of the United States, and denies each and every other allegation contained in the third paragraph of the bill, respecting the inventorship of Arthur V. Gullborg, and denies particularly that prior to the filing of said application for letters patent he, said Arthur V. Gullborg, was the original, first and sole inventor of the subject matter disclosed and claimed therein, denies that said application was lawfully filed and prosecuted by him and that the statutes and rules of the Patent Office were complied with in the filing and prosecution of said application and issuance of Letters Patent thereon, and leaves plaintiff to make full proof thereof.

5. Defendant denies each and every allegation contained in the fourth paragraph of the Bill of Complaint and particularly denies that said alleged invention or any part thereof, was in fact an invention, that the subject matter thereof was new or useful or not known or used in the country before the alleged invention thereof by said Arthur V. Gullborg, denies that the same was not patented or [fol. 5] described in any printed publication anywhere be-

fore his alleged invention thereof, or more than two years prior to his said application, denies that the same was not in public use or on sale in this country for more than two years prior to said application, or not patented in any country by him or his legal representatives on an application filed more than one year before his said application in this country, and not abandoned, and therefore denies that said patent is now in full force.

6. Defendant is not advised as to whether or not plaintiff is now the sole owner of said letters patent of the United States No. 1,307,734, and of all rights therein and all rights of action for infringment thereof, as alleged, and therefore denies the same and leaves plaintiff to make full proof thereof.

7. Defendant denies each and every allegation contained in the sixth paragraph of the bill, and particularly denies that the alleged invention patented by said letters patent No. 1,307,734, is of great utility and of great value to the plaintiff and of great benefit to the public; denies that plaintiff and its predecessors have extensively sold and introduced into public use devices embodying the same, and denies that there has been a very large and rapidly increasing demand therefor.

8. Defendant denies that plaintiff and its predecessors have marked all devices embodying said alleged invention in full compliance with the statutes of the United States, as alleged in the seventh paragraph of the bill.

9. Defendant denies each and every allegation contained in paragraph eight of the bill, and particularly denies that the public has generally acknowledged the validity of said letters patent, or respected or recognized any rights of plaintiff therein and thereunder, and avers the contrary to be true and that said letters patent have been generally regarded as invalid and inoperative and without legal effect.

10. Defendant denies each and every allegation of the ninth paragraph of the bill and particularly denies that it has violated any right secured to plaintiff under said letters patent No. 1,307.734, at any time or at any place, denies having infringed said letters patent, denies any intention or threats of violation of any right of plaintiff under

said letters patent, denies that plaintiff has been or will be damaged as alleged, and denies that defendant is about to obtain any profits accruing in equity to the plaintiff.

11. And in further answer to the Bill of Complaint, and [fol. 6] as an additional and separate defense in its behalf, defendant alleges that, for the purpose of deceiving the public, the description and specification filed by the patentee in the Patent Office as a part of the application on which patent No. 1,307,734 was issued, was made to contain, in certain respects, less than the whole truth relative to the alleged invention, and in other respects was made to contain irrelevant matter, which in no way contributed in producing the desired effect; wherefore, the said letters patent are void and of no legal effect.

12. As an additional and separate defense in its behalf, defendant alleges that Arthur V. Gullborg was not the original, first and sole inventor of the subject-matter disclosed and claimed in said letters patent, but that he surreptitiously or unjustly obtained said letters patent, for that which was in fact invented by others, who were using reasonable diligence in adapting and perfecting the same, wherefore, said letters patent are void and are of no legal effect.

13. And as an additional and separate defense in its behalf, defendant alleges that the subject-matter disclosed and claimed in said letters patent, or all material and substantial parts thereof, had been patented or described in printed publications long prior to the supposed invention or discovery by the said Arthur V. Gullborg, or for more than two years prior to his application for Letters Patent therefor, particularly in the specifications, drawings and claims of the below identified letters patent, and that therefore, said Letters Patent sued upon are null and void:

United States Patents

8,251, Richardson, July 29, 1851:
Re. 10,064, Skinner, Mar. 21, 1882;
Re. 14,667, Winkley, June 10, 1919;
Re. 15,503, Piquerez, Dec. 5, 1922;
149,728, Diehl et al., April 14, 1874;
165,391, Warker, July 6, 1875;

182,675, Johnson, Sept. 26, 1876;
199,312, Perkins, Jan. 15, 1878;
241,500, Marks et al., May 17, 1881;
242,141, Laskey et al., May 31, 1881;
242,564, Sholder, June 7, 1881;
249,194, Marks, Nov. 8, 1881;
263,415, Lightburne, Aug. 29, 1882;
308,843, Kelsey, Dec. 2, 1884;
383,360, Kiefer, May 22, 1888;
[fol. 7] 418,225, Rice, Dec. 31, 1889;
456,295, Stedman, July 21, 1891;
458,636, Meilink et al., Sept. 1, 1891;
537,439, Conley, Apr. 16, 1895;
605,238, Sutfin, June 7, 1898;
610,359, Lees, Sept. 6, 1898;
615,623, King, Dec. 6, 1898;
617,591, Miller, Jan. 10, 1899;
623,135, Cordeau, Apr. 18, 1899;
667,096, Lippincott, Jan. 29, 1901;
679,005, Prouty, July 23, 1901;
692,795, Moyle, Feb. 4, 1902;
739,624, Traver, Sept. 22, 1903;
793,869, Anderson, July 4, 1905;
798,441, Nelson, Aug. 29, 1905;
807,985, Alden, Dec. 19, 1905;
810,959, Marmon, Jan. 30, 1906;
838,219, Stapley, Dec. 11, 1906;
863,878, Reimund, Aug. 20, 1907;
864,079, Coleman, Aug. 20, 1907;
919,743, Mason, Apr. 27, 1909;
921,691, Friday, May 18, 1909;
928,797, Rohrbacker, July 20, 1909;
937,682, MacClyment, Oct. 19, 1909;
939,036, Koper, Nov. 2, 1909;
950,263, Harpster, Feb. 22, 1910;
951,889, Teuer, Mar. 15, 1910;
976,787, Donnelly, Nov. 22, 1910;
983,095, Townsend, Jan. 31, 1911;
988,422, Wilson, Apr. 4, 1911;
1,017,654, De Grey, Feb. 20, 1912;
1,020,167, Vesey, Mar. 12, 1912;
1,027,588, Brown, May 28, 1912;
1,042,627, Watson, Oct. 29, 1912;

1,051,805, Danberg, Jan. 28, 1913;
1,117,762, Barcus, Nov. 17, 1914;
1,141,101, Brown, June 1, 1915;
1,150,420, Davis et al., Aug. 17, 1915;
1,166,643, Wayne, Jan. 4, 1916;
1,170,752, Hodges, Feb. 8, 1916;
1,189,191, Charroin, June 27, 1916;
1,194,793, Styers, Aug. 15, 1916;
1,201,414, Winkley, Oct. 17, 1916;
1,205,686, Uhl, Nov. 21, 1916;
1,207,739, Frazier et al., Dec. 12, 1916;
1,213,518, McEwen, Jan. 23, 1917;
1,244,925, Wahl, Oct. 30, 1917;
1,248,526, Morse, Dec. 4, 1917;
[fol. 8] 1,249,142, Lotz, Dec. 4, 1917;
1,253,309, Ulleland, Jan. 15, 1918;
1,276,108, Piquerez, Aug. 20, 1918;
1,304,576, Kraft, May 27, 1919;
1,304,814, Schweinert, May 27, 1919;
1,364,147, Spahr, Jan. 4, 1921;
1,367,250, DuPont, Feb. 15, 1921;
1,494,652, Wallace, May 20, 1924.

British Patents

3,028, Seng, 1915;
26,134, Sharpe, 1912;
21,893, Alley, 1906;
121,863, Pitkin, 1919;
172,763, Sokal, 1921.

German Patent

6,118, Better, Nov. 10, 1878.

14. And as an additional and separate defense in its behalf, defendant alleges that said Arthur V. Gullborg was not the original and first inventor or discoverer of any material and substantial part of the things patented in said letters patent, but that the same, and all material and substantial parts thereof, were previously devised by the several applicants for the letters patents identified in the next preceding paragraph herein, wherefore said letters patent, are void and of no legal effect.

15. And as an additional and separate defense in its behalf, defendant alleges that the things patented in and by said letters patent were in public use and on sale in this country for more than two years before the application of Arthur V. Gullborg, therefor, or prior to his alleged invention thereof, by the following named persons at the places indicated, to wit:

Wilson Instrument and Specialty Company at Passaic, N. J.
Clarence Wilson, 21 W. 9th Street, New York, N. Y.
Albert K. Bush, 382 Paulsion Avenue, at Passaic, N. J.
William P. Welsh, 134 Center Street, Nutley, N. J.
Chester C. Henry, Summitt, N. J.
O. K. Specialty Co., Newark, N. J.
John Swenson, 17 Madison Avenue, Clifton, N. J.
Auto Car Co., Ardmore, Pa.
White Motor Co., Cleveland, Ohio.

[fol. 9] wherefore, said letters patent are void and of no legal effect.

16. And as an additional and separate defense in its behalf, defendant alleges that the things patented in and by said letters patent, did not, at the date of said letters patent, constitute an invention patentable under the law, but were obvious aggregations of old and well known mechanical devices and expedients arranged for operation in an obvious and customary manner, and devoid of invention whereby letters patent are invalid and without legal effect.

17. Defendant further avers on information and belief that the invention of said Gullborg patent was known to and used by other persons in this and foreign countries and patented and described in other letters patent for this and other countries the prior uses and means of which persons and the numbers and dates of which letters patent are at present unknown to defendant and which when ascertained defendant prays leave to insert by amendment in its answer.

18. Defendant, further answering, avers that the claims of the letters patent sued upon cannot be construed to cover or include anything ever made, sold or used by this defendant, and that they are invalid and ineffectual for such purpose, not only in view of the state of the prior art, but also

because of the cancellations, of the declarations amounting to disclaimers, and of the express limitations and restrictions, made or assented to by said patentee in his application for said letters patent, and, moreover, made or assented to in consequence of repeated rejections and objections by the Patent Office which were acquiesced in by the applicant as a prerequisite to obtaining the allowance of his said letters patent as finally issued, all as disclosed by the file-wrapper of said letters patent, ready in court to be produced.

19. Defendant further answering says that the devices which have been sold by it, alleged to be infringements, of the Gullborg patent aforesaid, were sold for replacement and repair purposes as defendant has been advised that it had and still has the lawful right to do, defendant having in no instance furnished the fixed nipples which are a permanent part of an automobile chassis, and that defendant has therefore not sold any of said articles for purposes of a complete, new installation.

20. Defendant further avers that in the conduct of its business it has acted in conformity with the orders and decrees heretofore entered by Judge Hickenlooper in a cause now pending in the District Court of the United [fol. 10] States, Southern District of Ohio, Western Division, between this plaintiff and the Larkin Automotive Parts Company, entitled In Equity No. 74, particularly as respects an order of said court, filed July 29, 1926, in the above entitled cause and entered nunc pro tunc as of date of October 14, 1924.

All of which matters and things this defendant is ready and willing to aver, maintain and prove, as this Honorable Court shall direct, and therefore prays that the Bill of Complaint herein may be dismissed with its reasonable costs, charges and disbursements in this behalf most wrongfully sustained, and to be taxed.

The R. M. Hollingshead Co., by R. M. Bagley, Vice President. R. M. Bagley, Secretary. (Seal.) Brown & Waldauer, Solicitors and of Counsel for Defendant. Leonard L. Kalish, E. Hayward Fairbanks, of Counsel for Defendant.

Duly sworn to by R. M. Bagley. Jurat omitted in printing.

[fol. 11] IN UNITED STATES DISTRICT COURT

AMENDED BILL OF COMPLAINT—Filed Oct. 29, 1926

Plaintiff, for complaint against defendant, alleges as follows:

(1) Plaintiff, The Bassick Manufacturing Company, is a corporation organized and existing under and by virtue of the laws of the State of Delaware, a citizen of Delaware, having its principal place of business at, and being a resident of, Chicago, in the County of Cook, and State of Illinois.

(2) Defendant, The R. M. Hollingshead Company, is a corporation organized and existing under and by virtue of the laws of the State of New Jersey, having a regular and established place of business at Memphis, Shelby County, Tennessee, within the Western District of Tennessee, Western Division, within which District and Division it has committed acts of infringement of plaintiff's patents, of which complaint is made herein.

(3) Arthur V. Gullborg, a citizen of the United States, being, prior to December 21, 1918, the original, first and sole inventor of certain new and useful improvements in Lubricating Means, lawfully filed and prosecuted an application for United States patent therefor, and, having complied in all respects with the statutes and the rules of the Patent Office, United States patent No. 1,307,734 was lawfully granted and issued pursuant to said application on June 24, 1919.

(4) Oscar Zerk, a citizen of the United States, being, prior to November 21, 1922, the original, first and sole inventor of certain new and useful improvements in Lubricating Apparatus, lawfully filed and prosecuted an application for United States patent therefor, and having complied in all respects with the statutes and the rules of the patent office, United States patent No. 1,475,980 was lawfully granted and issued pursuant to said application on December 4, 1923.

(5) Said inventions of Arthur V. Gullborg and Oscar Zerk were new, useful, not known or used by others in this country before their respective inventions, not patented or de-

scribed in any printed publications anywhere before their respective inventions, or more than two years prior to their respective applications, (not in public use prior to their respective applications), not patented in any foreign country by them or their legal representatives on applications filed more than one year before their said applications in this country, and not abandoned. Said patents are now in full [fol. 12] force and are hereby proffered and ready to be produced before the Court.

(6) Prior to the commencement of this suit, plaintiff became, by lawful assignments duly recorded in the United States Patent Office, and now is, the sole owner of said United States Patents Nos. 1,307,734 and 1,475,980 and of all rights thereunder and of all rights of action for infringement thereof.

(7) The inventions patented by said patents Nos. 1,307,734 and 1,475,980 are of great utility and are of great value to plaintiff and of great benefit to the public. Plaintiff and its predeecessors have very extensively sold and introduced into public use devices in which said patented inventions are embodied, and the public and manufacturers have demanded and purchased from plaintiff and its predecessors such services embodying said inventions in very large and in very rapidly increasing quantities.

(8) Plaintiff and its predecessors have marked all devices embodying said inventions, made or sold by them, in full compliance with the United States statutes.

(9) The public has, in general acknowledged the validity of the aforesaid patents Nos. 1,307,734 and 1,475,980, and has respected plaintiff's rights therein and thereunder.

(10) Defendant, in violation of plaintiff's rights under said patents Nos. 1,307,734 and 1,475,890 and without any authority since the issuance of said patents, and within six years before the commencement of this suit within the Western District of Tennessee, Western Division, and elsewhere in the United States, has infringed said patents Nos. 1,307,734 and 1,475,980 by using and selling lubricating apparatus embodying said patented inventions, and by using and selling devices designed and intended for use in apparatus embodying said patented inventions. Defendant

threatens to continue to commit acts in violation of plaintiff's rights and in infringement of said patents, whereby plaintiff has been and will be greatly and irreparably damaged, and whereby defendant is about to obtain large profits, which in equity will belong to plaintiff, the amount of which damages and profits plaintiff cannot ascertain except by an accounting.

Plaintiff therefore prays:

(a) That defendant be required to answer this amended Bill of Complaint, but not under oath, answer under oath being hereby expressly waived.

(b) That the court grant a preliminary injunction pending this suit, and a perpetual injunction restraining the de-
[fol. 13] fendant, its officers, agents, employes, associates and confederates, enjoining them from making, using or vending the combinations patented in said patents or any of the parts thereof or any other devices embodying the inventions described and claimed in either of said patents or adapted to be used in systems or combinations embodying the same, and from offering or advertising so to do, and from aiding or abetting or in any way contributing to the infringement of said patents or either of them.

(c) That this cause be referred to a Master to make and report an account of damages and profits, accruing from defendant's infringement of said patents, and that the damages reported be increased threefold in view of the wanton character of defendant's infringement, and that plaintiff have judgment for the damages and profits so found and for the costs of this suit.

(d) That plaintiff have such other and further relief as equity may require.

The Bassick Manufacturing Company, J. E. Otis, Jr., Vice President. Lowell W. Taylor, Lynn A. Williams, Williams, Bradbury, McCaleb & Hinkle, Solicitors for Plaintiff.

Duly sworn to by J. E. Otis, Jr. Jurat omitted in printing.

[fol. 14] IN UNITED STATES DISTRICT COURT

ANSWER TO AMENDED BILL OF COMPLAINT—Filed May 2, 1927

To the Honorable Judges of the above entitled Court:

The answer of the above entitled defendant to the Amended Bill of Complaint exhibited against it by the above named plaintiff.

1. Defendant has no information as to whether or not plaintiff is incorporated, organized and existing under and by virtue of the laws of the State of Delaware, whether it is a citizen of Delaware, whether it has its principal place of business at Chicago, and whether it is a resident of Chicago, County of Cook, in the State of Illinois, and therefore denies the same and leaves plaintiff to make full proof thereof.

2. Defendant admits the averments of its existence and organization under the laws of the State of New Jersey, and as to its having a regular and established place of business at Memphis, Shelby County, Tennessee.

3. Defendant denies having committed any act of infringement complained of either within the Western District of Tennessee, Western Division, or elsewhere.

4. Defendant admits that Arthur V. Gullborg on December 21, 1918, filed application for Letters Patent in the United States on certain alleged new and useful improvements in Lubricating Means, and that Letters Patent of the United States, numbered 1,307,734, were granted on said application on June 24, 1919; but defendant denies that at the date of filing said application said Arthur V. Gullborg was a citizen of the United States, and denies each and every other allegation contained in the third paragraph of the bill, respecting the inventorship of Arthur V. Gullborg, and denies particularly that prior to the filing of said application for letters patent he, said Arthur V. Gullborg, was the original, first and sole inventor of the subject matter disclosed and claimed therein, denies that said application was lawfully filed and prosecuted by him and that the statutes and rules of the Patent Office were complied with in the filing and prosecution of said application and issuance of Letters Patent thereon, and leaves plaintiff to make full proof thereof.

5. Defendant denies that Oscar Zerk, prior to November 21st, 1922, was a citizen of the United States, and denies that said Zerk was the original, first and sole inventor of certain new and useful improvements in Lubricating Apparatus, and denies that he lawfully filed and prosecuted an application for United States patent therefor, and [fol. 15] denies that he complied in all respects with the statutes and the rules of the Patent Office, and denies that patent No. 1,475,980 was lawfully granted and issued pursuant to said application on December 4, 1923.

6. Defendant denies each and every allegation in the fifth paragraph of the bill, and particularly denies that said alleged inventions or any part thereof, were in fact inventions, that the subject matter thereof was new or useful or not known or used in this country before the alleged inventions thereof by said Arthur V. Gullborg and Oscar Zerk, denies that the same were not patented or described in any printed publication anywhere before their alleged invention thereof, or more than two years prior to their said applications, denies that the same were not in public use or on sale in this country for more than two years prior to said applications, or not patented in any country by them or their legal representatives on applications filed more than one year before their said applications in this country, and not abandoned, and therefore denies that said patents are now in full force.

7. Defendant is not advised as to whether or not plaintiff is now the sole owner of said United States letters patent here in suit, and of all rights therein and all rights of action for infringement thereof, as alleged, and therefore denies the same and leaves plaintiff to make full proof thereof.

8. Defendant denies each and every allegation contained in the seventh paragraph of the bill, and particularly denies that the alleged inventions patented by said letters patent in suit, are of great utility and of great value to the plaintiff and of great benefit to the public; denies that plaintiff and its predecessors have extensively sold and introduced into public use devices embodying the same, and denies that there has been a very large and rapidly increasing demand therefor.

9. Defendant denies that plaintiff and its predecessors have marked all devices embodying said alleged inventions in full compliance with the statutes of the United States, as alleged in the eighth paragraph of the bill, and defendant further avers that it received no notice of the existence of the patents here in suit prior to the filing of the bill.

10. Defendant denies each and every allegation in paragraph nine of the bill and particularly denies that the public has generally acknowledged the validity of the said Letters Patent, or respected or recognized any rights of plaintiff therein and thereunder, and avers the contrary to [fol. 16] be true and that said letters patent have been generally regarded as invalid and inoperative and without legal effect.

11. Defendant denies each and every allegations of the tenth paragraph of the bill and particularly denies that it has violated any right secured to plaintiff under said Letters Patent in suit, at any time or at any place, and denies having infringed said letters patent, denies any intention or threats of violation of any right of plaintiff under said letters patent, denies that plaintiff has been or will be damaged as alleged, and denies that defendant is about to obtain any profits accruing in equity to the plaintiff.

12. As an additional and separate defense in its behalf, defendant alleges that Arthur V. Gullborg, and Oscar Zerk, were not the original, first and sole inventors of the subject-matter disclosed and claimed in said letters patent, but that they surreptitiously or unjustly obtained said letters patent, for that which was in fact invented by others, who were using reasonable diligence in adapting and perfecting the same, wherefore, said letters patent are void and are of no legal effect.

13. Defendant further avers that the subject-matter disclosed and claimed in said Letters Patent to Gullborg, No. 1,307,734, or all material and substantial parts thereof, had been patented or described in printed publications long prior to the supposed invention or discovery by the said Arthur V. Gullborg, or for more than two years prior to his application for Letters Patent therefor, particularly in the specifications, drawings and claims of the following Letters Patent, and that therefore, said Letters Patent sued upon are null and void:

No. 8,251 to Richardson, July 29, 1851;
No. 182,675 to Johnson, Sept. 26, 1876;
No. 456,295, Stedman, July 21, 189-;
No. 810,959, Marmon, Jan. 30, 1906;
No. 937,682, MacClyment, Oct. 19, 1909;
No. 117,762, Barcus, Nov. 17, 1914;
No. 1,150,420, Davis, Aug. 17, 1915;
Reissue, No. 14,667, Winkley, June 10, 1919;
No. 242,141, Laskey, May 31, 1881;
British patent to Alley, No. 21,893, of 1906;
French patent to Seng, No. 468,869, of 1914;
French patent to Seng (addition) No. 20,083 of 1916.

14. Defendant further avers that the subject-matter disclosed and claimed in said Letters Patent to Oscar [fol. 17] Zerk, No. 1,475,980, or all material and substantial parts thereof, had been patented or described in printed publications long prior to the supposed invention or discovery by the said Oscar Zerk, or for more than two years prior to his application for Letters Patent therefor, particularly in the specifications, drawings and claims of the following Letters Patent, and that therefore, said Letters Patent sued upon are null and void:

No. 1,494,652, Wallace, May 20, 1924;
No. 1,459,662, Manzel, June 19, 1923;
No. 1,416,668, Abbott, May 23, 1904;
British patent to Clarkson, No. 6,940 of 1904;
White Motors Co. Cleveland, Ohio.

15. And as an additional and separate defense in its behalf, defendant alleges that said Arthur V. Gullborg was not the original and first inventor or discoverer of any material and substantial parts of the things patented in said Letters Patent, but that the same, and all material and substantial parts therefor, were previously devised by the several applicants for the Letters Patents identified in the next preceding paragraph herein, wherefore said Letters Patent, are void and of no legal effect.

16. And as an additional and separate defense in its behalf, defendant alleges that the things patented in and by said Letters Patent were in public use and on sale in this

country for more than two years before the applications of Arthur V. Gullborg and Oscar Zerk, therefor, as prior to their alleged inventions thereof, by the following named persons at the places indicated, to wit:

Wilson Instrument and Specialty Company, at Passaic, N. J.
Clarence Wilson, 21 W. 9th Street, New York, N. Y.
Albert K. Bush, 382 Paulsion Avenue, at Passaic, N. J.
William P. Welsh, 134 Center Street, Nutley, N. J.
Chester C. Henry, Summit, N. J.
O. K. Specialty Co., Newark, N. J.
John Swenson, 17 Madison Avenue, Clifton, N. J.
Auto Car Co., Ardmore, Pa.
White Motor Co., Cleveland, Ohio.

wherefore, said Letters Patent are void and of no legal effect.

17. And as an additional and separate defense in its [fol. 18] behalf, defendant alleges that the things patented in and by said Letters Patent, did not, at the date of said Letters Patent, constitute an invention patentable under the law, but were obvious aggregations of old and well known mechanical devices and expedients arranged for operation in an obvious and customary manner, and devoid of invention whereby Letters Patent are invalid and without legal effect.

18. Defendant further avers on information and belief that the inventions of said Gullborg and Zerk patents were known to and used by other persons in this and foreign countries and patented and described in other Letters Patent for this and other countries, the prior uses and names of which persons and the numbers and dates of which Letters Patent are at present unknown to defendant and which when ascertained defendant prays leave to insert by amendment in its answer.

19. Defendant, further answering, avers that the claims of the Letters Patent sued upon cannot be construed to cover or include anything ever made, sold or used by this defendant, and that they are invalid and ineffectual for such purpose, not only in view of the state of the prior art, but also because of the cancellations, of the declarations amounting to disclaimers, and of the express limitations

and restrictions, made or assented to by said patentees in their application for said Letters Patent, and moreover, made or assented to in consequence of repeated rejections and objections by the Patent Office which were acquiesced in by the applicants as a prerequisite to obtaining the allowance of their said Letters Patent as finally issued, all as disclosed by the file wrappers of said Letters Patent, ready in Court to be produced.

20. Defendant further answering says that the devices which have been sold by it, alleged to be infringements, of the Gullborg and Zerk patents aforesaid, were sold for replacement and repair purposes as defendant had been advised that it had the lawful right to do, defendant having in no instance furnished the fixed nipples which are a permanent part of an automobile chassis, and that defendant has therefore not sold any of said articles for purposes of a complete, new installation.

All of which matters and things this defendant is ready and willing to aver, maintain and prove, as this Honorable Court shall direct, and therefore prays that the Bill of Complaint herein may be dismissed with its reasonable costs, [fol. 19] charges and disbursements in this behalf most wrongfully sustained, and to be taxed.

The R. M. Hollingshead Co., by R. M. Bagley, Vice President. Attest: A. T. Reech, Secretary. (Seal.) R. G. Brown and A. D. Waldauer, Solicitors and of Counsel for Defendant. Leonard L. Kalish, E. Hayward Fairbanks, of Counsel for Defendant.

Duly sworn to by R. M. Bagley. Jurat omitted in printing.

IN UNITED STATES DISTRICT COURT

AFFIDAVIT OF D. A. BEEZLEY—Filed Oct. 29, 1926

STATE OF TENNESSEE,
Shelby County:

D. A. Beezley being first duly sworn deposes and says:

I am engaged in the automobile repair business in the [fol. 20] city of Memphis and operate a garage at 453 Monroe Ave. On the second day of April, 1926, a representa-

tive of the R. M. Hollingshead Company called on me for the purpose of selling me a Service Compressor, this being in response to a request made by me over the telephone. When the representative, Mr. Whittaker arrived the following conversation took place:

Beezley: "I have a number of customers whose cars are equipped with Alemite and Zerk lubricating system and I want to get a Service Compressor that I can use to grease these cars."

Whittaker: "I have just what you want—I have a gun in all respects superior to the Alemite gun and which will fit Alemite and Zerk fittings for about one half the cost of the Alemite gun." I will send out a gun and a man to demonstrate it to you."

Beezley: "I also want to buy some fittings, but I cannot compete with the Alemite people, for I cannot pay the price they ask for the Alemite fittings."

Whittaker: "We do not handle the fittings, but we have a representative, Mr. R. J. Martinetti who is connected with a company that handles these fittings. I will have him call on you and sell you some."

Mr. Whittaker sent me one of the Service Compressors on April 7, 1926 and also rendered me an invoice for $63.50.

I file herewith the Service Compressor as Exhibit A; duplicate of the original order as Exhibit B; original invoice as Exhibit C; and a copy of the delivery ticket as Exhibit D.

Several days after receiving the Service Compressor I called up the R. M. Hollingshead Company and requested that they send the representative who could sell me the pin fittings. He replied that he would and later in the day came by and told me they were temporarily out but that in the next few days another representative of the company, Mr. Martinetti would find out where he could get some of the fittings and get some for me. He told me that Martinetti had a line on a place where he could get these fittings and could furnish them to me. He also said Martinetti had been selling them heretofore.

(Signed) D. A. Beezley.

Subscribed and sworn before me this 12th day of April, 1926.

Gordon W. Trask, Notary Public. (Seal.) My commission expires Jan. 21, 1929.

[fol. 21] EXHIBIT B—BEEZLEY AFFIDAVIT

The R. M. Hollingshead Co.

Home Office and Factories, Camden, N. J., U. S. A.

Sold to: D. A. Beezley. File No.: —. Date: 4/2/26.
Trading as "Beezley, The Brake Man."
Town: Memphis. State: Tenn.
Street: 453 Monroe. County: Shelby. Business: Brakes.
Post Office: Memphis. R. F. D.: ——
Sold Before? (State "Yes" or "No.") No.
Railroad Station (If other than Town Address): ——.
Via ——.
Ship: ("At Once" or "Specify Date"): At once.

Office use only	Quantity	Size	Article	Price	Office use only
	1 only		High pressure chassis lubrication	63.50	
	1 "		Grease loader		

References: Auburn Alestar Co., Standardized Part Co., M. J. Lovett (Grocery).

State here any conditions affecting this order: ⅓ due each 30 days beginning 3/10/26.

Terms: 30 days Net; 2% 10 days from date of invoice; F. O. B. shipping point. (Fill in here point from which shipment is to be made.) Net Amount of Sale, $——.

Should it be necessary to communicate in reference to this order please address the office checked at the top.

A complete list of products manufactured by us appears on the back. Look the list over and see that you have everything you require before the Salesman leaves.

This order is given in good faith and duplicate left. No countermand will be accepted. It is understood that there are no conditions whatever, verbal or otherwise, except as written herein. All orders subject to the approval of the Company.

Salesman: J. P. Whitaker. Customer's Signature: D. A. Beezley.

Salesman's Order No. —.

This copy of Order to be left with Customer.

(Form 220.)

[fol. 22] EXHIBIT C—BEEZLEY AFFIDAVIT

Invoice

Form 113.

File No. 2054 Tenn. Order No. 2020 Mfs.

The R. M. Hollingshead Co.

Manufacturers of Whiz Auto Products

Florida St. and Georgia Ave., Memphis, Tenn.

Bills not paid at maturity subject to 6% interest.
Terms: 2% 10 Days; 30 Days Net.
Claims for damage or shortage to be allowed must be accompanied by freight receipt with notation of Claim entered thereon by Freight Agent.

21 16 Due 5-10-26
21 16 Due 6-10-26
21 18 Due 7-10-26

D. A. Beezley, Beezley the Brake Man, 453 Monroe Ave., Memphis, Tenn., Shelby Co.

Salesman: Whitaker. Am't: [redacted].
Salesman's Order No. —. Customer's Order No. —.
Please detach and retain lower portion of Invoice. When you remit send us only the upper part. Your cancelled check will be your receipt.

Shipping Instructions: Ship to: As above. Routing: Truck. F. O. B. Memphis. (Stamped in red): Shipped from Memphis Branch, Apr. 8, 1926. Mail remittance to Georgia Ave. & Florida St., Memphis Tenn.

Office References: Date rec'd: 4-2-26. Sold before: No. —. Date taken: 4-2-26. C. Code: 6350, 835. Business: Brakes. When to ship: At once.

1 Only	Whiz High Pressure Chassis Lubricator, Model "C"	60.00	60.00
1 Only	Whiz Grease Loader	3.50	3.50
			63.50

(Stamped in Red): Special—Save Your Discount. You will save $1.27 if your check for $62.23 is received on or before 4-12-26. 2% 10 days, 30 days net—72% per year.

[fol. 23] 1 only Side Walk Sign—Whiz Gear Grease.
2 only Angle Signs—Whiz Gear Grease.
W.

(Stamped in Red): Positively No Goods Sold on Consignment or Returnable without Written Authority from this Office.

Notice—All goods sold F. O. B. Memphis, Tenn. No freight allowance.

We hereby guarantee that the merchandise covered by this invoice has been produced or manufactured in accordance with the Federal Child Labor Act of September 1st, 1916.

The R. M. Hollingshead Co.

[fol. 24] EXHIBIT D— BEEZLEY AFFIDAVIT

Uniform Domestic Straight Bill of Lading Adopted by Carries in Official, Southern and Western Classification Territories, March 15, 1922

If this shipment is to be delivered to the consignee without recourse on the consignor, the consignor shall sign the following statement:

The carrier shall not make delivery of this shipment without payment of freight and all other lawful charges. (See section 7 of conditions.) —— ——, (Signature of Consignor.)

If charges are to be prepaid write or stamp here, "To be Prepaid."

Received $——, to apply in prepayment of the charges on the property described hereon. —— ——, Agent or Cashier, per —— ——. (The signature here acknowledges only the amount prepaid.)

Charges advanced: ——.

This Memorandum is an acknowledgement that a bill of lading has been issued and is not the Original Bill of Lading nor a copy or duplicate covering the property named herein, and is intended solely for filing or record.

Received, subject to the classifications and tariffs in effect on the date of the receipt by the carrier of the property described in the Original Bill of Lading, from The R. M. Hollingshead Co., 21856, the property described below, in apparent good order, except as noted (contents and condition of contents of packages unknown), marked, consigned, and destined as indicated below, which said company (the word company being understood throughout this contract as meaning any person or corporation in possession of the property under the contract) agrees to carry to its usual place of delivery at said destination, if on its own road or its own water line, otherwise to deliver to another carrier on the route to said destination. It is mutually agreed, as to each carrier of all or any of said property over all or any portion of said route to destination, and as to each party at any time interested in all or any of said property, that every service to be performed hereunder shall be subject to all the conditions not prohibited by law, whether printed or written, herein contained, including the conditions on back hereof, which are hereby agreed to by the shipper and accepted for himself and his assigns.

At Mfro. 4/7/26.
By ——.

Shipper's No. ——. Agent's No. ——. Railroad: ——.
(Mail or street address of consignee—for purposes of notification only:)
Consigned to: Beezley, The Brake Man.
Destination: 453 Monroe.
State of ——. County of ——.
Route: ——. Car Initial: ——. Car No. ——.

[fol. 25]

No. packages	Description of articles, special marks and exceptions	Weight sub. to correct'n	Class or rate	Check column
	Cases Soap (20c) Max'm Value Per Lb.			
	Bbls. Soap (20c) Max'm Value Per Lb.			
	Kegs Soap (20c) Max'm Value Per Lb.			
	Drum Petroleum Lubricating Oil			
	Cases Petroleum Lubricating Oil in Tin			
	Cases Petroleum Lubricating Grease, in Cans			
	Drum Petroleum Lubricating Grease			
	Kegs Petroleum Lubricating Grease			
	Drum Petroleum Harness Oil			
	Cases Petroleum Harness Oil in Tin			
	Cases Liquid Glue in Tin			
	Cases Metal Cutting Compound Paste			
	Hand Truck Without Stds.			
	Cases Meas Pumps			
	Cases Paint N. O. I. B. N. no label req.			
	Cases Anti Freeze Compound			
	Cases Polishing Compound, N. O. I. B. N. red label			
	Cases Polishing Compound, N. O. I. B. N. no label			
	Cases Liquid Stove Polish, no label			
	Cases Auto Top Dressing, no label			
	Cases Liquid Shoe Dressing			
	Cases Furniture Polish in —			
	Cases Paste in Tin			
	Cases Liquid Cement, no label			
	Bbls. Harness Dressing			
	Cases Harness Dressing in tin			
1	only Whiz Lubricator.			
1	" Refiller.			

This is to certify that the above articles are properly described by name, and are packed and marked and are in proper condition for transportation, according to the regulations prescribed by the Interstate Commerce Commission.

* If the shipment moves between two ports by a carrier by water, the law requires that the bill of lading shall state whether it is "carrier's or shipper's weight."

Note—Where the rate is dependent on value, shippers are required to state specifically in writing the agreed or declared value of the property.

The agreed or declared value of the property is hereby specifically stated by the shipper to be not exceeding —— per ——.

The R. M. Hollinshead Co., Shippers, per AJH.

Permanent post-office address of shipper: ——.

—— —— Agent, per —— ——.

[fol. 26] IN UNITED STATES DISTRICT COURT

AFFIDAVIT OF O. A. CUMMING—Filed Oct. 29, 1926

O. A. Cumming, being first duly sworn, deposes and says:

I am a citizen and resident of Shelby County, and reside at 649 Landis Street.

On the 13th day of September, 1926, I went to the R. M. Hollingshead Company's place of business at the corner of Caroline and Florida Streets in the City of Memphis, to make some purchases. While there I asked the salesman, waiting on me, for a small hand greese gun, and he replied that he had just what I wanted, telling me that it was something new they had just brought out. I was in the stock room with him at the time. He took from a large case a package containing one of the guns, and exhibited it to me. After inspecting the gun, I told him it was just what I wanted, and bought it. He billed it to me at fourteen dollars and fifty cents ($14.50). I paid the bill and took the compressor with me.

I file herewith as Exhibit "A" the shop compressor, together with metal hose, bayonet coupling, and Zerk adapter. The package in which I received the compressor contained a white cardboard with instructions. I file that card as Exhibit "B". I file the invoice rendered to me by the R. M. Hollingshead Company, as Exhibit "C".

O. A. Cumming.

Sworn to and subscribed before me this the 13th day of September, 1926.

W. E. Krafft, Notary Public. (Seal.) My commission expires Jan. 20th, 1930.

[fol. 27] EXHIBIT B—CUMMING AFFIDAVIT

Instructions for Filling and Operating Whiz High Pressure Grease Gun, No. 20

To Fill Barrel of Gun

1. Remove hose or Ball Joint Connector.
2. Remove Booster head from barrel of gun.
3. Hold gun barrel in left hand. Shove handle of piston rod in as far as it will go.

4. Hold piston rod latch down against cap of gun with thumb of left hand.

5. Insert open end of gun barrel in the lubricant several inches. At the same time with the right hand slowly pull piston rod outward all the way. This loads the gun. Remove thumb to release piston rod latch.

6. Twist gun barrel to break suction and thus retain load in the gun barrel before removing barrel from the lubricant.

7. If you do not get a full load of lubricant the first time, retain the part of load and repeat filling operation.

8. Wipe off excess lubricant around mouth of gun barrel.

9. Screw Booster head on barrel being careful not to strip the threads.

10. Out stroke the lever handle of pump head all the way.

11. Hold barrel of gun in left hand with lever out all the way. Place head of gun against something firm to give you support. Then push in with palm of right hand on handle at end of piston rod to compress lubricant in gun barrel and advance it to Booster head.

12. Operate the pump lever several full strokes. Do not hammer on handle of piston rod. To do so would injure the gun.

13. Replace Hose of Ball Joint Connector.

14. Unless there are air pockets in the lubricant, the gun should now discharge galore at each stroke of the pump lever.

[fols. 28 & 29] To Discharge Air

Unscrew Booster head a few threads which should be just enough to permit air to escape through the threads as you push in on the handle at end of piston rod. It may be necessary to push the handle of piston rod several times before all the air will escape. After air has thus been removed, be sure to screw gun head on tight before again operating.

The Whiz High Pressure Grease Gun will develop a pressure of 8,000 to 10,000 pounds by working the lever on Booster head at full stroke.

The one thing which will prevent satisfactory operation of this pump is the presence of air pockets. This should be avoided by carefully following directions as above. To fill the gun barrel with paddle or stick is almost certain to forms air pockets.

Screw ball point coupling on end of gun, operate pump lever until lubricant fills ball joint coupling and you are ready to use the equipment.

For Alemite Fittings

For lubricating Alemite fittings the (2 joint) ball jointed hose with Coupling Assembly for Alemite fittings should be used.

For Dot Fittings

Attach Dot Coupling Assembly to fitting on car. Attach (2 joint) ball jointed hose to Alemite fitting on the end of Dot Coupling Assembly and operate the booster as a pump. The Dot Coupling Assembly must be held tightly screwed to the fitting on the car, to prevent force of grease unscrewing same. Dot Coupling will be furnished for $3.50.

For Zerk Fittings

Unscrew (2 joint) ball jointed hose from high pressure booster assembly and replace with Zerk Coupling Assembly.

The R. M. Hollingshead Co., General Offices and Factories, Camden, N. J., U. S. A. Branches in Principal Cities.

Printed in U. S. A.

[fol. 30] EXHIBIT C—CUMMING AFFIDAVIT

Uniform Domestic Straight Bill of Lading, Adopted by Carriers in Official, Southern and Western Classification Territories, March 15, 1922

If this shipment is to be delivered to the consignee without recourse on the consignor, the consignor shall sign the following statement:

The carrier shall not make delivery of this shipment without payment of freight and all other lawful charges. (See section 7 of conditions.) —— ——. (Signature of Consignor.)

If charges are to be prepaid write or stamp here, "To be Prepaid."

Received $——, to apply in prepayment of the charges on the property described hereon. —— ——, Agent or Cashier, per —— ——. (The signature here acknowledges only the amount prepaid.)

$—— Charges advanced.

This shipping order must be legibly filled in, in ink, in Indelible Pencil, or in Carbon, and ratained by the Agent.

Receive, subject to the classification and tariffs in effect on the date of the issue of this Shipping Order, from The R. M. Hollingshead Co., the property described below, in apparent good order, except as noted (contents and condition of contents of packages unknown), marked, consigned, and destined as indicated below, which said company (the word company being understood throughout this contract as meaning any person or corporation in possession of the property under the contract) agrees to carry to its usual place of delivery at said destination, if on its own road or its own water line, otherwise to deliver to another carrier on the route to said destination. It is mutually agreed, as to each carrier of all or any of said property over all or any portion of said route to destination, and as to each party at any time interested in all or any of said property, that every service to be performed hereunder shall be subject to all the conditions not prohibited by law, whether printed or written, herein contained, including the conditions on back hereof, which are hereby agreed to by the shipper and accepted for himself and his assigns.

At Mfro. 9/13/26.

By ——.

Shipper's No. 37747. Agent's No. ——. Railroad: ——.

(Mail or street address of consignee—for purposes of notification only:)

Consigned to: O. A. Co.
Destination: ——.
State of ——.
County of ——.
Route: ——.
Car Initial: ——.
Car No. ——.

[fol. 31]

No. packages	Description of articles and special marks	*Weight sub. to correct'n	Class or rate	Check column
	Cases Soap (20c) Max'm Value Per Lb.			
	Bbls. Soap (20c) Max'm Value Per Lb.			
	Kegs Soap (20c) Max'm Value Per Lb.			
	Cases Petroleum Lubricating Oil in Tin			
	Cases Petroleum Lubricating Grease, in Tin			
	Drum Petroleum Lubricating Grease, in Tin			
	Kegs Petroleum Lubricating Grease, in Tin			
	Drum Petroleum Harness Oil			
	Cases Petroleum Harness Oil in Tin			
	Cases Liquid Glue in Tin			
	Hand Truck Without Stds.			
	Cases Meas Pumps			
	Cases Steel Shelving, N. O. I. B. N., K. D., Flat			
	Cases Paint N. O. I. B. N. no label req.			
	Cases Anti Freeze Compound Liquid			
	Cases Liq. Polishing Compound, N. O. I. B. N., no label			
	Cases Liq. Auto Top Dressing, in Tin, no label			
	Cases Liquid Stove Polish, in Tin, no label			
	Cases Lea Dressing, in Tin, no label			
	Cases Liquid Cleaning Compound, no label			
	Cases Furniture Polish in —			
	Cases Paste Polish, in Tin			
	Cases Liquid Cement, in Tin, no label			
	Cases Liquid Leather Cement, in Tin, no label			
	Bbls. Harness Dressing			
	Circulars, Pamphlets.			
	Cases Prtd. Adv. Matter, Catalogues.			
1	#20 H. P. Grease Gun			14.50
3	pts. Top Dressing			1.98
				$16.48
		16.48		
	Less 2%	.33		
		16.15		

The fibre boxes used for this shipment conform to the specifications set forth in the Box Maker's Certificate thereon and all other requirements of Rule 41 of the Consolidated Freight Classification.

This is to certify that the above articles are properly described by name, and are packed and marked and are in proper condition for transportation, according to the regulations prescribed by the Interstate Commerce Commission.

If the shipment moves between two ports by a carrier by water, the law requires that the bill of lading shall state whether it is "carrier's or shipper's weight."

Note—Where the rate is dependent on value, shippers are required to state specifically in writing the agreed or declared value of the property.

The agreed or declared value of the property is hereby specifically stated by the shipper to be not exceeding.

—— per ——.

The R. M. Hollinshead Co., Shippers, per AJH.
Permanent post-office address of shipper: ——.

Agent must detach and retain this Shipping Order and must sign the Original Bill of Lading.

[fol. 32] In United States District Court

Order Granting Leave to Defendant to Amend Answer—Filed Dec. 16, 1927

This cause came on this day to be heard on motion of defendant for leave to amend its answer, which amendment was exhibited to the Court and to counsel for the plaintiff, and the Court having considered the same is pleased to order and doth now order and adjudge that leave be and it is now hereby given to defendant to file said amendment to its answer.

H. B. Anderson, Judge. O. K., Lowell W. Taylor, for Plaintiff. H. A. Minor, for Deft.

In United States District Court

Amendment to Answer—Filed Dec. 15, 1927

Now comes defendant by leave of Court obtained, and amends its Answer heretofore filed, as follows:

On page 4 of the Answer cancel the list of prior art patents at the end of paragraph 13 and insert in place thereof the following:

Richardson, No. 8,251, July 29, 1851;
Johnson, No. 182,675, Sept. 26, 1876;
Laskey, No. 242,141, May 31, 1881;
Sholder, No. 242,564, June 7, 1881;
Marks et al., No. 249,194, Nov. 8, 1881;
Stedman, No. 456,295, July 21, 1891;
Lees, No. 610,359, Sept. 6, 1898;
Lang, No. 905,717, Dec. 1, 1908;
Mason, No. 919,743, Apr. 27, 1909;
[fol. 33] Dupre, No. 927,337, July 6, 1909;
MacClyment, No. 937,682, Oct. 19, 1909;
Townsend, No. 983,095, Jan. 31, 1911;
Wilson, No. 988,422, Apr. 4, 1911;
Brown, No. 1,027,588, May 28, 1912;
Danberg, No. 1,051,805, Jan. 28, 1913;
Barcus, No. 1,117,762, Nov. 27, 1914;
Brown, No. 1,141,101, June 1, 1915.
Davis, No. 1,150,420, Aug. 17, 1915;
Winkley, No. 1,201,414, Oct. 17, 1916;
Winkley, Reissue, No. 14,667, June 10, 1919;
Gullborg, No. 1,307,733, June 24, 1919.

British Patents.

Grey, No. 18,727, 1912;
Sharpe, No. 26,134, Nov. 4, 1912;
Alley, No. 21,893, 1906;
Seng, No. 3,028, Feb. 24, 1915.

French Patents

Chandeur, No. 421,556, Feb. 25, 1911;
Seng, No. 468,869, 1914;
Seng (Addition), No. 20,083, 1916.

Publication in the French journal "Omnia", dated April 25, 1914, 9 Annee 434, page 258.

On page 4 of the Answer, in paragraph 14, cancel the list of prior art patents and insert the following list:

Hay et al., No. 499,541, June 13, 1893;
Jacques, No. 1,383,306, July 5, 1921;
Crotty, No. 1,400,871, Dec. 20, 1921;
Abbott, No. 1,416,668, May 23, 1922;
Manzel, No. 1,459,662, June 19, 1923;
Wallace, No. 1,494,652, May 20, 1924;
Clarkson (British), No. 6,940, of 1904.

On page 6 of the Answer, after paragraph 20, insert:

"21. As an additional and separate defense in its behalf, defendant alleges that the alleged invention forming the subject matter of certain claims 14 and 15 of the Gullborg Patent No. 1,307,734 in suit also forms the sole subject matter of certain claims 3, 4 and 5 of Patent No. 1,307,733 granted to said Arthur V. Gullborg on June 24, 1919, and [fol. 34] that, therefore, said claims 14 and 15 of Patent No. 1,307,734 are invalid and of no legal force and effect on the ground of double patenting;

22. As an additional and separate defense in its behalf, defendant alleges:

(a) That the only alleged novel element in claims 14 and 15 of the Gullborg Patent in suit, to wit, the 'grease cup' is recited in said claims 14 and 15 in 'combination with' any grease pump, hose and coupler which may be connected to said grease cup;

(b) That said 'grease cup' also forms the sole subject matter of claims 3, 4 and 5 of the Gullborg Patent No. 1,307,733;

(c) That said 'grease cups' have been and are sold outright by plaintiff as a separate article of manufacture under claims 3, 4 and 5 of the Gullborg Patent No. 1,307,733, and without any restrictions or conditions as to their use;

(d) That said 'grease cups' manufactured and sold outright by plaintiff under it Gullborg Patent No. 1,307,733 have but one purpose, to wit, to receive lubricant under pressure, and that in order to use said grease cups for this purpose it is necessary to connect a grease pump onto said grease cups by some coupling means for co-acting with the bayonet lugs or pins of said grease cups, all as clearly disclosed in the specification and drawings of said Patent No. 1,307,733;

(e) That the purchasers of said 'grease cups' under claims 3, 4 and 5 of Gullborg Patent No. 1,307,733 acquired from the plaintiff a constructive license to use said 'grease cups' in their naturally intended manner, to wit, by connecting a grease pump of some kind onto the 'grease cups' and forcing grease thereinto; and

(f) That, therefore, said claims 14 and 15 if Gullborg Patent No. 1,307,734 are invalid—

(1) because they claim nothing more than the obviously intended use of the 'grease cups' sold by plaintiff under claims 3, 4 and 5 of Patent No. 1,307,733, and

(2) because the subject matter of claims 14 and 15 of the patent in suit involves no intention over or distinct from the invention covered by claims 3, 4 and 5 of Gullborg Patent No. 1,307,733, and

(3) because said claims 14 and 15 thus tend to deprive the outright purchasers of plaintiff's 'grease cups' and constructive licensees under claims 3, 4 and 5 of plaintiff's Gullborg Patent No. 1,307,733, of the obviously intended and sole use for which said 'grease cups' were sold.

[fol. 35] 23. As an additional and separate defense in its behalf, defendant alleges:

(a) That the 'grease cups' under plaintiff's Gullborg Patent No. 1,307,733 have been sold by plaintiff in very large quantities for about the past nine years, first, in the automotive industry and more recently in the industrial fields, under its trade-mark "Alemite";

(b) That the plaintiff has introduced its so-called 'Alemite grease cups' under its Gullborg Patent No. 1,307,733 and has flooded both the automobile and industrial fields with these 'grease cups' largely to the exclusion of other competing grease cups for pressure lubrication;

(c) That the introduction of plaintiff's 'Alemite grease cups' under its Gullborg Patent No. 1,307,733 and its wide distribution in the automotive and industrial fields, to the exclusion of other competitive equipment, resulted primarily from certain market conditions prevalent at the time of its introduction, as well as from a gigantic national advertising program initiated and fostered by the plaintiff on behalf of its said product and also as a result of tremendous sales effort and pressure, and the acquiring by plaintiff of the successfully competing companies;

(d) That said 'Alemite grease cups' under Gullborg Patent No. 1,307,733 have been sold by plaintiff not only outright and without any conditions or limitations whatso-

ever, but have sold to the public at large for about the past nine years without any actual notice to the purchasers or public of any broad monopoly solely of the 'use' of said 'grease cups' as is now apparently contended for by plaintiffs under claims 14 and 15 of the Gullborg Patent No. 1,307,734 in suit.

(e) That said grease cups under Gullborg Patent No. 1,307,733 were not bought by the public from the plaintiff, with any understanding that they could not be used in any way whatsoever except by employing a grease pump, hose and coupler prescribed by plaintiff under claims 14 and 15 of the Gullborg Patent in suit:

(f) That said 'Alemite grease cups' under Gullborg Patent No. 1,307,733, which were bought outright as a separate article of manufacture, by a public unsuspecting of a monopoly solely of the use of the 'grease cups' under claims 14 and 15 of the Gullborg Patent in suit, now constitute a very large majority 'lubricant receptacles' in the automotive and industrial fields;

(g) That since said 'Alemite grease cups' under Gull-
[fol. 36] borg Patent No. 1,307,733 comprise a very large majority of the 'lubricant receptacles' in the automotive and industrial fields, therefore, an exclusive monopoly at this late date, solely of the 'use' of said grease cups under claims 14 and 15 of the Gullborg Patent in suit, or an exclusive monopoly of all lubricant dispensing pumps of any old construction and any description whatsoever, for putting grease into these 'grease cups', would be paramount to and co-extensive with a monopoly of grease consumed through these grease cups and would, in addition, constitute a controlling influence over the many millions of outright purchasers and users of these 'grease cups;'

(h) That such grease monopoly and controlling influence in the automotive and industrial fields

(1) is unjustifiable either in law or in equity by any patent rights upon a mere and relatively trifling mechanical improvement;

(2) is contrary to public interest and policy, and

(3) plaintiff should be estopped at this late date from asserting such broad monopoly under claims 14 and 15."

E. Hayward Fairbanks, Leonard L. Kalish, Bends, Quinn & McKay, Jno. B. Kelber, Counsel for Defendant.

Plaintiff's counsel consents that the foregoing amendment may be entered with the same force and effects as if by leave of Court heretofore obtained.

Lowell W. Taylor, Counsel for Plaintiff.

[fol. 37] IN UNITED STATES DISTRICT COURT

ORDER FOR PRELIMINARY INJUNCTION—Filed March 21, 1927

This cause having come on to be heard upon the plaintiff's motion for a Preliminary Injunction and an Order to Show Cause why the said Preliminary Injunction should not be granted; and upon the Bill of Complaint as amended and the defendant's answer; and upon the affidavits of J. E. Otis, Jr., Ernest W. Davis, Albin C. Ahlberg, D. A. Beezley, O. A. Cumming, on behalf of the plaintiff; and upon the affidavits of Albert H. Hutt, Charles Joseph Hecker, Harold A. Southgate, Leonard A. Kalish, R. M. Hollingshead, R. M. Bagley, Charles Mc C. Chapman and William J. Jackson on behalf of the defendant; and the exhibits identified in and by the said affidavits; and the cause having been argued by Lowell W. Taylor and Lynn A. Williams on behalf of the plaintiff and by R. G. Brown and E. Hayward Fairbanks on behalf of the defendant; and the Court being fully advised in the premises, it is hereby

Ordered, that a Preliminary Injunction issue under the seal of this Court enjoining and restraining the defendants, its officers, agents and employes, pending this suit, from making, using or selling any of the forms or parts of lubricating apparatus referred to in the said affidavits as having been sold by the defendant, and particularly the forms and parts of lubricating apparatus exemplified in the service compressor, together with the Alemite type coupler and the Zerk type adapter identified in the affidavit of D. A. Beezley as Exhibit A, and in the shop compressor, together with metal hose, bayonet coupler and Zerk type adapter

identified in the affidavit of O. A. Cumming as Exhibit A, and as in part illustrated in Exhibit J and Exhibit K of the Davis affidavit, or any other devices not manufactured by plaintiff embodying the invention described and claimed in claims 1, 2, 3, 4, 5, 6, 8, 12, 14 and/or 15 of Gullborg patent No. 1,307,734 and/or embodying the invention described and claimed in claims 2, 3 and/or 5 of the Zerk patent No. 1,475,980, or adapted for use in systems or combinations embodying the same; and from aiding or abetting or contributing in any other way to the infringement of the said Letters Patent or either of them.

H. B. Anderson, United States District Judge.

Approved as to form.

——— ———, Counsel for Plaintiff. Counsel for Defendant.

[fol. 38] IN UNITED STATES DISTRICT COURT

ORDER MODIFYING PRELIMINARY INJUNCTION—Filed April 20, 1927

This cause came on to be heard this 20th day of April, 1927, upon the motion of the defendant to modify the preliminary injunction heretofore granted on the 21st day of March, 1927.

And upon presentation of the motion the court is of opinion that the injunction should be modified by striking out of the order for the injunction and upon the injunction itself Claim 12 of the Gullborg Patent, said Claim having been held to be invalid by the Circuit Court of Appeals for the Sixth Circuit, in the cases pending in that court and decided on the 23rd day of March, 1927, involving the Gullborg Patent.

The motion of the defendant to strike from the order entered herein granting a preliminary injunction on March 21st of the words in the third and fourth lines from the bottom of said order, to-wit: "adapted for use in systems or combinations embodying the same," is taken under advisement and counsel may submit briefs upon the propriety of striking these words from the order and from the injunction.

To all of which the plaintiff excepts.

H. B. Anderson, Judge.

IN UNITED STATES DISTRICT COURT

PETITION OF DEFENDANT FOR LEAVE TO USE NEW DEVICES FOR COUPLERS ON GREASE GUN AND PIN FITTINGS IN LIEU OF COUPLER AND PIN FITTINGS CLAIMED TO INFRINGE ALEMITE FITTINGS AND COUPLER USED BY PLAINTIFF—Filed April 20, 1927.

Now comes the defendant, the R. M. Hollingshead Company, by E. H. Fairbanks, L. L. Kalish, R. G. Brown, and [fol. 39] Abe D. Waldauer, its counsel of record, and shows to the Court a coupler for a grease gun invented, manufactured and used for about two years past by the Chas P. Rogers Company of New York, and asks the judgment of the Court whether use of this coupler by the defendant will constitute an infringement of the Zerk or Gullborg patents, or be considered a violation of the preliminary injunction heretofore granted by this Honorable Court.

Defendant shows that said coupler has a solid and immovable washer, or gasket, and pressure of the washer, or gasket, against the pin fittings is secured by a continuous inner-wedge device, and not by spring pressure. This coupler has been in continuous use for about two years past by the public and a specimen of said coupler is here to the Court shown.

II

The defendant further shows to the Court another form of coupler, called the R. M. Hollingshead coupler, in which there is a solid and immovable washer, not actuated by any kind of spring either internal or external, and, in no way resembles the coupler used by the plaintiff. Union or sealing between the washer and the pin fitting is secured by pressure of the grease and not by any spring either external or internal.

The defendant asks the judgment of the Court whether this form of coupler will be considered to be an infringement of the Zerk or Gullborg Patents, or a violation of the preliminary injunction heretofore granted by this Honorable Court.

A specimen of said coupler is here to the Court shown.

III

The defendant further shows and exhibits to the Court a pin fitting recently patented, which can be used with said types of coupler and prays the judgment of the Court whether such pin fitting constitutes an infringement of the pin fitting used and manufactured by the plaintiff, and whether the use of such pin fitting by the defendant would be a violation of the injunction heretofore granted in this cause.

All of which is respectfully submitted.

E. H. Fairbanks, L. L. Kalish, R. G. Brown, A. D. Waldauer, Attorneys for Defendant.

[fol. 40] In United States District Court

Order of Reference as to the Use by the Defendant of New Devices for Couplers and Pin Fittings—Filed April 20, 1927

Upon the hearing of the motion to modify the preliminary injunction had on the 20th day of April, 1927, the defendant submitted two devices for couplers and one device for a pin fitting, and ask that the court determine whether or not said devices constituted infringement of any of the Claims of the Gullborg or Zerk Patents involved in this proceeding.

In this matter the Court is pleased to refer said petition to A. G. Riley, Standing Master, with instructions to set a time and hear proof in regard to the question as to whether said devices, or similar devices, which may be submitted before him, constitute infringements of any of the Claims of the Gullborg and Zerk Patents.

The Master will hear this proof and report as speedily as possible to the Court his conclusions, both as to matters of fact and in matters of law.

All of which is ordered this 20th day of April, 1927.

To all of which the plaintiff excepts.

H. B. Anderson, Judge.

IN UNITED STATES DISTRICT COURT

SUPPLEMENTAL PETITION OF DEFENDANT FOR LEAVE TO USE NEW DEVICES FOR COUPLERS ON GREASE GUN AND PIN FITTINGS IN LIEU OF COUPLER AND PIN FITTINGS CLAIMED TO INFRINGE ALEMITE FITTINGS AND COUPLER USED BY PLAINTIFF—Filed May 2, 1927

Now comes the defendant, the R. M. Hollingshead Company, by E. H. Fairbanks, L. L. Kalish, R. G. Brown and Abe D. Waldauer, its counsel of record, and shows the Court [fol. 41] a coupler for a grease gun, marked "Defendant's Exhibit D" and asks the judgment of the Court whether use of this coupler by defendant will constitute an infringement of the Zerk or Gullborg patents, or be considered a violation of the preliminary injunction heretofore granted by this Honorable Court.

I. Defendant shows that said coupler has a solid and immovable washer, or gasket, and pressure of the washer or gasket, against the pin fittings is secured by a continuous screw device, and not by spring pressure.

II. Defendant further shows and exhibits to the Court a pin fitting marked "Defendant's Exhibit E" and prays the judgment of the Court whether such pin fitting constitutes an infringement of the pin fitting used and manufactured by the plaintiff, and whether the use of such pin fitting by the defendant would be a violation of the injunction heretofore granted in this cause.

All of which is respectfully submitted.

E. Hayward Fairbanks, L. L. Kalish, R. G. Brown, A. D. Waldauer, Attorneys for Defendant.

IN UNITED STATES DISTRICT COURT

WRIT OF INJUNCTION—Filed March 24, 1927

UNITED STATES OF AMERICA,
Western District of Tennessee, ss:

The President of the United States of America, to the R. M. Hollingshead Company, Greeting:

Whereas, the Bassick Manufacturing Company, a citizen of Delaware, has filed on the Equity side of the District

Court of the United States for the Western District of [fol. 42] Tennessee, a bill against the R. M. Hollingshead Company, and has obtained an allowance for an injunction as prayed for in said bill;

Now, therefore, we having regard to the matters in said bill contained, do hereby command and strictly enjoin you, the said R. M. Hollingshead Company from making, using or selling any of the forms or parts of lubricating apparatus referred to in the said affidavits as having been sold by the defendant, and parficularly the forms and parts of lubricating apparatus exemplified in the service compressor, together with the Alemite type coupler and the Zerk type adapter identified in the affidavit of D. A. Beezley as Exhibit A, and in the shop compressor, together with metal hose, bayonet coupler and Zerk type adapter identified in the affidavit of O. A. Cumming as Exhibit A, and as in part illustrated in Exhibit J and Exhibit K of the Davis affidavit, or any other devices not manufactured by plaintiff embodying the invention described and claimed in claims 1, 2, 3, 4, 5, 6, 8, 12, 14 and/or 15 of Gullborg patent No. 1,307,734 and/or embodying the invention described and claimed in claims 2, 3, and/or 5 of Zerk patent No. 1,475,890, or adapted for use in systems or combinations embodying the same; and from aiding or abetting or contributing in any other way to the infringement of the said Letters Patent or either of them.

Which commands and injunctions you are hereby respectively required to observe and obey until our said District Court shall make further order in the premises.

Wherein fail not under penalty of the law thence ensuing. A copy of said order is hereto attached.

Witness the Honorable Harry B. Anderson, Judge of the District Court of the United States, this the 21st day of March, A. D. 1927, and of the American Independence the 151st year.

A. G. Mathews, Clerk, by W. L. McKinney, C. D. C.
(Seal.)

(Reverse side)

3-22-27.—This writ came to hand at Memphis, Tennessee & I executed same on the within named Defendants, R. M. Hollingshead Co., as herein commanded by reading to &

leaving a copy of same. C. A. Pohle, being credit manager [fol. 43] accepted service for R. M. Hollingshead.

This 22nd day of March, 1927.

Arthur Rogus, U. Marshal. C. E. Fawwater, Deputy.

Street car fare endeavoring to serve	14¢
Serving	14
	28¢

[File endorsement omitted.]

IN UNITED STATES DISTRICT COURT

TESTIMONY TAKEN BEFORE HON. A. G. RILEY, MASTER, IN ACCORDANCE WITH THE ORDER OF APRIL 20, 1927; CONDENSED PURSUANT TO EQUITY RULE 75—Filed Dec. 31, 1928

May 3, 1927.

HUGO C. GIBSON, witness called on behalf of defendant, testified as follows:

His name is Hugo C. Gibson, fifty-three years old; oc- [fol. 44] cupation, consulting engineer; resident of Philadelphia, Pennsylvania. His qualifications as a mechanical expert were accepted by plaintiff.

A bayonet type coupler (product of the C. P. Rogers Company, Jersey City, N. J.) was offered and introduced in evidence as defendant's Exhibit A.

A sectional duplicate of Exhibit A was offered and introduced in evidence as defendant's exhibit A-1.

Offered in evidence as defendant's Exhibit C, pin fitting.

Describing defendant's Exhibit A coupler, we have a structure which consists of a main body having external screw threads and a cap or end piece cooperating with the screw thread so that the whole may be assembled. In that cap there is a hole and slot which accommodates and permits co-action with a fitting for lubrication. In operation, the coupler is placed upon the fitting and turned around the fitting. The two lugs of the fitting engage with an internal stepped screw thread within the slotted cap or end piece of the coupler. The surface serrations of the screws

prevent easy unscrewing or backing-off of the coupler from the fitting. As the coupler is screwed onto the fitting a washer or gasket within the coupler is pressed against the end of the fitting, thereby making a tight joint between the end of the fitting and the body of the coupler so that fluid passing through the coupler and fitting, under pressure, will not leak from the joint made by the gasket. While the interrupted or stepped screw threads in the coupler will maintain a pressure-proof connection between coupler and fitting, yet the coupler can be disconnected from the fitting by simply turning it in the reverse direction by hand.

The gasket or washer in the coupler of defendant's Exhibit A is a plain flat washer incapable of any sliding or reciprocating movement within the coupler. It is merely adapted to be pressed or squeezed against the fitting by the co-action of the stepped screws of the coupler with the lugs of the pin fitting.

There is no spring in the coupler of defendant's Exhibit A, nor is there any other resilient means for acting upon the plain flat leather gasket or washer within the coupler.

Referring to Claim 1 of Gullborg patent No. 1,307,734 involved in this suit, and to the coupler of defendant's Exhibits A and A-1, and the fitting of defendant's Ex-
[fol. 45] hibit C; I will say that the element called for in the last part of the claim, namely "a perforated sealing disk slidably mounted in the enlarged portion of said bore, and a spring confined between the ends of said conduit and said disk for urging said disk against said first named coupling member" is not present in the coupler of defendant's exhibit.

Referring to the same exhibits and to Claim 2 of the Gullborg patent, I will say that there is no "perforated sealing disk mounted to reciprocate in the bore of said coupling member, means for yieldingly urging said sealing disk against the closed end of said first named coupling member" as called for in that claim.

Referring to the same exhibits and to Claim 3 of the Gullborg patent in suit, I will say that the "perforated sealing disk mounted to reciprocate in the bore of said coupling member, means for yieldingly urging said sealing disk against the closed end of said first named coupling member, and means for limiting the movement of said sealing disk toward said second coupling member" as called for in Claim 3 is not present in the defendant's exhibit.

There is no reciprocating sealing disk in the coupler of defendant's Exhibit A and there is nothing to urge any sealing disk against the coupling member in that device as called for in claim 4 of the Gullborg patent.

Referring to Claim 5 of the Gullborg patent in suit, and particularly the cause "the bore of said coupling member being enlarged to provide a shoulder, a perforated sealing disk slidably mounted in the enlarged portion of said more, and a spring confined between the ends of said conduit and said disk for urging said disk toward said shoulder"; I will say that in the defendant's Exhibit A Coupler there is no such shoulder, disk or spring as called for in Claim 5.

Referring to Claim 6 of the Gullborg patent in suit, and to the language reading "a perforated sealing disk slidably mounted in the bore of said coupling member, and means for yieldingly urging said sealing disk toward the outer end of said coupling member, and means for limiting the movement of said sealing disk toward the outer end;" I will say that there are no such elements in the coupler of defendant's Exhibit A.

Referring to defendant's coupler Exhibits A and A-1, and to Claim 8 of the Gullborg patent in suit reading:

"The combination with an apparatus having a part to be lubricated, of a conduit for conducting lubricant to said [fol. 46] part, a coupling member secured to the end of said conduit and provided with a spring-pressed valve closure, means for supplying lubricant to said conduit comprising a receptable provided with a discharge outlet, a second coupling member connected with said discharge outlet, means for detachably uniting said coupling members, and means for sealing the joint between said coupling member and for removing excess lubricant from the adjacent ends thereof when said coupling members are uncoupled."

I will say that there is no means for removing grease from either of the coupling members. There is no such thing.

A sectional duplicate of defendant's Exhibit C was offered and introduced in evidence as defendant's Exhibit C-1.

The defendant's coupler of Exhibit A was applied to the defendant's fitting or grease cup Exhibit C.

Referring to defendant's Exhibits A, A-1, C and C-1 and to claim fourteen of the Gullborg patent in suit, I will say that I do not find "a grease cup comprising a tubular member having one end flanged inwardly to provide a closure seat, a closure, a pin extending through said tubular member and from both sides thereof, and a spring confined between said pin and closure, and tending to hold said closure on its seat." The type of valve in the fitting marked Exhibit- C and C-1 is a ball. I find a spring in this device at the end opposite to where the ball is found. The spring is not confined between the ball valve and the pin or the closure. There is no spring between the valve closure and the pin in that fitting.

Now referring to the same Exhibits A, A-1, C and C-1 and referring to Claim 15 of the Gullborg patent in suit I will say that there is no spring confined between the pin and the closure.

An Alemite pin fitting or grease cup of plaintiff's manufacture, recited in Claims 14 and 15 of the Gullborg Patent 1307734, was offered and introduced in evidence as defendant's Exhibit D.

A sectional duplicate of Exhibit D was offered and introduced in evidence as defendant's Exhibit D-1.

An Alemite coupler of plaintiff's manufacture made ac-
[fol. 47] cording to the Gullborg Patent in suit was offered and introduced in evidence as defendant's Exhibit E.

A sectional duplicate of Exhibit E was offered and introduced in evidence as defendant's Exhibit E-1.

The Alemite coupler of defendant's Exhibit- E and E-1 contains the spring-pressed and slidably mounted sealing member or washer, as defined in Claims 1, 2, 3, 4, 5, 6 and 8 of the Gullborg Patent 1307734.

Another defendant's coupler was offered and introduced in evidence as defendant's Exhibit B.

A sectional duplicate of Exhibit B was offered and introduced in evidence as defendant's Exhibit B-1.

The defendant's coupler of defendant's Exhibit- B and B-1 is provided with bayonet slot means for engaging the fitting and a sealing washer for the purpose of sealing against leakage of liquids passing through under pressure. There is a screw thread provided in the outer mem-

ber for the purpose of advancing the outer member by hand through the operation of that screw thread, and so, in turn, advancing the inner member with this sealing washer against the face of the fitting. Similarly, by reversing the operation, unscrewing the outer member, the seal is released and the coupling may be removed from the fitting. The sealing member of this coupler is a plain annular washer, apparently of leather, incapable of any sliding or reciprocating motion within the coupler, but fixed therein. There is no means for yieldably urging the sealing disc or leather washer in the coupling device of defendant's Exhibit B.

Defendant's coupler, of defendant's Exhibits B and B-1, does not contain a sealing disc or spring as called for in Claim 1 of the Gullborg Patent. Referring to Claim 2 of the Gullborg Patent, I find that the coupler of defendant's Exhibit B does not contain a perforated sealing disc mounted to reciprocate in the bore of the coupling member or means for yieldably urging the sealing disc against the closure end of the first named coupling member. Defendant's coupler (Exhibit B) does not have a perforated sealing disc mounted to reciprocate in the bore of the coupling member or means for yieldingly urging sealing disc against the first named coupling member, as called for in Claim 3 of the Gullborg Patent. The coupler (defendant's Exhibit [fol. 48] B) does not have a perforated sealing disc mounted to reciprocate in the bore of the coupling member or means for yieldingly urging the sealing disc against the end of the first named coupler nor as called for in Claim 4 of the Gullborg Patent.

Defendant's coupler, Exhibit B, does not have a perforated sealing disc, slidably mounted, in the enlarged portion of the bore or a spring confined between the ends of the conduit and disc for urging the disc toward a shoulder, as called for in Claim 5 of the Gullborg Patent.

Defendant's coupler, Exhibit B, does not contain a perforated sealing disc slidably mounted in the bore of the coupling member or means for yieldably urging the sealing disc towards the outer end of the coupling member or means for limiting the movement of the sealing disc towards the outer end as called for in Claim 6 of the Gullborg Patent. There is no means for removing excess grease from either of the coupling members of Defendant's Ex-

hibits B and C as called for in Claim 8 of the Gullborg Patent.

Referring now to defendant's Exhibits E and E-1, there is a sealing disc or cup leather capable of sliding within the enlarged part of the coupling and restricted within that enlarged part, and a spring as called for in Claims 1, 2, 3, 4, 5, 6 and 8 of the Gullborg Patent in suit.

Offered in evidence as defendant's Exhibit F, another form of defendant's coupler.

Offered in evidence as defendant's Exhibit G, another form of pin fitting.

Duplicate sectional models of defendant's Exhibits F and G were offered and introduced in evidence as defendant's Exhibits F-1 and G-1, respectively.

Referring to defendant's Exhibits F and F-1, and to Claims 1, 2, 3, 4, 5, 6 and 8 of the Gullborg Patent in suit, I find that there is no perforated disc slidably mounted, nor is there any means for removing excess lubricant from the adjacent ends of the coupling members when uncoupled, as variously recited in these claims.

The coupler of defendant's Exhibits F and F-1 consist of two main parts, one having an orifice and a bayonet slot for engagement with a fitting. The other part is mounted with a screw within the first part and contains a common leather washer which may be pushed up against the end of the fitting, as the coupling has been engaged upon the fitting. By the use of the screw thread a seal is effected [fol. 49] by the leather washer, between the coupler and the fitting. For removing the coupler, it is unscrewed and then removed from the fitting.

In the fitting of defendant's Exhibits G and G-1 there is no valve closure and there is no spring whatever as called for by Claims 14 and 15 of the Gullborg Patent in suit.

Upon cross-examination Mr. Hugo C. Gibson testified as follows:

I will say that the combination of an Alemite fitting of the Bassick Manufacturing Company, Exhibit D, and the compressor and coupler, Exhibit A of the Cumming affidavit is not described in Claims 1, 2, 3, 4, 5, 6, 8, 14 and/or 15 of the Gullborg Patent in suit. The reason for this conclusion is that if I were to try to make a device called for by Claims 14 and 15, I would not know very well what to

do. In order to do what this inventor wanted to do, I would have to turn to the drawings to find out how to do it, and I should turn to Figure 5 and do what is disclosed in Figure 5. I would find the arrangement of Figure 5 in the assemblage of apparatus before me.

I do not find in Claims 14 and 15 of the Gullborg Patent in suit any words or phrases which are not met by these devices before me. In my opinion, Claims 14 and 15 are not descriptive of the combination of Exhibit A of the Cumming affidavit and Exhibit D offered herein. I do not find any word or words in Claim- 14 and 15 of the Gullborg Patent in suit which are not descriptive of the combination of the pump and hose of Exhibit A of the Cumming affidavit; the defendant's coupler "A" submitted herein and the plaintiff's Gullborg Alemite pin fitting submitted herein as Exhibit D.

A drawing representing the defendant's Exhibits A and A-1 was offered and introduced in evidence as plaintiff's Exhibit A-2.

I do not find any word or words in Claims 14 and 15 of the Gullborg Patent in suit which are not aptly descriptive of the assemblage of apparatus of the pump and hose of Exhibit A of the Cumming affidavit; defendant's coupler of defendant's Exhibits B and B-1 herein, and plaintiff's Gullborg Alemite pin fitting, defendant's Exhibit D herein.

I find no word or words in Claims 14 and 15 of the Gullborg Patent in suit which are not descriptive of the assemblage of apparatus composed of the pump and hose [fol. 50] of Exhibit A of the Cumming affidavit; the defendant's coupler and defendant's Exhibits F and F-1 herein and the plaintiff's Gullborg Alemite pin fitting or grease cup, defendant's Exhibit D herein.

A drawing representing the defendant's coupler of defendant's Exhibits B and B-1 was offered and introduced in evidence as plaintiff's Exhibit F-2,

A device exemplifying the spring shackles and bolts of an automobile, to whose bearing a pin fitting such as Exhibit D was applied, was offered and introduced in evidence as plaintiff's Exhibit No. 1.

Offered in evidence as plaintiff's Exhibit 2 page eight of the 1927 catalog of the Larkin Automobile Parts Company of Dayton, Ohio.

The language of the order for the preliminary injunction in this suit is in part that the defendant be restrained from making use or selling certain devices, including the lubricating apparatus exemplified and identified in the affidavit of Cumming as Exhibit A, or any other device not manufactured by the plaintiff embodying the invention described and claimed in Claims 14 and 15 of the Gullborg Patent 1,307,734 or adapted to be used in systems or combinations embodying the same. It is my opinion that the couplers, defendant's Exhibits A, B, and F, if applied to the end of a flexible conduit or compressor such as Exhibit A of the Cumming affidavit, can be satisfactorily used in conjunction with the pin fitting exemplified by defendant's Exhibit D herein for the lubrication of a bearing.

It is my opinion that the couplers, defendant's Exhibits A, B, and F, would also be adapted for use in combination with the fitting of defendant's Exhibit C. When I refer to the Alemite lubricating outfit, I have in mind the equipment of the Bassick Manufacturing Company, the plaintiff herein.

I first became familiar with the pin fitting of Exhibit C within the past week.

Upon Redirect Examination Mr. Gibson testified as follows:

If I endeavored to learn the nature of the apparatus or combination described in Claims 14 or 15 of the Gullborg Patent in suit, I would first consider all the elements of this lubricating combination, as disclosed in the wording of the claim, and I would find no difficulty in constructing, either mentally or materially, "a grease cup comprising a tubular member, having one end flanged inwardly to pro- [fol. 51] vide a closure seat, and a closure, and a pin, extending through the tubular member and from both sides thereof, and a spring confined between said pin and closure." I could follow the instructions for disclosure of that claim very readily, either mentally or in materials and could construct a—a fitting, as described there, the description being clear enough to permit that. Then I could take or make a grease pump, or think of a grease pump, having a discharge conduit, yes, and I could mentally or materially make up all of the parts so far referred to, so that they would operate satisfactorily or be capable

or doing so. But here I come to an expression which says: "means co-acting with the ends of said pin for detachably connecting the discharge end of said conduit with said grease cup," and I would me at sea, for I would not know what to do. I could make up a lot of means, which would co-act with the ends of said pin, but I would not have a clear instruction as to how to make that up so that it would act properly as a lubricating means, which I would understand to mean—to be a means for pressing lubricant into the grease cup, that being what a grease cup is for, and if I hadn't any further instructions, I should certainly have to, or should certainly be liable to make a very inefficient, and improper and leaking device, which may not have the effect of getting the grease into the grease cup, against the pressure of the closure spring. Therefore, I should naturally have to turn to the drawings and see what the invention had disclosed there, in order to guide me and I should find there a very clear detail of the arrangement that the inventor had in mind, which would provide a means for co-acting with the end of said pin, etc. I should find that in figures two and five of the drawing, and if I followed those instructions or disclosures there, I could make an arrangement which would satisfactorily perform the lubrication desired. That is what I would do.

Stating some of the necessary and essential qualities or characteristics of the means co-acting with the ends of the pin of a pin fitting for detachably connecting the discharge end of the conduit with the grease cup, I may state that the object of a device is to lubricate—is to force lubricant into a bearing, it has always been essential that the joints of the device must be substantially grease tight; the tighter they are, the better the article for its purpose. And I would find that it was quite easy to have the grease cup tight against leakage of lubrication. The grease pump and the discharge conduit also could readily be tight, [fol. 52] using customary means, but where you come to the co-acting of the compressor device as a whole with the fitting or grease cup, you have a joint there which has—which would have to be made and unmade many times, and which would not require, in a matter of this kind—the lubrication of automobiles properly—and which would not require the services of a mechanic for the purpose of making a grease tight joint, so it would be essential

in this combination of parts to provide some means which would automatically, readily and without difficulty or even, I might say, conscious act on the part of the user, other than that to—of actually connecting the two parts together, the compressor outfit and the fitting—to have a part—to have an arrangement in there which would automatically make a tight seal. Not finding any indication or instruction as to how that should be done, why I would—as I said before, turn to the drawings and I would there be told, and in my own judgment I would see that the arrangement of the drawings would make such a tight seal, and I would find that that seal was accomplished by the use of a cup leather, with a perforation in it for the passage or grease evidently, and that cup leather is mounted in a recess or space which restricts its movement, so that once put in there, it would not easily fall out, and that cup leather has a spring arranged to press against the face of the flat portion of the cup leather, and the other end of that spring abuts against a fixed part of the coupling, so that the spring may exert its pressure upon the cup leather and normally to maintain its position toward the bayonet joint end of the coupling. The cup leather is so arranged then that when the coupling is engaged with the grease cup in the way shown here, that is by means of the bayonet slots in the coupling and the pins in the grease cup, the grease cup would have automatically moved the cup leather up and so compressed the spring, through its contact with the end of the grease cup. This cup leather would have made a spring-pressed, grease tight joint, between the coupling and the grease cup.

Now, on removing that coupling from the grease cup, the cup leather would return to its original position against a shoulder there in the coupler.

If I were to visualize or give a picture of the construction meant by "means co-acting with ends of the said pin for detachably connecting the discharge end of said conduit with a grease cup," recited in Claims 14 and 15, it would be the construction of Figure 2 and also part of [fol. 53] Figure 5 of the drawing of the Gullborg Patent in suit.

The characteristic structural features of the means disclosed in Figures 2 and 5 and described in the specification of the patent in suit, for co-acting with the ends of said pin, are the perforated cup leather and a spring pressing that

cup leather; assembled inside of an enlarged cylinderical bore of the main body of the coupler.

Upon Redirect Examination Mr. Gibson testified as follows:

In stating heretofore that there were no words in claims 14 and 15 which were not descriptive of each of the three different combinations of a pump, a flexible hose and a grease cup or fitting, of plaintiff's manufacture (defendant's Exhibit D) with one of the three new couplers, Exhibits A, B and F alternatively, I meant that the words of the claims in their abstract sense indicated an outfit somewhat on the lines of the assembly that I was asked about. I did not mean that in the practical sense of the words, that claims fourteen and fifteen were met by that combination.

Neither claim fourteen nor fifteen is readable upon those combinations, for the reason that none of those coupler exhibits have any such arrangement in their structure as is indicated in the drawings of the Gullborg patent in suit.

If I construed those words of claims fourteen and fifteen, which call for "means co-acting with the ends of said pin for detachably connecting the discharge end of said conduit", the only possible way I can construe them, by an examination of the disclosure of the same patent, then the three exhibitions placed before me of the pump, and the flexible hose, having at its free end, one of the three new coupler devices submitted by defendant (exhibits A, B and F,) would not come within the meaning of any one of these two claims and they wouldn't infringe them.

The screw thread of the defendant's coupler, or Exhibit B, was such that it would not connect or thread together with the screw thread on the end of the flexible hose or the pump and hose of Exhibit A of the Cumming affidavit. Defendant's coupler of Exhibit B and the pump and hose of Exhibit A Cumming affidavit could be connected together, however, by the interposition of a connector bushing having appropriate threads at each end to receive the coupler B and end of the hose respectively.

In my opinion the claims 14 and 15 of the Gullborg patent in suit, when construed in the light of the specification [fol. 54] and drawings of the patent, do not read upon the compressor, including the coupler of Exhibit A, Cumming

affidavit, in conjunction with the Alemite pin fitting, defendant's Exhibit D.

JOHN M. MCGREGOR, Plaintiff's witness:

My age is 37; I live at Memphis, Tennessee and am the distributor of Alemite products made by the Bassick Manufacturing Company. My territory comprises parts of five states, Kentucky, Missouri, Arkansas, Mississippi and Tennessee. I have met the competition of the R. M. Hollingshead Company, the defendant herein. The book handed to me shows various lines of equipment and fittings that we purchase from the Bassick Manufacturing Company and sell throughout the territory I have mentioned. The book has been identified as Exhibit H of the Otis affidavit herein. The books shows an Alemite service compressor, Model H-15 and a small horizontal service compressor, Model H-5a. It also shows a giant push gun, Model 1000 and an Alemite portable pneumatic service compressor, another pneumatic compressor and an Alemite handy shop gun.

The pneumatic compressor marked "High Pressure Chassis Lubricator, the R. M. Hollingshead Company, Camden, New Jersey, U. S. A.", which was purchased by Mr. Cumming and marked Exhibit A is practically the same as our Alemite Handy Shop Compressor shown in the Alemite price list. It is intended for the same purposes and uses.

This larger Hollingshead equipment, equipment purchased by Mr. Beezley, is being sold in competition with our Alemite H-15 compressor. It has a connection that is suitable for fitting on our Alemite fittings. The Bassick Alemite fitting and coupling comparable with the two Hollingshead devices in evidence are sold to practically every automobile and service station of every size. Various mills, bottling companies, concrete mixers, dredging machines and others have our system of lubrication. The service compressors are not ordinarily sold to people who have only one automobile to grease. The two types of equipment in question are sold ordinarily to service stations or car dealers, who have a lot of cars to Alemite. The cars to be greased are equipped at the factory with Alemite pin fit-

ting, the product of the Bassick Manufacturing Company. The Alemite system is installed on every automobile sold [fol. 55] in this territory with the exception of the Ford, Hudson and Essex. These cars do not have any high pressure system of lubrication installed upon them. Grease-cups are provided on the Ford and oil cups on the Hudson—I mean old-fashioned grease cups and oil cups. None of the devices here involved can be used with the lubricating equipment on Ford, Hudson or Essex cars. All other cars equipped with lubricating fittings can be serviced with the Hollingshead service compressors in competition with the service compressors of the Bassick Manufacturing Company which I sell. All of the Alemite fittings which we sell are provided with a ball and spring. The devices in evidence as defendant's Exhibits G and G-1 are not provided with any valves whatever for closing the openings there through. In my opinion such articles are not commercially useful, or feasible to be used in lubrication in conjunction with high pressure compressors for the reason that there is no ball to prevent the lubricant, first, from coming back, or the dirt and grit from getting into your bearings.

Cross-examination:

Ford cars are equipped with grease cups and have been for twenty years. Hudson and Essex cars are equipped with oil cups. There is no provision made on a Ford car to screw in an Alemite pin fitting in the shackles. There are six bearings on a Ford car which are equipped with grease cups. There is an oil hole provided at each shackle on a Ford car in which a little device for the purpose of placing oil on top of the bearing. There is a cover to keep the dirt out and it must be opened to put the oil in and is closed automatically. The little reservoir to hold the oil is raised above the bearing one-eighth or one-fourth of an inch and has a little closure on it.

On Hudson and Essex cars, with which I am also familiar, there are oil cups provided for the purpose of retaining a certain amount of oil that is gradually fed into the bearing. At least that is the theory of it. Most of the Hudsons here are equipped with the Alemite system. I have lubricated the spring shackles of Hudson and Essex cars but we only lubricate them with Alemite, we don't use the oil cups. If an owner of a Hudson or Essex car with oil cups wanted

his car lubricated we would do so by inserting oil in the cup. We would not have to remove any part of the cup. The oil is supplied by an oil can being placed in the oil cup. I have no actual knowledge as to the percentage of [fol. 56] Hudson and Essex cars equipped with Alemite lubricating equipment but we sell a great many systems for Hudson and Essex cars. This equipment is sold to the Hudson and Essex dealer at Memphis, which is the largest one we have in our territory. They buy ten or fifteen sets of Alemite for either Hudson or Essex cars at the time. By a "set of Alemit-" I mean 31 pin fittings. In some cases the dealer buys them in bulk and in some cases they are put up in sets in cotton bags, so many fittings for each car. Before applying the fittings which are purchased from us in bulk or in sets the oil cups are first removed. The Hudson-Essex agency has as part of their shop equipment two of our complete lubricator equipments, type H-15, which includes a grease tank holding fifteen pounds of grease, which is enough for a good many cars. To the grease in the tank, pressure is applied by a proper operating lever on top. The grease goes through a flexible hose into the coupling member. I would say that the lubricating units comprise a tank or reservoir for holding a supply of grease, pump, flexible hose and coupling on the end of the hose. In some instances the Hudson-Essex agency purchased fittings and equipment complete and in other instances they bought only the fittings. Although I stated that outside of Ford, Hudson and Essex cars all other cars are equipped with Alemite, there may be a few other cars that do not represent any appreciable amount of the total number of cars that are not so equipped, but practically every other car that is sold here in any large number is equipped with Alemite system of lubrication.

I would not say that the Alemite Zerk system is in every way similar to the Alemite bayonet coupling system. The only thing in common is that it accomplishes the same thing only in a different way. I know of other cars equipped with the Zerk system:—Buick, Dodge, Chrysler, Reo.

I always refer to "Alemite" as being either the Alemite or the Alemite-Zerk type, and qualify my statements to the extent that I was referring to both systems in general. As a matter of fact Ford cars, Hudson cars, Essex cars, Chrysler cars, Buick cars, Dodge cars and Reo cars are not

equipped with the lubricating system of the Gullborg patent.

I stated that the grease cup or fitting of defendant's Exhibit- G and G-1 would not be practical for the reason that there is no provision made for holding the lubricant in the bearing and because there is no provision to exclude [fol. 57] dust and dirt and grit that naturally accumulate and work into the bearing.

The ball check valve in the Zerk fitting is approximately half way down the fitting and there is a small passage way leading to the check valve from the mouth of the fitting.

We find, by having the ball check valve approximately half way down the fitting which opens when the compressor is attached to it, that it automatically closes upon the removal of the compressor and the lubricant is not forced out. There is a small volume of lubricant left over the hole that keeps the dirt and grit from entering the fitting proper.

We recommend Alemite lubricant for use with the Zerk system, but various kinds of lubricants are used. I would refer to the lubricant as a light grease which will not flow. The Zerk fitting is filled with the lubricant to the very mouth of the opening which is sealed with a film of lubricant. The only possible entrance of grit would be that small amount which collects on the outer surface of that remaining lubricant.

The opening in defendant's Exhibit G is approximately the same size as the mouth of the Zerk fitting.

There are a good many industrial machines which are not originally equipped at the factory with the Alemite system but merely with old-fashioned grease cups and I have sold to a good many the Alemite system. These old fashioned grease cups are threaded into the machines by either a one-eighth or one-quarter inch screw thread. The bearings are provided with internally threaded openings with a standard one-eighth or a standard one-quarter inch pipe thread. The majority of these bearings are threaded with a one-eighth inch thread. The majority of the Alemite fittings are threaded with a one-eighth inch standard pipe thread.

The garage men or service men, to whom we sell our lubricators including the tank, pump, hose and coupling for lubricating cars equipped with our fittings, lubricate many different cars day in and day out. He may lubricate

with it a car from California, another one from Memphis and a third one from New York or from wherever it happens to come, and he may never lubricate the same car again.

I would say where the system is applied to stationary machinery, such as baking machinery or the like, the compressor stays there. The stationary machinery and the lubricating equipment would remain in one place all the time.

[fol. 58] Redirect examination:

I point out in connection with the Zerk type fitting shown on page 11 of Exhibit H price list that there is a spring actuated ball check valve somewhere nearly half way between the end of the ingress end and egress end of the fitting and that the ball check valve closes as soon as the lubricant has been forced into the bearing. In the Zerk type fitting the spring between the ball check valve and the ingress end of the fitting is left filled with the grease and the grease continues to fill that space because the check valve holds the grease in in that place and the dirt cannot get in. The fitting marked defendant's Exhibit G contains no valve of any kind. By vibration or otherwise the grease would work out of the fitting so that there would — a space within the fitting into which grit and dust might work. In that respect it is different from the Zerk fitting.

Recross-examination:

The ball in the Alemite Zerk fitting prevents the grease from coming out beyond the ball check valve.

The grease cup of defendant's Exhibits C and C-1, containing a ball check valve, would prevent the grease from coming out and the dirt entering the fitting if the ball were to become closed immediately upon removing the gun, like the present fittings we use.

I imagine that the ball of the defendant's fitting Exhibits C and C-1 would in fact set when the pressure was removed.

I imagine that the ball check valve in the defendant's fitting (Exhibits C and C-1) would come back like the ball in our Alemite fittings and would prevent the grease from coming out and prevent the dirt and dust from getting in.

We have sold our fittings for replacing broken fittings. We haven't any way of determining to what use our fit-

tings are going to be put, but we do know a certain proportion are broken off and a certain proportion of them are lost.

Offered in evidence as plaintiff's Exhibits 3-A, 3-B, 3-C, and 3-D, Volumes 1, 2, 3 and 4 respectively, of the printed record before the Court of Appeals for the Sixth Circuit in Bassick Manufacturing Company vs. Larkin Automotive Parts Company.

Offered in evidence as plaintiff's Exhibits 4-A and 4-B, volumes 1 and 2 of the printed record before the United [fol. 59] States Circuit Court of Appeals for the Sixth Circuit in the case of Bassick vs. O. K. Manufacturing Company, et al.

Offered in evidence as plaintiff's Exhibit 5 a printed copy of the record in the United States Circuit Court of Appeals for the Sixth Circuit in the case of Lyman vs. Bassick and Peerless v. Bassick.

Offered in evidence as plaintiff's Exhibits 6 and 6-A, volumes 1 and 2 of the printed record before the United States Circuit Court of Appeals for the Seventh Circuit in the case of Larkin v. Bassick.

Offered in evidence as plaintiff's Exhibit 7 a copy of the Larkin Co. 1926 catalog constituting Exhibit No. 154 in the matter of Bassick Manufacturing Company v. Larkin, Appeal Number 3823 in the United States Circuit Court of Appeals for the Seventh Circuit.

Offered in evidence as plaintiff's Exhibit 8 a copy of the opinion of the Sixth Circuit Court of Appeals in Bassick v. Lyman, et al.

Offered in evidence as plaintiff's Exhibit 9 the opinion of the Circuit Court of Appeals for the 7th Circuit in Larkin vs. Bassick.

Offered in evidence as plaintiff's Exhibit 10, volumes 1 and 2 of Bassick Company's adjudication books containing the opinions and decrees in suits involving patents covering Alemite lubricating equipment.

Offered in evidence as plaintiff's Exhibit 11 brief of R. M. Hollingshead as amicus curiæ in the matter of Bassick v. O. K. et al, pending in the Court of Appeals for the Sixth Circuit.

Offered in evidence as plaintiff's Exhibit 12 brief in answer to the brief of R. M. Hollingshead as amicus curiæ in Bassick v. O. K. et al.

Offered in evidence as plaintiff's Exhibit 13 copy of brief on behalf of plaintiff appellee as to validity of the patents in suit in the matter of Larkin v. Bassick, in the United States Circuit Court of Appeals for the 11th Circuit, Appeal number 3833.

[fol. 60] IN UNITED STATES DISTRICT COURT

REPORT OF STANDING MASTER ON ORDER OF REFERENCE OF APRIL 20, 1927—Filed Oct. 15, 1927

To the Honorable Harry B. Anderson, Judge, etc.:

Pursuant to the order of reference made and entered in this cause on the 20th day of April, 1927, at a stated term of this Court, held in the City of Memphis in said District, whereby I was directed to report in regard to the question whether or not certain devices or similar devices constitute infringements of any of the claims of the Gullborg and Zerk Patents, both as to matters of fact and in matters of law. In accordance with petition of the defendant, filed on April 20, 1927, and Supplemental Petition filed on May 2, 1927, I A. G. Riley, Standing Master, do respectfully report that I have proceeded to investigate the matter so referred to me; that I set apart a suitable time to hear the matters in controversy and that I have been attended by the parties and their respective counsel of record.

I

Plaintiff, at the beginning of the hearing, offered several objections to the proof before the Master. While I am of the opinion that I have no jurisdiction to pass upon the objections, I will rule on them because presented and argued, and in order that the parties may take advantage of the same if deemed appropriate.

(1) The first objection is that under the equity rules the parties are entitled to a hearing by the Court, rather than before a Master, citing the recent case of Los Angeles Brush Manufacturing Company vs. James. The Court, doubtless is, and the Master is, familiar with that decision. It is no part of the power of the Master to consider the validity of an order of reference, and the Court, in spite

of that decision, entered an order of reference, and, therefore, sufficient and compelling reasons must have existed. A motion to revoke the order of reference would be quite the correct method to raise this question. The objection is overruled by me as being without the limits of my authority and jurisdiction.

(2) The second objection is that the defendant had been granted and allowed an appeal from the order awarding the preliminary injunction, and that neither the Court nor the Master has jurisdiction to consider the matters referred.

A motion to revoke the order of reference would aptly [fol. 61] test the question. The record on the hearing, however, does not disclose the perfection of the appeal. It is the filing of the bond and perfection of the appeal that ousts the jurisdiction of the District Judge and transfers it to the appellate court, and at the hearing this had not been done.

Then, again, it is doubtful whether an appeal from an order awarding a preliminary injunction would prevent the consideration of the questions presented by the petitions referred to the Master, as they present matters wholly new, collateral and extraneous to the record, and do not seek to modify, attack or reverse the decision of the court on the preliminary injunction, but recognize its validity and binding effect, and would seem, under the decisions of this court, proper to be considered after an order of either a preliminary or permanent injunction. However, the Master has no power other than to overrule the objection, and it is accordingly done.

(3) The third objection is that the matters presented by the defendant involve questions too remote and too far-removed from the questions which the court has already considered and which the proofs cover to be considered in this proceeding and without a new suit or a new proceeding. As was pointed out in the case of Kalamazoo vs. Proudfit Loose Leaf Company, cited by the plaintiff, such questions "can be safely left to the discretion of the (trial) court." The same rule, however, controls the action of the Master. I have no power or authority other than to execute the order of reference. The question rests solely for determination with the District Judge. The objection necessarily is overruled.

II

The matters for consideration by me are controlled by the Order of Reference requiring me to report both as to matters of fact and in matters of law whether the devices submitted to the Court or similar devices which may be submitted before me, constitute infringements of any of the claims of Gullborg or Zerk Patents.

The plaintiff insists before me that the consideration of the device or devices known in the record as a "pin fitting," is unwarranted as being too remote and too far-removed from the issues joined in the original cause, that the plaintiff had not charged the defendant with infringement of the manufacture, sale or use of any sort of pin fitting. As pointed out, the question has been referred to me by the District Judge and I am bound. Certain pin fittings were [fol. 62] presented and filed with the original and supplemental petitions and the order of reference followed. Thus the ruling on the objection reserved at the hearing as appearing on page 112 of the transcript of the proceedings before me is overruled, as I am bound by the terms of the order of reference. That issue must necessarily be decided by the Judge in a proper proceeding, e. g. a motion to revoke or modify the order of reference.

III

Under the original and supplemental petitions the defendant submits a device known as a coupler and marked Exhibit "A." A section of the same device is introduced and marked Exhibit "A-1."

This device, or "coupler," and its functions are described by the expert witness, who was qualified without objection and whose qualification was in fact admitted, as a structure which consists of a main body, external screw-threaded and a cap or end piece co-operating with the screw thread so that the whole may be assembled. In the cap there is a hole and slot which accommodates and permits co-action with a fitting. The method of co-action is upon inserting or placing the complete coupling upon the fitting and turning the coupling around upon the fitting. The two ends which stand out from the side of the fitting engage with an internal screw thread or cam which has upon its surface serrations or projections readily disposed for the purpose of engaging the projecting pegs of the fitting and

preventing the easy unscrewing of the coupler from the fitting. A plain flat annulus or circular flexible leather washer or gasket is inserted in a hollow provided in the end of the main body of the coupler, which washer is in a fixed position and is incapable of any sliding, reciprocating movement. As a coupler is screwed upon the fitting the main bodies of both approach and the surface of the fitting, containing a valve is brought into contact with the washer, the object being to secure a tight joint between the end of the fitting and the body of the coupler, so that if material under pressure is applied to the passage through the coupler it will not leak from the joint made by the washer or gasket, while the serrations on the surface of the interior interrupted screw thread are sufficient to prevent the complete coupler from inadvertently becoming detached from the fitting, yet the coupler can be disconnected from the fitting by hand effort. That the only result of the union of the coupler and the fitting would be to squeeze the washer, [fol. 63] make it thinner thereby, but forming the seal against leakage. There is no spring or any resilient means within the coupler whereby the washer can be made to slide within the coupler, the washer must remain in its fixed position.

The coupler device in Gullborg Patent 1,307,734, is described in claims 1, 2, 3, 4, 5, 6 and 7 (so far as material to the question of patentability, invention and infringement) as "a perforated dealing disk slidably mounted in the enlarged portion of said bore, or mounted to reciprocate in the bore of said coupling member and a spring confined between the ends of said conduit and said disk for urging said disk against said first-named coupling member, or means for yieldingly urging said sealing disk against the closed end of said first-named coupling member." Claim 8 is aptly described as "means for sealing the joint between said coupling member and for removing excess lubricant from the adjacent ends thereof when said coupling members are uncoupled." That these are true and accurate descriptions are substantiated from an inspection of the devices introduced in the record, the testimony of the expert witness, introduced by defendant, and the opinion of Judge Denison, 18 Fed. (2d) 29, page 35, holding: "Gullborg substituted a cup-shaped perforated washer, which was spring-pressed into sealing contact with the head of the fitting." Gibson

testified that the new device submitted by the defendant had none of the novel elements of the Gullborg Patent. It has also been strongly urged and argued by counsel. I have no difficulty in agreeing. Devices "A" and "A-1" have a plain, flat sealing washer or gasket and which is rigidly and fixedly supported in one end of a tubular metallic member, which is rendered incapable of sliding and is not actuated or yieldingly urged by a spring or any resilient element.

Thus, I find as a matter of fact, that this device Exhibit "A" is not an infringement of the claims of the Gullborg Patent.

IV

Under the original and supplemental petitions the defendant submits a device known as a coupler and marked Exhibit "B", a section of the same device is introduced and marked Exhibit "B-1."

This device or coupler, and its functions, are described by the witness introduced on the hearing as provided with bayonet slot means for engaging the fitting and for the pur- [fol. 64] pose of sealing against leakage of the liquids passing through under pressure.

There is a screw thread provided in the outer member of the coupler for the purpose of advancing the outer member by hand, and so, in turn, advancing the inner member with the sealing washer against the face of the fitting. Similarly, by reversing the operation, unscrewing the outer member, the seal is released and the coupling may be removed from the fitting. The sealing member of the coupling device is a plain, annular washer, apparently of leather. The leather washer is incapable of any sliding or reciprocating motion within the coupler. It is in a fixed relation to the coupling and there is no possibility of its moving from the recess in which it is placed. There are no yieldable means or spring for yieldingly urging the sealing disc or leather washer in the coupler and no means for influencing the washer in any way, except insofar as it will be compressed when the coupler is tightened down upon the fitting.

The coupling device in Gullborg Patent, 307,734, was fully described by me under Section III in considering the elements of defendant's coupler Exhibit "A." The element or elements of novelty and invention were clearly set forth in the opinion of Judge Denison and are clearly understood by all parties interested in the cause.

The witness testified that the new device, Exhibit "B", submitted by the defendant, contained none of the novel elements of the Gullborg Patent as set forth in claims 1, 2, 3, 4, 5, 6 and 8.

Upon the proof and a careful consideration of the entire record I have no difficulty in distinguishing essential differences between the devices. Device Exhibit "B" contains a gasket-supporting tubular member, and on the coupling end has an annular perforated flat "gasket" fixedly mounted. This tubular member is encased in a member that may be termed a "coupling sleeve," which rotates freely around it. This "sleeve" is made in two parts; first, a "bayonet-slotted" part that engages the "fitting" and, second, the larger of the two, which may be termed the "handle part", both connecting in an adjustable manner by the means of a "screw thread" interlocking so that a rotation of the "handle" member of the sleeve will draw the "bayonet-slotted" member to it, thereby drawing the gasket in the free end of the tubular gasket-supporting member tightly against the end of the "fitting."

Thus, there is a clear field of difference in the two de- [fol. 65] vices. It is argued by counsel that it should be characterized as a solid gasket and "screw thread union," with permitted use as held by Judge Denison. The differences are marked and I can see no element of novelty or invention common to both.

Thus, I find as a matter of fact, that defendant's Exhibit "B" is not an infringement of the Gullborg Patent.

V

Under the original and supplemental petitions the defendant submits a device known as a coupler and marked Exhibit "F," a section of the same device is introduced marked Exhibit "F-1."

This device or "coupler," and its functions, are described by the witness introduced on the hearing as consisting of two main parts, one having an orifice and a bayonet slot for engagement with a fitting; the other main part with a screw within the first part and contains a common leather washer which may be forced up against the end of the fitting by the use of the screw thread, thereby a seal is effected by the leather washer between the coupling and the fitting; to reverse it the part of the coupling containing the washer is

unscrewed and the coupling removed; that the tightening of the seal or the squeezing of the washer by the screw action of the main part is accomplished by hand. The witness further states that in the construction of the device there cannot be found anywhere an embodiment of the structural elements defined in Claims 1, 2, 3, 4, 5, 6 and 8 of the Gullborg Patent by such restrictions and limitations as a "perforated sealing disc slidably mounted, and a spring confined between the ends of said conduit and said disc."

That this is true needs but an inspection of the device, and my examination of it confirms the description. The means for effecting the seal between the fitting and this coupler is a flat annular leather washer or a flat sealing gasket, which is rigidly and fixedly supported in one end of the tubular metallic gasket-supporting member or "screw head." The washer or gasket is incapable of sliding and is not actuated or yieldingly urged by any spring or like resilient element, which characteristic or element is the novelty of the claims of the patent, as held by Judge Denison.

This device is identical in structural characteristics with the other two couplers submitted and should be classed as a "solid gasket" and "screw-thread union."

The difference between the coupler of the Gullborg Pat-[fol. 66] ent and this device is marked, and I can see no element of novelty or invention common to both. Thus, I find as a matter of fact that defendant's Exhibit "F" is not an infringement of the Gullborg Patent.

VI

Under the original and supplemental petitions the defendant submits a device known as a "pin fitting" and marked Exhibit "C", a section of the same device is introduced and marked Exhibit "C-1."

This device or "pin-fitting," and its functions, can be described as a tubular body, one end externally threaded to fit a standard ⅛" pipe thread; at the other or free end thereof, a bayonet pin is extended through the body with the two ends of the pin projecting a suitable extent on either side providing the bayonet projections or lugs of the bayonet connection; an internal valve seat at its upper or free end and a corresponding closure or ball check-valve,

which closure is carried by a "U" shaped member which straddles and extends below the bayonet pin, which "U" shaped straddler in turn is yieldably carried by a spring positioned below the bayonet pin, the lower end of the member furnishing the abutment for the spring. This spring is not confined between the bayonet pin and closure.

The witness introduced at the hearing compared the device with the structures set out and described in claim 14 of the Gullborg Patent, and stated that the device did not correspond with a grease cup comprising a tubular member having one end flanged inwardly to provide a closure seat, a closure, a pin extending through said tubular member from both sides thereof and a spring confined between said pin and closure and tending to hold said closure on its seat; that the device had a ball-bearing valve co-operating with a spring but that it was disposed at the end of the tubular body to the valve and was not confined between the bayonet pin and the ball valve, or the closure. The same statement was made in connection with claim 15 of the Gullborg Patent.

In the opinion by Judge Denison the patentable novelty of Gullborg's Patent form of pin fitting was held to be that the pin which furnished bearings for the slot was made to pass through the fitting and furnish an abutment for the valve closing spring; that it is only that complete combination that can be patentable. When the pin becomes mere arms projecting from each side and the spring abutment [fol. 67] is otherwise furnished, it is only the common bayonet pin member.

This device is exactly identical with the Gullborg pin fitting in all particulars, except that the bayonet pin does not furnish the spring abutment, but the lower end of the pin fitting proper furnishes it and the spring is below the pin instead of being above it. A straddle member is used for this purpose. The invention and patentable novelty of the Gullborg Patent is clearly limited and is but an improvement upon an already common device. The functions performed by the two are identical and they are equivalent. In view of the fact, however, that the Gullborg Patent has been limited to the use of the transverse pin as the spring abutment, I find, as a matter of fact that defendant's Exhibit "C" is not an infringement of the Gullborg Patent.

VII

Under the original and supplemental petitions the defendant submits a device known as a "pin fitting," marked Exhibit "G," a section of the same device is introduced and marked Exhibit "G-1."

This device or "pin fitting," and its functions can be described as a tubular body or member, one end externally threaded to fit a standard ⅛" pipe thread. At the other or free end thereof, a bayonet pin is extended through the body with the two ends of the pin projecting a suitable extent on either side, providing the bayonet projections or lugs of the bayonet connection; a small aperture in the free end for receiving lubricating material, and lacks any valve and closure seat as well as any corresponding valve or closure for said aperture. It contains no spring of any character to co-act with a closure, nor does it have the free end flanged inwardly to provide a closure seat.

The witness introduced at the hearing compared the device with the structures set out and described in claims 14 and 15 of the Gullborg Patent and stated that it did not contain a closure or a spring confined between the closure and the pin, or in fact a closure, valve or spring.

This device or pin fitting is apparently a very common bayonet pin member or pin fitting, of no novelty or patentable invention and of very little commercial value or use. A mere inspection of this device discloses its simplicity and its common construction and use.

I find, therefore, as a matter of fact, that defendant's [fol. 68] Exhibit "G" is not an infringement of any of the claims of the Gullborg Patent.

VIII

The findings of fact reached by me are practically without dispute on the record, as the plaintiff at the hearing or in brief has not seriously contended that the devices submitted by the defendant are infringing in structural and mechanical form on the claims of the Gullborg Patent. The couplers introduced entirely lack the suction-producing function and it was this feature of the invention that gave much of the validity to the Gullborg Patent, as held by Judge Denison.

I have given this record most careful consideration owing to the questions of law and the large property rights involved, and have read and re-read it, hoping to arrive at the controlling issue or issues of fact and principles of law. The questions involved are not simple or easy of solution, but are difficult and complicated. The matter has been referred to me to find the facts and to report the law and I conceive it my duty under the order of reference to report the principles of law upon the facts found by me. Elaborate briefs have been filed by both parties and I have been compelled to give them assiduous consideration due to the fact that there is a sharp dispute between the parties of the opinion of the court in Lyman Manufacturing Company v. Bassick Manufacturing Company, 6 C. C. A. 18 Fed. (2d) 29, and that opinion, together with the opinion of the trial court, constitutes the law of the case as far as applicable to the facts found by me, and is controlling.

IX

It is insisted by the defendant that this reference is but one part of a collateral proceeding brought by the defendant and the question is whether or not the defendant is at liberty to make, sell, and/or use certain new devices in lieu of devices held by the court to have infringed claims 1, 2, 3, 4, 5, 6, 8, 14 and 15 of the Gullborg Patent, and the particular question before me is whether or not the new devices in themselves, or a lubricating system per se comprising them would infringe any of said claims. This question, it is insisted, should be answered by me by merely comparing the mechanical construction of the new devices or systems with the mechanical structures recited in each of said claims. [fol. 69] Thus, presenting a pure question of fact to be determined by me.

It is then insisted that if I should find that the new devices or a system comprising them per se are found as a fact not to infringe, then the question of law involved will be decided by the court upon briefs, pursuant to a motion now pending to modify the preliminary injunction; though counsel do construe, with some hesitation, the order of reference to empower me to report my conclusions of law insofar as they relate to the new devices. I do not conceive any escape from the necessity of reporting on matters of law arising upon my findings of fact. It is true

that my report must of necessity be confined solely to the new devices, or to a lubricating system comprising these new devices, to-wit: Coupler devices "A", "B" and "F", and fitting devices "C" and "G"; and not to any other devices or systems, and I have not considered the "mixed" or "mongrel" systems so designated by defendant and severely criticised both at the hearing and in brief, presented at the hearing by the plaintiff, except insofar as such evidence or presentation elucidates the facts or reflects in a measure the law controlling the use of the new devices of the defendant.

X

A rather novel presentation of the devices submitted by defendant has been made before me in the brief. At the hearing the devices, as separate units, were alone submitted for my consideration, but in brief they are coupled together into a so-called system and my decision urged in that aspect. It will thus be seen that the order of reference is broadened on the facts for there was referred to me the consideration of the new devices filed with the petitions, similar devices that may be submitted, and no "system" or "combination" of devices was referred. The plaintiff has not criticised this presentation of the devices and I will therefor so consider them, so that in a proper manner the parties may have advantage of my findings.

The new device or "system of lubrication" is made up, as insisted by the defendant, of

1. Any grease gun (of any old construction).

2. Any hose (of any old and well known construction).

3. One of the three new "coupler" devices, "A", "B" (and "F", attached to the free end of the hose).

[fol. 70] 4. Either one of the two new "pin fitting" devices (Exhibit "C" or "G", cooperating with one of the "coupler" devices).

From these five new devices the defendant has theoretically constructed and exemplified six combinations or systems for lubricating means and has pictorially illustrated the same by six charts numbered from one to six.

It is urged that the defendant's couplers are of the "screw thread" and "gasket union" type, comprising a

fixedly mounted solid or flat perforated washer or gasket adapted to be pressed against the end of the fitting by a screw thread in the coupler; that the defendant's pin fittings are of the bayonet type, comprising a tubular body, a bayonet pin serving only to form opposed lugs for engagement with a bayonet coupler, said pin fitting having no valve-closing spring, supported by the bayonet pin or confined between the valve closure in the end of the fitting and the bayonet pin; that Gullborg's contribution to the old prior art was merely a specific construction in a "coupler" and a "fitting," making no claim to any specific construction in the compressor and hose. And it is true that Judge Denison held that Gullborg contributed but a specific improvement to the relatively generic patent of Winkley, the improvement pertaining to the form and resultant functions of Winkley's spring-pressed element for completing the seal, Gullborg substituting a cup-shaped perforated washer, spring-pressed into sealing contact with the head of the fitting instead of Winkley's cup, with top and sides complete, with the result that two additional functions were gained, first, that as the initial sealing was effected by the spring pressure it was intensified and made more effective by the pressure developed in the liquid itself; second, that by reason of the peculiar shape of the sliding member after it had been by the pressure of the fitting pushed up a substantial distance upon the dis-union of the parts the spring would throw it sharply down to its position of rest leaving a vacuum behind it, and an upward inrush of air into this vacuum through the restricted opening would create a suction which would pull up into the opening the grease which at the moment of dis-union had been below the opening and which otherwise would smear up the parts and impair the cleanliness of operation.

In respect to the pin fitting, Judge Denison held that Gullborg's pin fitting provided for the same pin which furnished bearings for the slot to pass through the fitting [fol. 71] and furnish an abutment for the valve-closing spring and that it is only this complete combination that can be patentable, that when the pin becomes merely arms projecting from each side and spring abutment is otherwise furnished it is only the already common bayonet joint member.

Defendant insists that each of its three new coupling devices have a plain, flat sealing gasket, stationarily and fixedly supported in one end of a tubular screw head, incapable of sliding and not actuated or yieldingly urged by any spring or like element, as called for by the language of each of claims 1, 2, 3, 4, 5, 6, 7 of the Gullborg Patent. And this is true as a matter of fact.

Similarly, defendant insists that one of its two new pin fittings has its spring positioned entirely below the bayonet pin and not confined between the pin and closure, as recited in claims 14 and 15 of the Gullborg Patent, while the second pin fitting not only lacks a spring but also lacks any valve or closure seat, as well as any corresponding valve or closure whatever, as recited in claims 14 and 15 of the Gullborg Patent. And this is true as a matter of fact.

Therefore, the defendant argues that its three couplers lack the fundamental patented feature of the Gullborg Patent, viz. a perforated cup leather sealing disc or gasket slidably mounted and yieldably urged outwardly by a spring with its novel and patentable functions heretofore described, but are of the screw thread and gasket union type; and that its two pin fittings lack the only novel and patentable structural feature of the Gullborg system in that one fitting has no valve seat, valve, or supporting spring at all and that the other has its valve or closure supported by a spring resting or abutting not on the cross or bayonet pin but on the base of the fitting.

This is the argument presented by defendant urging that the manufacture, sale or use of the new devices or a system comprising them would not infringe the plaintiff's rights under the Gullborg Patent, either in view of the scope of the claims 1, 2, 3, 4, 5, 6, 7, 8, 14 and 15, as determined by the language of the respective claims, or as determined by the construction of them by Judge Denison.

This is the crux of the question and it is not easy of solution, but formidable. The invention is novel or rather the method of use of the patented structures making up the terms of the patent are unusual, in that the pin fitting is detached from the compressor (meaning the complete [fol. 72] structure, including hose and coupler), and is attached to an automobile bearing or any other bearing to be lubricated and is not brought into a complete assembly until the compressor is attached to it, and it is then that the

invention is brought into full use, and all alleged infringements of the claims of the patent must be construed as of that time or moment. As was said by Judge Denison in Lyman Mfg. Co. v. Bassick Mfg. Co., supra, at page 33:

"The device is for the purpose of forcing lubricant into an interior bearing, and the situation at the moment of use must determine the character of the association of the parts."

It is true that the quoted expression was used on the question whether or not the Winkley patent was a true combination or a mere aggregation. It was held to be a combination. The claims of the Gullborg Patent all recite a combination of the various elements and these claims were held valid in that case, at least as I understand it, claims 1, 2, 3, 4, 7, 8, 14 and 15 were in issue and held valid, while 12 was held invalid for lack of novelty.

Defendant vehemently argues and insists that I should not consider the new parts in combination with or in relation to any other device or system, especially with those of the plaintiff under the Gullborg Patent, but should treat them separately and apart and unto themselves, and so reporting the findings of fact the ultimate solution of infringement should rest with the District Judge upon the defendant's motion now pending to eliminate from the order of injunction the phrase or expression, "or adapted for use in systems or combinations embodying the same," the same meaning the invention described and claimed in claims 1, 2, 3, 4, 5, 6, 8, 14 and 15, claim 12 thereafter being held invalid, of the Gullborg Patent.

I cannot ascribe to this method for the solution of the intricate matters pending before me on this reference, but feel it incumbent to report findings of law upon the facts found by me to be established and reported herein. I may add parenthetically that doubtless the motion to modify the injunction by eliminating the above-quoted clause will involve the identical principles of law, but of that I have no concern or authority. It is but a coincidence.

This defendant stands convicted on this record of having [fol. 73] heretofore infringed the claims of the Gullborg Patent in suit and is now under a preliminary injunction prohibiting further violation. The record shows the character of the business of the defendant and the method by

which that business has been transacted. The record made before me does not disclose an intention to change the method of transacting that business and I feel at liberty to indulge the presumption that the defendant is engaged primarily in the sale of automobile accessories and also largely in the distribution of lubricating material. It is not likely that it will engage in the manufacture of equipment for the lubrication of automobiles in direct and open competition with the plaintiff, making and manufacturing a system or systems of its own, using elements and means now belonging to the public and residing in the public domain. Without relating the facts in detail leading to this conclusion, for they are well established, and the parties are fully cognizant of them, having been established in this cause both before the trial judge and before me, and reviewed in the case of Lyman Mfg. Co. v. Bassick Mfg. Co., supra, I find as a matter of fact that the defendant has submitted the new devices and will in the future use them under the same conditions as the old devices, and that the new devices or a system comprising them are designed, intended and adapted for use inter-changeably with the old devices or systems of the plaintiff, as a result of which it will contribute to the infringement of the claims of the Gullborg Patent in the same manner as it has heretofore contributed to the infringement of the same.

This finding partly grows out of the established trade conditions of the lubricating business, but principally because the defendant submits and offers the new devices upon the same basis as it used the old infringing devices. It is true that it shows a possibility of and a probable large demand for lubricating means and systems, both for automobile trade and in stationary machinery, such as mills, factories, laundries and bottling plants, but the defendant does not attempt to establish or show an intention to confine its business with the new devices or systems to such trade and as the devices are interchangeable and adapted for use with the plaintiff's devices and systems the conclusion is inescapable that the new devices will be made, sold and/or used with that intention.

[fol. 74] XI

With this finding of fact the finding of law is obvious. Judge Denison under similar circumstances in the case of

Lyman Mfg. Co. v. Bassick Mfg. Co., supra, has said that the case of Leedes & Catlin Co. v. Victor Co., 213 U. S. 301, 29 S. Ct. 495, 23 law ed. 805, was on all fours with the present one and I find the principle of law enunciated in that case to be controlling here—that the defendant submits new devices which do not meet structurally the claims of the Gullborg Patent when considered in and of themselves and apart from the devices or systems of the plaintiff, but seek to make, sell and/or use them ostensibly for its own system whereby there would be no infringement, but actually for use in connection with the patented devices or system of the plaintiff, whereby contributory infringement would result, and although the new devices submitted are either patented or unpatented the sale of them is beyond the rights of its maker and would constitute contributory infringement of the Gullborg Patent and the defendant may not make, sell and/or use such new devices submitted in this proceeding.

The same reasoning applied in the Lyman case, supra, bottom of page 38, as reported in 18 Fed. (2) 29, as in this and the facts are similar. By substitution of a few words the second paragraph of page 38 of that opinion will aptly apply to this case, and would read substantially as follows:

"When defendants put out their new devices nothing resembling them was upon the market excepting the plaintiffs', which had come into such general use, as above stated. It was natural that the 'pin fitting' should have been made of the same external size and thread as plaintiffs' because the grease cup tap holes had been standardized; but in other respects defendants' selection of precise form, size and shape of the pin fitting and bayonet-slot connection of the coupler could have no purpose, except to enable them to be joined with plaintiffs compressors and in fittings for the practice of the particular invention * * * This is contributory infringement."

And I so find the fact to be and the rule of law applicable to those facts pertaining on this record.

[fol. 75] XII

It is evident, too, that the combination of any one of the new devices submitted by defendant with the compressors, couplers and pin fittings of the plaintiff are readable on the

claims of the Gullborg Patent. This is true by reason of the generality of the various claims in all particulars, except as each claim selects one of the elements in particular and describes its structure and function in detail. This was demonstrated on the trial and it was this demonstration on the part of the plaintiff which the defendant so seriously resisted and objected to but it showed in a graphic way that the new devices of the defendant are interchangeable with the plaintiff's system, are adapted for the purposes and, as we have found, intended to be so used by the ultimate user. These claims have all been held valid by Judge Denison, and it has been further held that the question of infringement must be determined as of the moment when all the parts of the combination are brought into use—usually, as we have seen, by the individual car owner when greasing the car or by a service station or garageman when employed so to do.

Hence, I determined and hold that such evidence was entirely competent and material and find as a fact that the use of said new devices in cooperation with plaintiff's devices or system would constitute direct infringement and the manufacture, and/or sale of the same by the defendant would constitute a contributory infringement.

XIII

In order to make the attempt to clarify my holdings and findings, but at the risk of being guilty of suggesting a moot question or judging a matter not presented by the record and wholly extra judicial, it would appear that the defendant may not make, use and/or sell any devices interchangeable with the devices of the plaintiff as the facts are established on this record in regard to the existing conditions in the lubricating field and the purpose, intent and design with which defendant purposes to make, sell and/or use the new devices. This appears to be sound and conclusive of the rights of the parties in this cause based upon the facts developed in this record, and authority for it is clearly propounded by Judge Denison in Lyman v. Bassick, supra, page 37, paragraph 7. Defendant must manufacture its new devices in size and/or form different to those of the plaintiff, and sufficiently different in size and/or form so [fol. 76] as not to be adapted for use in plaintiff's system and to prevent interchangeability and direct infringement

by the ultimate user and to definitely repel and overthrow the inference, presumption and facts established on this record, that the new devices are intended to be used interchangeably in the plaintiff's patented system, which is contributory infringement.

If a reason for this rule of law is sought or deemed necessary to be stated, it may be found in the old principle that one must use its own property so as not to injure another, which, from olden times has been developed and enlarged and applied by the courts to unfair competition in trade between persons and corporations dealing wholly in unpatented products and also to trade between persons and corporations dealing in patented products. The defendant would then be in a position to establish and maintain a system of its own for use upon automobile bearings and b-arings on stationary machinery, etc., usually lubricated by the owner.

XIV

The above findings of fact and law appear to me to be conclusive of the issues submitted for my determination but it may not be amiss to observe, partly a repetition of a holding hereinbefore discussed, that the defendant in brief has broadened the order of reference by claiming and setting up a proposed new "system" of lubrication, made up of the several new devices by combining them into six combinations or "systems" which, of course, include the new "pin fittings," as a part thereof. The original pleading in the bill in this cause, charges, and the answer denies, contributory infringement in the manufacture, sale and/or use of certain devices as a part of the compressor or coupler and no issue was made as to a pin fitting. In fact the defendant answered that it had never sold pin fittings or a complete system, or any devices for purposes of a complete new installation. It appears in the record that the plaintiff is the owner of other patents covering the "pin fittings." Hence a decision in this cause concerning the "pin fittings" might not be conclusive of the rights found as other outstanding patents, not in issue, might affect and control the decision in this view. Were the matter presented as an original proposition I would be inclined to hold that any consideration of a new "pin fitting" device would be too remote from the issues joined by the parties in the origi-
[fol. 77] nal cause to be considered in a proceeding of this

nature and would confine it to a consideration of the compressor or coupler devices.

However, the greater includes the less and my findings include the "pin fitting" as a unit and as a component part of a "system" and it has been found that such use cannot be made.

XV

There is submitted in the brief of the plaintiff a series of suggested findings by me, which appear to have been answered hereinbefore, but at the risk of repetition and for the purpose of clearly setting forth findings that will meet all the issues raised, and so that the parties may have the benefit of them upon exceptions to this report, I shall briefly report my findings based thereon, but without the recitation of facts appearing in the record or citations of cases ruling the law.

(1)

I find as a matter of law that the District Court does not have jurisdiction to modify or construe an order or decree from which one of the parties has already perfected an appeal, that is obtained an order granting an appeal and filed its bond, or otherwise complied with the statutes or rules of court perfecting the appeal. A mere prayer for and grant of an appeal is not that perfection which transfers jurisdiction to an appellate court. This record showed at the hearing and now shows merely a prayer for and grant of an appeal. It was not perfected and the cause still remains in the trial court. And, too, the nature of the proceedings pending before me is such as not only do not seek to modify, amend, or reverse the order of preliminary injunction entered in the cause, but present the new devices under its terms and provisions, hence recognizing its validity, and I hold such a proceeding would have been valid and permissible even had the appeal been perfected, by filing bond and taking such other steps as required by law.

(2)

I find as a matter of fact that the new compressors and couplers submitted by the defendant are adapted for use in conjunction with the patented "pin fittings" of the plaintiff.

[fol. 78] (3)

I find as a matter of fact that the new pin fittings submitted by the defendant are adapted for use in conjunction with the patented compressors, referring to the patented couplers of the plaintiff.

(4)

I find as a matter of fact that it is established on this record that the manufacture, and/or sale of the new devices of the defendant would inevitably result in the use of the same in conjunction and combination with the devices of the plaintiff and in its system of lubrication.

(5)

I find as a matter of fact that the manufacture, and/or sale of the defendant's new devices would be made with the knowledge and intent of the use thereof, as found in findings No. 4, just preceding.

(6)

I find as a matter of law that such manufacture, sale and use of the defendant's new devices, as found in No. 4 and No. 5, preceding, would violate the preliminary injunction in force in this cause.

(7)

I find as a matter of law that such manufacture, sale, and/or use as found in No. 4 and No. 5, preceding, would be violative of the principle of law propounded by the United States Supreme Court in the case of Leeds & Catlin v. Victor, supra, as being contributory infringement of Gullborg's Patent 1,307,734, in view of the facts and law substantiated, in my opinion, by the opinion of Judge Denison in Larkin Mfg. Co. v. Bassick Mfg. Co., supra.

(8)

I find as a mixed question of law and fact that the consideration by me of the completely assembled "public system," as proposed by defendant, has broadened the scope of the order of reference, in view of the fact that the issues joined in the original cause do not cover an infringement of

a "pin fitting" and the issue raised in this proceeding is remote in that respect. But my findings make the question immaterial, although the question of "remote issue" is not [fol. 79] to be decided by a Master.

(9)

It is requested that I find that the defendant's attempt to raise the proposition of and submit a completely assembled "public system" of lubrication is merely "to propound the same subterfuge which the Supreme Court looked through as to disc records." (Lyman vs. Bassick, 6 C. C. A. 18 Fed. (2d) 29 at page 38.) This requested finding is neither a question of fact nor of law, but argument purely.

(10)

I find as a mixed question of law and fact that even if it should be conceded in the absence of pertinent pleading and proof that the completely assembled "public system" as proposed by the defendant should be held as falling outside the scope of the claim of Gullborg Patent 1,307,734, the manufacture, sale, and/or use of such "public system" and the component parts or elements should be enjoined in this suit under the principle of law announced by the Supreme Court in Leeds & Catlin v. Victor, supra, for the reasons hereinbefore pointed out. Conditions in the future may change and these new devices of defendant conceded to rest in the public domain and to contain no novel and patentable feature or principle, may be so made or constructed as not to infringe upon or violate the patented monopoly of the plaintiff and no doubt could then be used with an innocent intent, and not, as on this record, with the guilty knowledge and intent of unfairly encroaching upon the monopolistic patent rights of the plaintiff.

XVI

In conclusion, for the purpose of particularly responding to all questions of fact and law raised before me in this proceeding, I shall answer the insistance of defendant, so greatly relied on, that Judge Denison held that the defendants in that case were at liberty to use a screw-thread or gasket union because it was public property.

It will be particularly noted that the defendant on page 28, paragraph 4, of its brief filed before me, states that:

"In fact, the Court had before it just the type of 'compressors' (comprising 'gun,' hose and coupler) which [fol. 80] comprise defendant's newly submitted 'public system' of lubrication, as will be evident from the following language of the Court:

" '*A stationary packing, crowded against its support by an advancing screw head,* makes a tight joint, for the time, and while not disturbed, but when compressed or worn by long or frequent use, the screw must be further advanced, or the joint leaks, * * * It may be said, as usual in such cases, that *the defendants are at liberty to use a screw thread and gasket union.* One of the defendants tried to, but gave it up and adopted the secondary sliding element, giving the automatically adjustable intensive seal.' "

Yet the court denied the particular defendants in those causes the right to use that type of compressor upon two principal grounds, as I interpret the decision, first, not the right of "repair and replacement" but upon the alleged right to sell an unpatented article in spite of the infringing use of it which is to be made—an exception to the rule of contributory infringement, where such article was of a temporary and consumable character, second, upon the rule enunciated and established in Leeds & Catlin vs. Victor, supra.

The defendant on this record appears to be in the same situation as the defendants in those causes, at least I can find no fundamental or controlling difference, and hence cannot be permitted to make use of the screw-thread and gasket union principle, upon the facts proven and developed on this record, although it rests in the public domain of mechanical principles.

XVII

Since the preparation of the above part of this report, the defendant has submitted and filed a reply brief to which I have given careful consideration, and it is apparent that the defendant is earnestly and conscientiously insisting upon an alleged legal right to use non-infringing devices in the system of the plaintiff and feels that it is entitled so to do under established principles of patent

law. Recognizing this urgent insistenee and in order that no possible theory or proposition of law or fact that might affect the decision in this cause be overlooked, I have, as stated, given the reply brief careful study and shall take pains in answering each proposition therein contained and [fol. 81] it may possibly clarify any vagueness or uncertainty in my findings hereinbefore expressed.

1. In my opinion the bill of complaint does not merely charge contributory infringement but its averments are broad enough to prove both direct and contributory infringement of the Gullborg and Zerk Patents. The proof showed, however, contributory infringement.

3. It is insisted that the pleadings are broad enough to warrant proof of the issues on the petitions to use new devices. The bill is broad. Infringement of the Gullborg and Zerk Patents alone was charged. It may be that other patents exist that are not averred in the bill. Only Gullborg Patent 1,307,734 was introduced and insisted upon before me on the issues presented and both parties agreed that it was the only material patent.

If it should be insisted that the issues are too narrow to admit proof of defendant's "pin fittings," which the plaintiff has done before me, it is important to state that a full hearing was had and a broad latitude given both parties to present all the proof and argument deemed necessary. The plaintiff did not request further time for additional evidence and was accorded every opportunity to fully develop its proof and to meet the proof offered by the defendant. Hence this record shows no lack of opportunity on the part of the plaintiff to meet the issues submitted by the defendant and no request of any character for further or additional time. These facts would tend in a measure to cure the bill of "remote" issue raised by the plaintiff, unless there should be other outstanding valid patents that have not been pleaded in this cause.

6. Counsel for both parties have taken issue as to the character of "coupler" referred to by Judge Denison in his opinion. I have read the parts of the record of that case pointed out to me by both counsel, and as best I can interpret the testimony the coupler referred to was of the "screw-thread and gasket union" type, identical, or at

least similar to the type of coupler introduced before me. And I may add that I have so considered it throughout the entire hearing and this report. I do not think that counsel for plaintiff is justified on the record of that case, so far as pointed out to me by counsel and examined in seeking to differentiate the coupler device introduced before me. Of course the coupler is not physically exhibited, nor have counsel pointed out an illustration of it, but I hold that the reference of Judge Denison was to a coupler device at least similar in principle to that exhibited herein.

[fol. 82] XVIII

1. I cannot agree with counsel for defendant that Judge Denison's opinion appears to be clear that the public may connect to the Gullborg grease cups or pin fittings any compressor which does not respond to the Winkley and Gullborg claims, as, for instance, a compressor having a screw-thread and gasket union coupler. Reasons for my interpretation will hereafter appear.

2. I cannot agree with counsel for defendant that Judge Denison's opinion appears to be clear that the public may make grease cups or fittings of the "common bayonet pin" type, to which Gullborg's "coupler" may be connected, providing the pin of said grease cups are "mere arms projecting from each side and the spring abutment is otherwise furnished." Reasons for my interpretation will hereafter appear.

XIX

Under paragraph X page 25 of this report, I found as a fact that the new devices or a system comprising them are designed, intended and adapted for use interchangeably with the devices or system of the plaintiff.

This finding in regard to intended use was reached by me not on direct evidence but by inference from established facts, which in my opinion conclusively proved the finding. On pages 8 and 9 of the defendant's reply brief filed before me the following admissions of record are made:

"As stated in the Answer as well as the defense affidavit, and as acknowledged by plaintiff in its brief on page 29, defendant did at no time make, sell or distribute 'fittings.' Neither is it the present intention of defendant to make,

sell or distribute any 'fittings' or grease cup in the future, of the non-infringing type authorized by Judge Denison and *illustrated* by the 'fittings' submitted by defendant as Exhibits 'C' and 'G'.

"As stated by defendant originally, and as acknowledged by plaintiff in its brief, on page 29, defendant's sole interest lies in a non-infringing 'compressor' clearly authorized by Judge Denison, which does 'not respond to the Winkley and Gullborg claims, but which can be used with plaintiff's fittings', the latter (fittings) having been sold to the public outright by plaintiff, under its Gullborg patent No. 1,307,733."

[fol. 83] Thus the finding of fact referred to is expressly admitted of record and it is established that the new devices are to be made and used with the knowledge and intent of interchangeable use in and with the system of the plaintiff. This fact is the controlling one in this litigation and it is my opinion that the defendant would violate the patent rights of the plaintiff under such established facts. It seems to me that this rule of law is set forth in Judge Denison's opinion and I pointed it out on page 36 of this report. It is: That one may use or sell an un-patented article in spite of the infringing use of it which is to be made where such article is of temporary and consumable character, such as a paper roll, but not where it is of a permanent character and designed to last the life of the patented article. Such is the character of the compressors and fittings of the Gullborg patent, as held by Judge Denison, not in direct terms but by plain and inescapable inference. I cannot read the opinion in the light of the decree rendered and accord to it any other meaning. Then, too, the rule of law enunciated in Leeds & Catlin Co. v. Victor, supra, which has hereinbefore been discussed and likewise held, in my opinion, by Judge Denison, would prevent the use by defendant of the new devices under the facts established in this proceeding and the above quoted solemn admission made of record.

Defendant

Complainant should not overlook the fact that Judge Denison has held to be valid claims 14 and 15 of the Gullborg Patent. It is beyond my power, as well as that of the District Court, to limit the effect of that decision under

facts almost identical and at least similar to those established herein, but the question must be presented to the appellate court for a further construction, interpretation and limitation of the scope of claims 14 and 15, if valid reason therefor appear. I am ready to agree that so construed a very broad, in fact much too broad, scope is given in my opinion, to claims 14 and 15. It virtually gives an exclusive monopoly to a mere patented device and it excludes all use for the same purpose of another device, whether patented or unpatented. To use the new patented or unpatented device interchangeability as to form and dimension must be lacking, virtually requiring a complete system on the part of a competitor that cannot be interchangeably used. The solution of this problem under the facts and decisions as now existing rests, in my opinion, with the appellate courts, certain it is, a lower court cannot limit [fol. 84] the scope of claims 14 and 15 under the authority controlling the courts of this circuit, if the decision be clearly understood and interpreted.

I am further ready to agree with the concluding paragraph of the reply brief that it is no infringement to furnish a "compressor" minus a "coupler," in other words, the pump and hose elements adapted to receive a Gullborg alemite coupler of plaintiff's manufacture. These two devices are public property; but that question is not presented on this record and the argument and my finding are entirely gratuitous. But, again, it is not permissible to furnish the pump and hose element adapted to receive a non-infringing coupler, if it is furnished with the knowledge and intent that it will be used in the patented system of the plaintiff. This follows as a consequence of the principles of law hereinbefore stated and discussed.

I find, therefore, and respectfully report, that in my opinion, the petition and supplemental petition should be dismissed and the right denied defendant to use the new devices submitted thereunder.

The testimony adduced before me on this reference was reported and I submit with this report the testimony, adduced, and the exhibits thereto, all properly identified.

All of which is respectfully submitted.

Albert G. Riley, Standing Master.

October 15, 1927.

[fol. 85] IN UNITED STATES DISTRICT COURT

PLAINTIFF'S EXCEPTIONS TO THE REPORT FILED OCTOBER 15, 1927, OF THE STANDING MASTER ON ORDER OF REFERENCE OF APRIL 20, 1927—Filed Nov. 3, 1927

And now comes The Bassick Manufacturing Company, plaintiff and excepts to the report of Albert G. Riley, the standing master, filed in this cause on the 15th day of October, A. D. 1927, and for cause of exception shows:

(1) That the master has in his said report stated on page 12 that,

"This device (the Exhibit F coupler submitted by the defendant) is identical in structural characteristics with the other two couplers submitted and should be classed as a 'solid gasket' and 'screw-thread union'."

The phrases thus quoted by the master are taken from the opinion of the Sixth Circuit Court of Appeals in Lyman v. Bassick and the allied cases referred to in the master's report. The "solid gasket" and "screw-thread union" referred to in the said opinion of the Sixth Circuit Court of Appeals was exemplified by plaintiff's Exhibits No. 107, No. 112 and No. 126 in the case of The Bassick Manufacturing Company v. The O. K. Manufacturing Company and was and is of a class having quite different structural characteristics than the Exhibit F or other couplers submitted by the defendant herein. The "screw-thread" and "gasket union" to which the opinion of the Sixth Circuit Court of Appeals referred saying that "one of the defendants tried to (use it) but gave it up, and adopted the secondary sliding elements giving the automatically adjustable intensive seal" was, as shown by the aforesaid Exhibits, of a kind in which the fitting was externally screw threaded and in which the coupler was interiorly screw threaded so that the coupler was attached to the fitting by screwing the female threads of the fitting by screwing the female threads of the coupler over the male threads of the fitting. It was this construction which the opinion of the Court of Appeals referred to as "a screw-thread and gasket union" and which one of the defendants tried to use but gave it up and adopted the secondary slid-

ing element which gives the automatically adjustable intensive seal.

The same error underlies and is incorporated in the following statement appearing on page 39 of the master's report:

[fol. 86] "The coupler referred to was of the 'screw-thread and gasket union' type, identical, or at least similar to the type of coupler introduced before me. And I may add that I have so considered it throughout the entire hearing and this report. I do not think that counsel for plaintiff is justified on the record of that case, so far as pointed out to me by counsel and examined, in seeking to differentiate the coupler devices introduced before me. Of course, the coupler is not physically exhibited, nor have counsel pointed out an illustration of it, but I hold that the reference of Judge Denison was to a coupler device at least similar in principle to that exhibited herein."

(2) That the master on page 14 of his report states:

"In the opinion of Judge Denison the patentable novelty of Gullborg's patent form of pin fitting was held to be that the pin which furnished bearings for the slot was made to pass through the fitting and furnish an abutment for the valve closing spring; that is only that complete combination that can be patentable,"

whereas, the statement of the opinion of the Sixth Circuit Court of Appeals was:

"We see no reason for denying the patentable novelty of Gullborg's particular form fitting, by reason of which it has come to be called a pin fitting, and by which the same pin which furnished bearings for the slot was made to pass through the fitting and furnish an abutment for the valve closing spring; but it is only this complete combination that can be patentable; when the pin becomes mere arms projecting from each side, and the spring abutment is otherwise furnished, we have only the already common bayonet joint member."

(3) That on page 14 of his report the master states relative to defendant's Exhibit C fitting and to the fitting of the Gullborg patent in suit, that:

"The functions performed by the two are identical and they are equivalent. In view of the fact, however, that the Gullborg patent has been limited to the use of the transverse pin as the spring abutment, I find, as a matter of fact, [fol. 87] that defendant's Exhibit C is not an infringement of the Gullborg patent,"

whereas, the Gullborg patent was not and has not been limited to the use of the transverse pin as the spring abutment. Furthermore, the defendant's Exhibit C fitting is, as stated in the above quoted portion of the master's report, an equivalent and performs identical functions. It is, therefore, an infringement at least in the sense employed by the master in stating his conclusion that "defendant's Exhibit 'C' is not an infringement of the Gullborg patent."

(4) That on page 42 of his report the master states,

"I am ready to agree that so construed a very broad, in fact much too broad, scope is given, in my opinion, to claims 14 and 15,"

whereas, the construction referred to as required by the rule of law enunciated by the United States Supreme Court in Leeds & Catlin v. Victor, 213 U. S. 301, and by the Sixth Circuit Court of Appeals in Lyman v. Bassick, 18 Fed. (2) 29, does not give too broad a scope to claims 14 and 15 of Gullborg Patent 1,307,734.

Williams, Bradbury, McCaleb & Hinkle, Lynn A. Williams, Solicitors and Counsel for the Plaintiff, The Bassick Manufacturing Company.

IN UNITED STATES DISTRICT COURT

DEFENDANT'S EXCEPTIONS TO THE MASTER'S REPORT FILED OCTOBER 15, 1927—Filed Nov. 5, 1927

Now comes defendant by its counsel and excepts to the Master's report as to certain items specified, infra,

[fol. 88] 1. For that the Master after holding:

(A) That defendant's newly submitted coupler devices "A", "B" and "F" are not infringements of the claims of the Gullborg patent in suit,

"Thus, I find as a matter of fact, that this device Exhibit "A" is not an infringement of the claims of the Gullborg patent." (P. 8, Master's report.)

"Thus, I find as a matter of fact, that defendant's Exhibit "B" is not an infringement of the Gullborg patent." (P. 10 Master's Report.)

"Thus, I find as a matter of fact that defendant's Exhibit "F" is not an infringement of the Gullborg patent." (P. 12 Master's Report.)

And

(B) That each of the couplers "A", "B" and "F" submitted by the defendant exemplify the "screw thread and gasket union" referred to by Judge Denison, in his opinion, and as to which Judge Denison held that the defendants were at liberty to use this type of coupler:

"Thus, there is a clear field of difference in the two devices" (Defendant's newly submitted Coupler "B" on one hand and plaintiff's Gullborg coupler, on the other hand). "It is argued by counsel that it should be characterized as a solid gasket and "screw thread union," with permitted use as held by Judge Denison. The differences are marked and I can see no element of novelty or invention common to both." (P. 10 Master's Report.)

"This device (coupler "F") is identical in structural characteristics with the other two couplers submitted (Couplers "A" and "B") and should be classed as a "solid gasket" and "screw-thread union." (P. 12 Master's Report.)

* * * "as to the character of "coupler" referred to by Judge Denison in his opinion * * * as best I can interpret the testimony the coupler referred to was of the "screw thread and gasket union" type identical, or at least similar to the type of coupler introduced before me. And I may add that I have so considered it throughout the entire hearing and this report. * * * I hold that the reference of Judge Denison was to a coupler device at least similar in principle to that exhibited herein."

[fol. 89] then found or assumed that the manufacture, use or sale of the foregoing non-infringing structures would constitute contributory infringement of said Gullborg patent.

2. For that the Master after holding that defendant's newly submitted "fitting devices or grease cups "C" and "G" are not infringements of the Gullborg patent:

"* * * I find, as a matter of fact that defendant's Exhibit "C" is not an infringement of the Gullborg patent." (P. 14 Master's Report.)

"* * * I find, therefore, as a matter of fact, that defendant's Exhibit "G" is not an infringement of any of the claims of the Gullborg patent." (P. 16 Master's report.)

then found or assumed that the manufacture, sale or use of said "fittings" or "grease cups" "C and G" would constitute contributory infringement of said Gullborg patent.

3. For that the Master after holding that the manufacture or sale by defendant of a pump and hose adapted to receive a Gullborg coupler of plaintiff's manufacture would not constitute an infringement:

"I am further ready to agree with the concluding paragraph of the reply brief that it is no infringement to furnish a "compressor" minus a "coupler," in other words, the pump and hose elements adapted to receive a Gullborg alemite coupler of plaintiff's manufacture."

then assumed that the question was not presented by the record, the Master saying:

"These two devices are public property; but that question is not presented on this record and the argument and my finding are entirely gratuitous."

Defendant here respectfully points out that the last and third question was raised, presented and submitted in both defendant's briefs, and the record furnishes abundant warrant for affirmatively determining this latter item, No. 3.

Wherefore defendant respectfuly prays,

(a) That the foregoing exceptions be ruled on favorably to defendant, and

[fol. 90] (b) That the Master's recommendation as to defendants right to furnish a pump and hose adapted to re-

ceive a Gullborg Alemite coupler of plaintiff's manufacture, be adopted and ordered approved.

Respectfully submitted, E. Hayward Fairbanks, Leonard L. Kalish, Burch, Minor & McKay, Counsel for Defendant.

IN UNITED STATES DISTRICT COURT

AMENDMENT TO ANSWER—Filed April 20, 1928

Now comes defendant and by leave of Court obtained, amends its answer heretofore filed, in the following particulars, to-wit:

After paragraph 23 of the answer insert the following additional paragraphs:

(24) Defendant further answering avers, as a separate and distinct defense, that the matters and things complained of herein are now res judicata by reason of the final decree entered by his Honor, Joseph L. Bodine, on February 28th, 1928, in a case entitled in the United States District Court, District of New Jersey, Bassick Manufacturing Co. vs. The Frank Miller Co. (Equity No. 2759).

(a) Wherein, as shown by the Bill of Complaint, which is a substantial duplicate of the Bill of Complaint herein, the cause of action is identical with the cause of action herein, to wit: the Gullborg Patent No. 1,307,734 and the Zerk Patent No. 1,475,980;

(b) Wherein, as shown by the record, particularly the affidavits of J. E. Otis, Jr., and Elwood Hansmann on behalf of plaintiff, the issues of infringement involved are the same as the issues of infringement herein;

(c) Wherein, the plaintiff has shown by its record, partic- [fol. 91] ularly the affidavit of J. E. Otis, Jr., filed on behalf of plaintiff, that the plaintiff is identically the same as the plaintiff herein and that the defendant, The Frank Miller Co., is in privity with the defendant herein;

(d) Wherein the quality of the parties litigant is identical with the quality of the parties litigant herein; and

(e) Wherein the pleadings and proofs are the same as the pleadings and proofs herein.

(25) Defendant further answering avers that in the above identified cause of Bassick Co. vs. Frank Miller Co., Judge Bodine expressly denied plaintiff a decree of dismissal qualified by the term "without prejudice" and ordered said words "without prejudice" stricken from the decree, so that said decree of dismissal in said Frank Miller suit as finally entered by the District Court of New Jersey reads as follows:

"This cause having come on to be heard before the Court upon plaintiff's motion to dismiss, the same having been argued by counsel, and the Court being fully advised in the premises, it is

Ordered, that the above entitled cause be dismissed [without prejudice]*, with the taxable costs to the defendant to be taxed by the Clerk."

That the above entitled cause be discissed,

(Sgd.) Joseph L. Bodine, United States District Judge.

and said decree of dismissal is a final decree on the merits and conclusive as to all matters specifically disposed of thereby and also of all other matters which might have been disposed of in said suit as plaintiff's option. Said decree was entered on final hearing on bill, answer and the completed proof of said plaintiff and said defendant, and after the submission of said cause for decision. A copy of the bill, answer, final decree and other pertinent portions of said record in said New Jersey cause are filed herewith as Exhibit A.

And wherefore defendant prays for the entry of a similar decree of dismissal herein.

Burch, Minor & McKay, Solicitors for Defendant.
Leonard L. Kalish, E. Hayward Fairbanks, of Counsel for Defendant.

[fol. 92] Plaintiff's counsel consents that the foregoing amendment to the Answer may be entered with the same force and effect as if approved by the Court.

—— ——, Counsel for Plaintiff.

---

*[Words enclosed in brackets erased in copy.]

EXHIBIT "A" TO AMENDMENT TO ANSWER

UNITED STATES DISTRICT COURT, DISTRICT OF NEW JERSEY

In Equity

THE BASSICK MANUFACTURING COMPANY, Plaintiff,

vs.

THE FRANK MILLER COMPANY, Defendant

BILL OF COMPLAINT—Filed Apr. 26, 1928.

Plaintiff, for complaint against defendant, alleges as follows:

(1) Plaintiff, The Bassick Manufacturing Company, is a corporation organized and existing under and by virtue of the laws of the State of Delaware, a citizen of Delaware, a resident of, and having its principal place of business at Chicago, in the County of Cook, and State of Illinois.

(2) Defendant, The Frank Miller Company, is a corporation organized and existing under and by virtue of the laws of the State of New Jersey, a citizen of New Jersey, a resident of and having its principal place of business at Camden, Camden County, New Jersey, within the District of New Jersey, within which District it has committed acts of infringement of plaintiff's patents, of which complainant is made herein.

(3) Arthur V. Gullborg, a citizen of the United States, [fol. 93] being prior to December 21, 1918, the original, first, and sole inventor of certain new and useful improvements in Lubricating Means, filed and prosecuted lawfully, an application for United States Patent therefor, and, having complied in all due respects with the Statutes and the rules of the Patent Office, United States Patent No. 1,307,734 was granted lawfully and issued pursuant to said application on June 24, 1919.

(4) Oscar Zerk, a citizen of the United States, being, prior to November 21, 1922, the original, first and sole inventor of certain new and useful improvements in Lubricating Apparatus, filed and prosecuted lawfully, an application for United States Patent therefor, and, having com-

plied in all respects with the Statutes and rules of the Patent Office, United States Patent No. 1,475,980 was granted lawfully and issued pursuant to said application on December 4, 1923.

(5) Said inventions of Arthur V. Gullborg and Oscar Zerk, were new, useful, not known or used by others in this country before their respective inventions, not patented or described in any printed publications anywhere before their respective inventions, or more than two years prior to their respective applications, not in public use prior to their respective applications, not patented in any foreign country by them or their legal representatives on applications filed more than one year before their said applications in this country, and not abandoned. Said patents are now in full force and are hereby proffered and ready to be produced before the Court.

(6) Prior to the commencement of this suit, plaintiff became, by lawful assignments duly recorded in the United States Patent Office, and now is the sole owner of said United States patents Nos. 1,307,734 and 1,475,980, and of all rights thereunder and of all rights of action for infringement thereof.

(7) The inventions patented by said patents Nos. 1,307,734 and 1,475,980 are of great utility and are of great value to plaintiff, and of great benefit to the public. Plaintiff and its predecessors have sold very extensively and introduced into public use, devices in which said patented inventions are embodied, and the public and manufacturers have demanded and purchased from plaintiff and its predecessors, such devices embodying said inventions, in very large and in very rapidly increasing quantities.

(8) Plaintiff and its predecessors have marked all devices embodying said inventions made or sold by them, in full compliance with the United States Statutes.

[fol. 94] (9) The public has, in general, acknowledged the validity of the aforesaid patents Nos. 1,307,734 and 1,475,980 and has respected plaintiff's rights therein and thereunder.

(10) Heretofore, to wit: on September 17, 1925, The Bassick Manufacturing Company brought a suit against Mont-

gomery Ward & Co., Inc., in the United States District Court at Chicago, Illinois, and thereafter The Larkin Automotive Parts Company of Dayton, Ohio, intervened in said suit and became a party defendant therein. The said suit came on for final hearing before his Honor, Judge Walter C. Lindley, upon Gullborg patents Nos. 1,307,733 and 1,307,734 and Zerk patent No. 1,475,980; and the court, after hearing the evidence offered in behalf of both sides and upon briefs, rendered an opinion and entered a decree sustaining the said patents and finding them infringed. An appeal was taken by the defendants and argued in due course before the United States Circuit Court of Appeals for the Seventh Circuit, which rendered an opinion and entered decrees pursuant thereto, affirming the decree of the District Court. A copy of the said opinion and decree of the said Court of Appeals and the decree reviewed thereby is attached hereto and made a part hereof.

(11) The validity of the said Gullborg patent No. 1,307,734, was sustained and the patent found infringed by the United States Circuit Court of Appeals for the Sixth Circuit in certain appeals which were pending before, and decided by it. The said Court of Appeals rendered an opinion and entered decrees on March 18, 1927, as will more fully and at large appear from the copies thereof in the booklet submitted herewith and forming a part hereof, which includes the orders and decrees of the District Courts from which the said appeals were taken.

(12) United States District Courts in contested cases have adjudicated said Gullborg patent No. 1,307,734, upon final hearing or plaintiff's motion for a preliminary injunction in the following cases involving equipment similar to that sold by the defendant herein, and in numerous other cases decrees have been entered by consent, the defendants having satisfied plaintiff's claims for profits and damages.

[fol. 95]

Defendant	Location
Auto Equipment Company	Indianapolis, Ind.
Automotive Specialty Co.	New York
Ballou & Wright	Portland, Ore.
Champion Hy-Pressure Mfg. Co., Inc	New York.
Chanslor & Lyon Co.	San Francisco.

Defendant	Location
Cohen, John M. et al.	Boston, Mass.
Faught, A. E. et al.	Ft. Worth, Tex.
Gaines Motor Sales Co.	Wichita Falls, Tex.
Gibson Co., The	Indianapolis, Ind.
Gross, Ph. Hdw. Supply Co.	Milwaukee, Wis.
Hollingshead, R. M. & Co.	Memphis, Tenn.
Horst & Wilkinson	Davenport, Iowa.
Justus & Parker Co.	Columbus, Ohio.
Lowe Motor Supplies	New York.
Mills-Morris Co.	Memphis, Tenn.
Nichols, Dean & Gregg	St. Paul, Minn.
Orgill Bros. & Co., Inc.	Memphis, Tenn.
Post & Lester Co.	Hartford, Conn.
Pruden, W. E. Edw. Co	New York
Scott, John P.	Washington, D. C.
Stage Bros.	Lincoln, Neb.
Straus-Frank Co.	San Antonio, Tex.
Staff Bros. Co.	New York
Standard Products Co.	Wilmington, Del.
Taubman Automotive Co.	Baltimore, Md.

(13) Defendant, in violation of plaintiff's rights under said patents Nos. 1,307,734 and 1,475,980, and without any authority since the issuance of said patents, and within six years before the commencement of this suit within the District aforesaid, and elsewhere in the United States, has threatened to infringe and has infringed said patents Nos. 1,307,734 and 1,475,980, by making and/or using and/ or selling Lubricating Apparatus embodying said patented inventions and by making and/or using and/or vending devices designed and intended for use in apparatus embodying said patented inventions. Defendant threatens to continue to commit acts in violation of plaintiff's rights and in infringement of said patents, whereby plaintiff has been and will be greatly and irreparably damaged, and whereby defendant is about to obtain large profits which in equity will belong to plaintiff, the amount of which damages and profits plaintiff cannot ascertain except by an accounting.

Plaintiff therefore prays:

[fol. 96] (a) That defendant be required to answer this Bill of Complaint, but not under oath, answer under oath being hereby expressly waived.

(b) That the Court grant a temporary restraining order, a preliminary injunction pending this suit, and a perpetual injunction restraining the defendant, its agents, employees, associates and confederates, enjoining them from making and/or using and/or vending the combinations patented in said patents or any of the parts thereof, or any other devices embodying the inventions described and claimed in any of said patents or adapted to be used in systems or combinations embodying the same, either for original equipment or for replacement under the guise of "repairs" or otherwise, and from offering or advertising so to do, and from aiding or abetting or in any way contributing to the infringement of said patents or either of them.

(c) That this cause be referred to a Master to make and report an account of damages and profits, accruing from defendant's infringement of said patent, and that plaintiff have judgment for the damages and profits so found and for the costs of this suit.

(d) That plaintiff have such other and further relief as equity may require.

The Bassick Manufacturing Company, by (Sgd.) J. E. Otis, Jr., Vice-President. French Richards & Bradley, Samuel H. Richards, Solicitors of Complainant. Lynn A. Williams, Williams, Bradbury, McCaleb & Hinkle.

STATE OF ILLINOIS,
County of Cook, ss:

On July 1st, 1927, at Chicago, Illinois, before me personally appeared J. E. Otis, Jr., who, being first duly sworn testified that he is a Vice-President of The Bassick Manufacturing Company the plaintiff named in the foregoing Bill of Complaint; that he signed the same as such officer; that he has read the Bill of Complaint; that he has knowledge of the facts therein set forth, and that the allegations therein are true.

(Sgd.) Hattie R. Schooler, Notary Public. (Seal.)

[fol. 97] I hereby certify that the foregoing is a true copy of the original on file in my office.

George T. Cranmer, Clerk, per L. M. Zarp, Deputy.

UNITED STATES DISTRICT COURT, DISTRICT OF NEW JERSEY

In Equity

THE BASSICK MANUFACTURING COMPANY, Plaintiff,

vs.

THE FRANK MILLER COMPANY, Defendant

ANSWER—Filed July 26, 1927

To the Honorable Judges of the above entitled Court:

The answer of the above entitled defendant to the Bill of Complaint exhibited against it by the above named plaintiff.

1. Defendant has no information as to whether or not plaintiff is incorporated, organized and existing under and by virtue of the laws of the State of Delaware, whether it is a citizen of Delaware, whether it has its principal place of business at Chicago, and whether it is a resident of Chicago, County of Cook, in the State of Illinois, and therefore denies the same and leaves plaintiff to make full proof thereof.

2. Defendant admits the averments of its existence and organization under the laws of the State of New Jersey, [fol. 98] and as to its having a regular and established place of business at Camden, in the County of Camden, State of New Jersey.

3. Defendant denies having committed any act of infringement complained of either within the District of New Jersey, or elsewhere.

4. Defendant denies that Arthur V. Gullborg is a citizen of the United States, and denies that said Gullberg, prior to December 21st, 1918, was the original, first and sole inventor of certain alleged new and useful improvements in Lubricating Means; denies that at the date of filing said application, said Arthur V. Gullborg was a citizen of the United States, and defendant denies that said Gullborg

lawfully filed and prosecuted an application for United States Letters Patent therefor, and that the statutes and rules of the Patent Office were complied with in the filing and prosecution of said application and issuance of Letters Patent thereon, and therefore denies that Letters Patent No. 1,307,734 was lawfully granted and issued on June 24th, 1919, pursuant said application.

5. Defendant denies that Oscar Zerk is a citizen of the United States, and denies that said Zerk prior to November 21st, 1922, was the original, first and sole inventor of certain new and useful improvements in Lubricating Apparatus, and denies that he lawfully filed and prosecuted an aplication for United States patent therefor, and denies that he complied in all respects with the statutes and the rules of the Patent Office, and denies that patent No. 1,475,980 was lawfully granted and issued on December 4th, 1923, pursuant to said application.

6. Defendant denies each and every allegation in the fifth paragraph of the Bill, and particularly denies that said alleged inventions or any part thereof, were in fact inventions, that the subject-matter thereof was new or useful or not known or used in this country before the alleged inventions thereof by said Arthur V. Gullborg and Oscar Zerk, denies that the same were not patented or described in any printed publication anywhere before their alleged invention thereof, or more than two years prior to their said applications, denies that the same were not in public use or on sale in this country for more than two years prior to said applications, or not patented in any country by them or their legal representatives on applications filed more than one year before their said applications in this country, and not abandoned, and therefore denies that said patents are now in full force.

[fol. 99] 7. Defendant is not advised as to whether or not plaintiff is now the sole owner of said United States Letters Patent here in suit, and of all rights therein and all rights of action for infringement thereof, as alleged, and therefore denies the same and leaves plaintiff to make full proof thereof.

8. Defendant denies each and every allegation contained in the seventh paragraph of the Bill, and particularly denies that the alleged inventions patented by said Letters Patent

in suit, are of great utility and of great value to the plaintiff and of great benefit to the public; denies that plaintiff and its predecessors have extensively sold and introduced into public use devices embodying the same, and denies that there has been a very large and rapidly increasing demand therefor.

9. Defendant denies that plaintiff and its predecessors have marked all devices embodying said alleged inventions in full compliance with the statutes of the United States, as alleged in the ninth paragraph of the Bill, and defendant further avers ad that it received no notice of the existence of the patents here in suit prior to the filing of the Bill.

10. Defendant denies each and every allegation in paragraph nine of the bill, and particularly denies that the public has generally acknowledged the validity of the said Letters Patent, or respected or recognized any rights of plaintiff therein and thereunder, and avers the contrary to be true and that said Letters Patent have been generally regarded as invalid and inoperative and without legal effect.

11. Defendant admits the allegations of paragraph ten of the Bill but avers that the facts alleged therein are irrelevant to the issues herein, and said allegations are misleading because they are incomplete in vital particulars, and different equities and issues of infringement were involved in said case of the Larkin Co.

12. Defendant admits that certain of the claims of the Gullborg patent No. 1,307,734, were sustained, with certain specific limitations and restrictions as to their scope, by the Circuit Court of Appeals for the Sixth Circuit in certain appeals which were pending before it, and that said Court of Appeals rendered an opinion. Defendant denies, however, that said Gullborg patent was either sustained in toto as apparently alleged by plaintiff in paragraph eleven of the Bill, or sustained broadly as apparently contended by plaintiff, and defendant avers on the contrary that some and particularly a certain one of the claims in issue of said Gullborg [fol. 100] patent were declared invalid by said Court of Appeals for the Sixth Circuit, and that the scope of the sustained claims was greatly narrowed and restricted by said Court.

13. Defendant denies that the validity or scope of the Gullborg patent No. 1,307,734, was adjudicated upon a full

and complete defense record by the U. S. District Courts in the cases cited in paragraph twelve of the Bill, as apparently alleged by plaintiff in said paragraph; denies that said cases cited were contested or fully defended upon a full and complete record, and denies that said cases involved equipment similar to anything sold by defendant, or the same issue of infringement as here:

14. Defendant denies each and every allegation of the thirteenth paragraph of the Bill and particularly denies that it has violated any right secured to plaintiff under said Letters Patent in suit, at any time or at any place, and denies having infringed said Letters Patent, denies any intention or threats of violation of any right of plaintiff under said Letters Patent, denies that plaintiff has been or will be damaged as alleged, and denies that defendant is about to obtain any profits accruing in equity to the plaintiff.

15. As an additional and separate defense in its behalf, defendant alleges that Arthur V. Gullborg and Oscar Zerk, were not the original, first and sole investors of the subject matter disclosed and claimed in said Letters Patent, but that they surreptitiously or unjustly obtained said Letters Patent, for that which was in fact invented by others, who were using reasonable diligence in adapting and perfecting the same, wherefore, said Letters Patent are void and are of no legal effect.

16. Defendant further avers that the subject matter disclosed and claimed in said Letters Patent to Gullborg, No. 1,307,734, or all material and substantial parts thereof, had been patented or described in printed publications long prior to the supposed invention or discovery by the said Arthur V. Gullborg, or for more than two years prior to his application for Letters Patent therefor, particularly in the specifications, drawings and claims of the following Letters Patent, and that therefore, said Letters Patent sued upon are null and void:

No.	8,251,	To	Richardson, July 29, 1851;
"	182,675,	"	Johnson, Sept. 26, 1876;
"	242,141,	"	Laskey, May 31, 1881;
"	242,564,	"	Sholder, June 7, 1881;
"	249,194,	"	Marks et al., Nov. 8, 1881;
"	456,295,	"	Stedman, July 21, 1891;

[fol. 101]

No. 610,359, To Lees, Sept. 6, 1898;
" 905,717, " Lang, Dec. 1, 1908;
" 919,743, " Mason, Apr. 27, 1909;
" 927,337, " Dupre, July 6, 1909;
" 937,682, " MacClyment, Oct. 19, 1909;
" 983,095, " Townsend, Jan. 31, 1911;
" 988,422, " Wilson, Apr. 4, 1911;
" 1,027,588, " Brown, May 28, 1912;
" 1,051,805, " Danberg, Jan. 28, 1913;
" 1,117,762, " Barcus, Nov. 17, 1914;
" 1,141,101, " Brown, June 1, 1915;
" 1,150,420, " Davis, Aug. 17, 1915;

Reissue

" 14,667, " Winkley, June 10, 1919.

British Patents

Thompson, No. 21,927, Apr. 24, 1897;
Hellman, " 15,757, Aug. 1, 1905;
Grey, " 18,727, of 1912;
Sharpe, " 26,134, Nov. 14, 1912;
Henshall, " 9,111, Apr. 9, 1914;
Alley, " 21,893, of 1906;
Seng, " 3,028, Feb. 24, 1915.

French Patents

Chandeur, No. 421,556, Feb. 25, 1911;
Seng, " 468,869, of 1914;
" Addition 20,083, of 1916.

17. Defendant further avers that the subject matter disclosed and claimed in said Letters Patent to Oscar Zerk, No. 1,475,980, or all material and substantial parts thereof, had been patented or described in printed publications long prior to the supposed invention or discovery by the said Oscar Zerk, or for more than two years prior to his application for Letters Patent therefor, particularly in the specifications, drawings and claims of the following Letters Patent, and that therefore, said Letters Patent sued upon are null and void:

No. 1,494,652, Wallace, May 20, 1924;
" 1,459,662, Manzel, June 19, 1923;
" 1,416,668, Abbott, May 23, 1904.
British patent to Clarkson No. 6,940 of 1904 White Motors Co. Cleveland, Ohio.

18. And as an additional and separate defense in its behalf, defendant alleges that said Arthur V. Gullborg [fol. 102] was not the original and first inventor or discoverer of any material and substantial parts of the things patented in said Letters Patent, but that the same, and all material and substantial parts thereof, were previously devised by the several applicants for the Letters patent identified in the next preceding paragraph herein, wherefore said letters patent are void and of no legal effect.

19. And as an additional and separate defense in its behalf, defendant alleges that the things patented in and by said Letters Patent were in public use and on sale in this country for more than two years before the application of Arthur V. Gullborg and Oscar Zerk, therefor, as prior to their alleged inventions thereof by the following named persons at the places indicated, to-wit:

Wilson Instrument and Specialty Company, Passaic, N. J.
Clarence Wilson, 21 W. 9th Street, N. Y., N. Y.
Albert K. Bush, 382 Paulison Ave. at Passaic, N. J.
William P. Welsh, 134 Center Street, Nutley, N. J.
Chester C. Henry, Summit, N. J.
O. K. Specialty Co., Newark, N. J.
John Swenson, 17 Madison Ave., Clifton, N. J.
Auto Car Co., Ardmore, Penna.
White Motor Co., Cleveland, Ohio.

wherefore, said Letters Patent are void and of no legal effect.

20. And as an additional and separate defense in its behalf, defendant alleges that the things patented in and by said Letters Patent, did not, at the date of said Letters Patent, constitute an invention patentable under the law, but were obvious aggregations of old and well known mechanical devices and expedients arranged for operation in an obvious and customary manner, and devoid of invention whereby Letters Patent are invalid and without legal effect.

21. And as an additional and separate defense in its behalf, defendant alleges, that alleged invention forming the subject matter of certain of the claims of the Gullborg patent No. 1,307,734, also forms the subject matter of certain of the claims of patent No. 1,307,733 granted to said Arthur V.

Gullborg, on June 24, 1919 and said certain claims of patent No. 1,307,734 are invalid and of no legal force and effect on the ground of double patenting.

22. Defendant further avers on information and belief [fol. 103] that the inventions of said Gullborg and Zerk patents were known to and used by other persons in this and foreign countries and patented and described in other Letters Patent for this and other countries, the prior uses and names of which persons and the numbers and dates of which Letters Patent are at present unknown to defendant and which when ascertained, defendant prays leave to insert by amendment in its answer.

23. Defendant, further answering, avers that the claims of the Letters Patent sued upon cannot be construed to cover or include anything ever made, sold or used by this defendant, and that they are invalid and ineffectual for such purpose, not only in view of the state of the prior art, but also because of the cancellations of the declarations amounting to disclaimers, and of the express limitations and restrictions, made or assented to by said patentees in their application for said Letters Patent, and moreover, made or assented to in consequence of repeated rejections and objections by the Patent Office which were acquiesced in by the applicants as a prerequisite to obtaining the allowance of their said Letters Patent as finally issued, all as disclosed by the file wrapper of said said Letters Patent, ready in Court to be produced.

24. Defendant further answering says that the device which have been sold by it, alleged to be infringements of the Gullborg and Zerk patents aforesaid, were sold for replacement and repair purposes as defendant had been advised that it had the lawful right to do, defendant having in no instance furnished the fixed nipples which are a permanent part of an automobile chassis, and that defendant has therefore not sold any of said articles for purposes of a complete, new installation.

All of which matters and things this defendant is ready and willing to aver, maintain and prove, as this Honorable Court shall direct, and therefore prays that the Bill of Complaint herein may be dismissed with its reasonable

cost, charges and disbursements in this behalf most wrongfully sustained, and to be taxed.

The Frank Miller Co., by F. J. Semple, President. Attest: A. T. Reed, Secretary. E. Hayward Fairbanks, 115 Westminster Ave., Merchantville, N. J., Solicitor for Defendant. Leonard L. Kalish, of Counsel for Defendant.

[fol. 104] State of New Jersey,
County of Camden, ss:

F. J. Semple, having been duly sworn according to law, deposes and says that he is the President of the Frank Miller Company, the defendant herein; that he has read the foregoing answer by him subscribed, and knows the contents thereof, and that the facts therein set forth are true to the best of his information and belief.

F. J. Semple.

Subscribed and sworn to before me, this 25th day of July, 1927.

Charles R. Ferris, Notary Public for New Jersey. (Seal.) My commission expires June 26, 1931.

I hereby certify that the foregoing is a true copy of the original on file in my office.

George T. Cranmer, Clerk, per L. M. Zarp, Deputy.

[fol. 105] United States District Court, District of New Jersey

In Equity

No. 2759

The Bassick Manufacturing Company, Plaintiff,

vs.

The Frank Miller Company, Defendant

Amendment to Answer—Filed Nov. 4, 1927

Now comes defendant by leave of Court obtained, and amends its Answer heretofore filed, as follows:

In the seventeenth paragraph on page 5 of the Answer, after the words "null and void:—" insert "No. 499,541, Pay et al., June 13, 1893."

Leonard L. Kalish, E. Hayward Fairbanks, Counsel for Defendant.

Plaintiff's counsel consents that the foregoing amendment may be entered with the same force and effect as if by leave of Court heretofore obtained.

Samuel H. Richards, French, Richards & Bradley, Counsel for Plaintiff.

Filed October 15, 1927.

[fol. 106] UNITED STATES DISTRICT COURT, DISTRICT OF NEW JERSEY

In Equity

No. 2759

THE BASSICK MANUFACTURING COMPANY, Plaintiff,

vs.

THE FRANK MILLER COMPANY, Defendant

AMENDMENT TO ANSWER—Filed Nov. 17, 1927

In paragraph 16 on page 5 of the Answer, at the end of the list of prior United States patents, insert:

No. 1,201,414	To Winkley	Oct. 17, 1916
" 1,307,733	" Gullborg	June 24, 1919

In the same paragraph and on the same page of the Answer, after the list of prior French patents, insert:

"Publication in the French journal Omnia, dated April 25, 1914, 9 Annee 434, page 258."

In paragraph 17 on page 5 of the Answer, add to the list of prior art United States patents the following:

No. 1,383,306	To Jacques	July 5, 1921
" 1,400,871	" Crotty	Dec. 20, 1921

In paragraph 21 on page 6 of the Answer, in line 3, cancel "of the" first occurrence; same line, after the word "claims" insert —14 and 15—.

In line 4 of the same paragraph, before "subject" insert —sole—; in the same line, cancel "of the".

In line 5 of the same paragraph, after "claims" insert —3, 4 and 5—.

On page 7 of the Answer, following paragraph 24, add the following paragraphs:

"25. As an additional and separate defense in its behalf, defendant alleges:

(a) That the only alleged novel element in claims 14 and 15 of the Gullborg Patent in suit, to wit, the 'grease cup is recited in said claims 14 and 15' in 'combination with' any grease pump, hose and coupler which may be connected to said grease cup;

[fol. 107] (b) That said 'grease cup' also forms the sole subject matter of claims 3, 4 and 5 of the Gullborg Patent No. 1,307,733;

(c) That said 'grease cups' have been and are sold outright by plaintiff as a separate article of manufacture under claims 3, 4 and 5 of the Gullborg Patent No. 1,307,733, and without any restrictions or conditions as to their use;

(d) That said 'grease cups' manufactured and sold outright by plaintiff under its Gullborg Patent No. 1,307,733 have but one purpose, to wit, to receive lubricant under pressure, and that in order to use said grease cups for this purpose it is necessary to connect a grease pump onto said grease cups by some coupling means for co-acting with the bayonet lugs or pins of said grease cups, all as clearly disclosed in the specification and drawings of said Patent No. 1,307,733;

(e) That the purchasers of said 'grease cups' under claims 3, 4 and 5 of Gullborg Patent No. 1,307,733 acquired from the plaintiff a constructive license to use said 'grease cups' in their naturally intended manner, to wit, by connecting a grease pump of some kind onto the 'grease cups' and forcing grease thereinto; and

(f) That, therefore, said claims 14 and 15 of Gullborg Patent No. 1,307,734 are invalid—

(1) Because they claim nothing more than the obviously intended use of the 'grease cups' sold by plaintiff under claims 3, 4 and 5 of Patent No. 1,307,733, and

(2) Because the subject matter of claims 14 and 15 of the patent in suit involves no invention over or distinct from the invention covered by claims 3, 4 and 5 of Gullborg Patent No. 1,307,733, and

(3) Because said claims 14 and 15 thus tend to deprive the outright purchasers of plaintiff's 'grease cups' and constructive licensees under claims 3, 4 and 5 of plaintiff's Gullborg Patent No. 1,307,733, of the obviously intended and sole use for which said 'grease cups' were sold.

23. As an additional and separate defense in its behalf, defendant alleges:

(a) That the 'grease cups' under plaintiff's Gullborg Patent No. 1,307,733 have been sold by plaintiff in very large quantities for about the past nine years, first, in the automotive industry and more recently in the industrial fields, under its trade-mark "Alemite";

(b) That the plaintiff has introduced its so-called 'Alemite grease cups' under its Gullborg Patent No. 1,307,733 and has flooded both the automotive and indus- [fol. 108] trial fields with the 'grease cups' largely to the exclusion of other competing grease cups for pressure lubrication;

(c) That the introduction of plaintiff's 'Alemite grease cups' under its Gullborg Patent No. 1,307,733 and its wide distribution in the automotive and industrial fields, to the exclusion of other competitive equipment, resulted primarily from certain market conditions prevalent at the time of its introduction, as well as from a gigantic national advertising program initiated and fostered by the plaintiff on behalf of its said product and also as a result of tremendous sales effort and pressure, and the acquiring by plaintiff of the successful competing companies;

(d) That said 'Alemite grease cups' under Gullborg Patent No. 1,307,733 have been sold by plaintiff not only outright and without any conditions or limitations whatsoever, but have been sold to the public at large for about the past nine years without any actual notice to the purchasers

or public of any broad monopoly solely of the 'use' of said 'grease cups' as is now apparently contended for by plaintiffs under claims 14 and 15 of the Gullborg Patent No. 1,307,734 in suit;

(e) That said 'grease cups' under Gullborg Patent No. 1,307,733 were not bought by the public from the plaintiff, with any understanding that they could not be used in any way whatsoever except by employing a grease pump, hose and coupler prescribed by plaintiff under claims 14 and 15 of the Gullborg Patent in suit;

(f) That said 'Alemite grease cups' under Gullborg Patent No. 1,307,733, which were bought outright as a separate article of manufacture, by a public unsuspecting of a monopoly solely of the use of the 'grease cups' under claims 14 and 15 of the Gullborg Patent in suit, now constitute a very large majority — 'lubricant receptacles' in the automotive and industrial fields;

(g) That since said 'Alemite grease cups' under Gullborg Patent No. 1,307,733 comprise a very large majority of the 'lubricant receptacles' in the automotive and industrial fields, therefore, an exclusive monopoly at this late date, solely of the 'use' of said grease cups under claims 14 and 15 of the Gullborg Patent in suit, or an exclusive monopoly of all lubricant dispensing pumps of any old construction and any description whatsoever, for putting grease into these 'grease cups', would be paramount to and co-extensive with a monopoly of grease consumed through these grease cups and would, in addition, constitute a con- [fol. 109] trolling influence over the many millions of outright purchasers and users of these 'grease cups';

(h) That such grease monopoly and controlling influence in the automotive and industrial fields

(1) is unjustifiable either in law or in equity by any patent rights upon a mere and relatively trifling mechanical improvement;

(2) is contrary to public interest and policy, and

(3) plaintiff should be estopped at this late date from asserting such broad monopoly under claims 14 and 15."

Leonard L. Kalish, E. Haywood Fairbanks, Counsel for Defendant.

Plaintiff's counsel consents that the foregoing amendment may be entered with the same force and effect as if by leave of Court heretofore obtained.

Samuel H. Richards, French, Richards & Bradley,
Counsel for Plaintiff.

I hereby certify that the foregoing is a true copy of the original on file in my office.

George T. Cranmer, Clerk, per L. M. Zarp, Deputy.

[fol. 110] UNITED STATES DISTRICT COURT, DISTRICT OF NEW JERSEY

In Equity

THE BASSICK MANUFACTURING COMPANY, Plaintiff,

vs.

THE FRANK MILLER COMPANY, Defendant

MOTION FOR PRELIMINARY INJUNCTION—Filed Aug. 16, 1927

Now comes The Bassick Manufacturing Company, the plaintiff herein, by its solicitors and counsel, and moves for an order directing the issuance of a preliminary injunction enjoining and restraining the defendant herein, its officers, agents, employes, associates and confederates from making, using or selling the lubricating apparatus complained of, particularly the compressors and couplers referred to in the advertising matter of The Frank Miller Company, a photostat copy of which is attached hereto as Exhibit A, or any other device embodying the inventions described and claimed in claims 1, 2, 14 and 15 of Gullborg patent No. 1,307,734 and/or claims 2, 3 and 5 of Zerk patent No. 1,475,980, or any of the parts thereof in direct or contributory infringement of the said claims of the said patents, either for original equipment or for replacement under the guise of "repairs" or otherwise, and from offering or advertising so to do and from aiding or abetting or in any way contributing to the infringement of the said claims of the said patents or either of them.

French Richards & Bradley, Samuel H. Richards,
Williams Bradbury McCaleb & Hinkle, Solicitors
and Counsel for The Bassick Manufacturing Co.

(Here follow photolithographs, side folios 111-114.)

Plaintiff's Exhibit "A"

Accompanying Motion for Preliminary Injunction

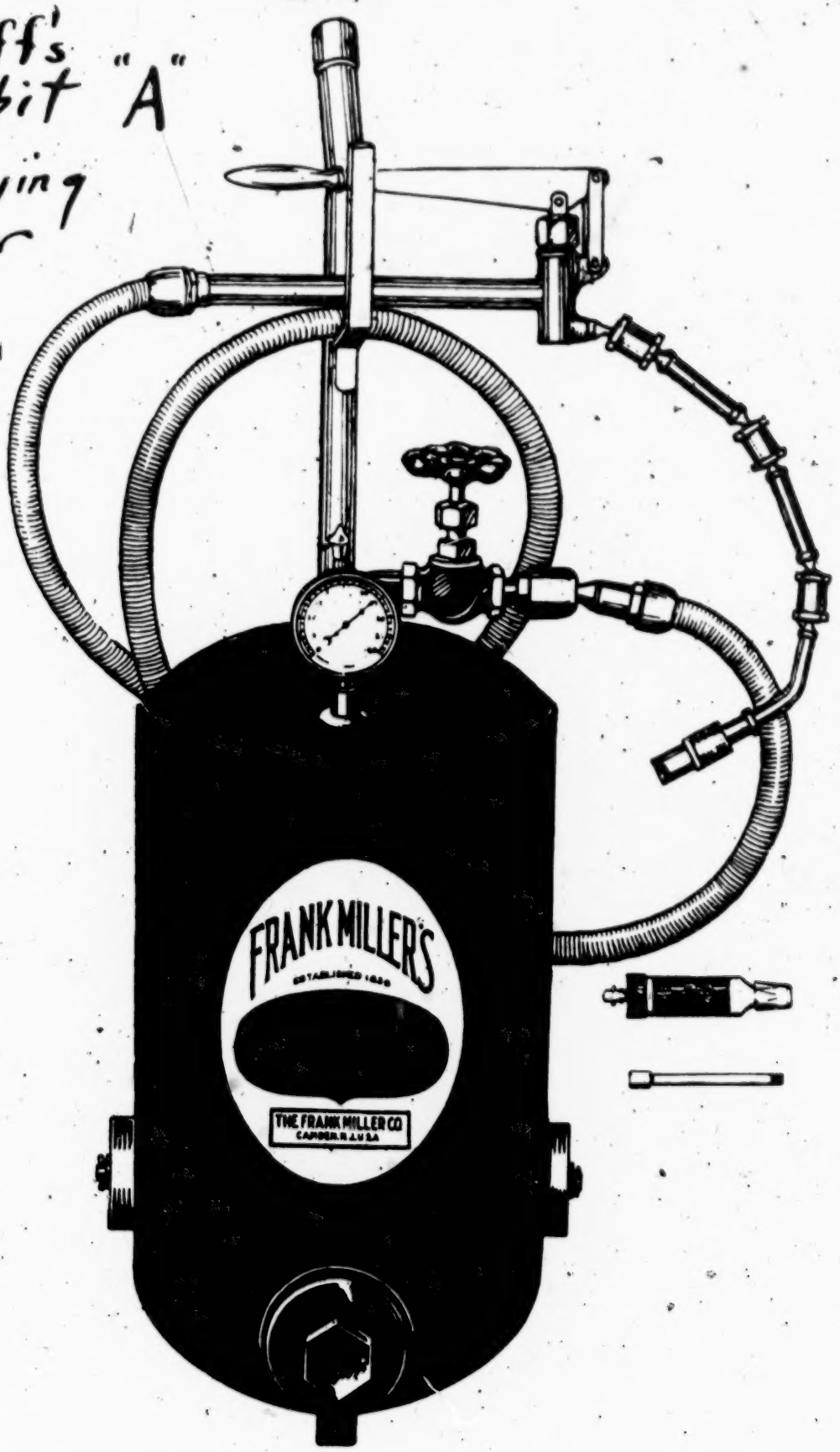

Defendant's Exhibit No. 36
Semple Affiduvit

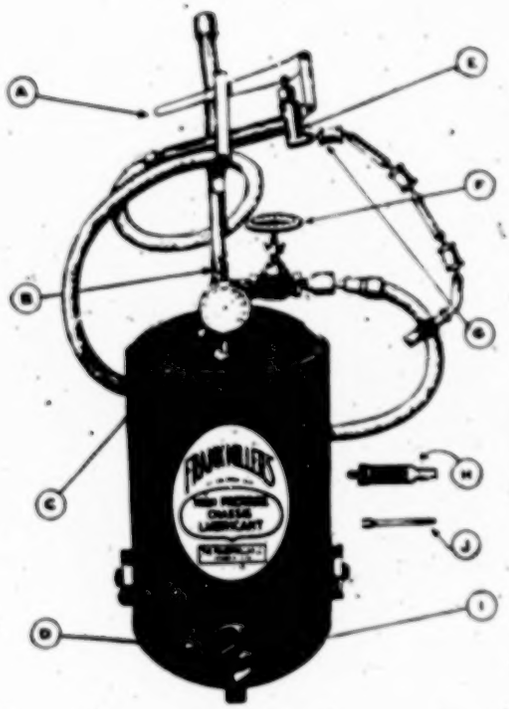

FRANK MILLER
High Pressure Chassis Lubricator

FOR LUBRICATING CARS EQUIPPED WITH ALEMITE, ZERK OR DOT SYSTEMS

The FRANK MILLER High Pressure Chassis Lubricator is the highest development in lubricating systems yet brought forth. It will last indefinitely if used with reasonable care. It is a mechanical device, well-made of the best materials, and perfectly put together and finished. It is designed to give the highest mechanical service, but no mechanical device, however sturdy, will stand unwarranted abuse.

DIRECTIONS FOR USE

NOTE: When shipped, ***FRANK MILLER*** Lubricators contain 30 lbs. ***FRANK MILLER'S*** High Pressure Lubricant, and it is only necessary to obtain air pressure from 80 to 100 lbs. in order to use it.

TO RE-FILL LUBRICATOR

1. Release air pressure on tank by removing cap on air valve "B" and holding plunger down until gauge "C" shows that air in tank has been exhausted.
2. Lay Lubricator on floor with plug "I" up and remove plug.
3. Fill Lubricator about two-thirds full and replace plug. The special metallic gasket with which plug is equipped, eliminates the necessity of taking up on the plug tighter than can conveniently be done with a 14" wrench.
4. Stand Lubricator upright, making sure that valve "F" which controls flow of grease through hose is closed.
5. Remove cap on air valve "B" and attach power or hand air pump. Gauge on tank should show 80 to 100 lbs. air pressure. Remove hose from air valve and replace cap.
6. When Lubricator is not in use, valve "F" should be closed and handle "A" on Booster should be down. This precaution will prevent loss of grease.
7. Do not attempt to remove plug "I" unless air has been exhausted from tank.

TO LUBRICATE ALEMITE EQUIPPED CARS

Move Lubricator to side of car and open valve "F". Wipe Alemite nipple so that it is free from dirt or grit. Attach coupling "G" on end of Ball Jointed hose to Alemite fitting. With coupling attached to fitting, operate Booster as a pump, which develops 8,000 to 10,000 lbs. pressure.

If pressure developed by Booster does not force grease into bearings, remove coupling and see if ball in end of Alemite fitting is free. If it is stuck, tap ball lightly until free.

If it is then found impossible to force grease into bearings, remove Alemite nipple and clean it out. In many cases where the fitting is not wiped off thoroughly before lubrication is started, dirt and grit is forced into the nipple, clogging up the small hole and making it impossible to force grease into bearing.

If, after these remedies are tried, it is found impossible to force grease into the bearing, in order to be sure of proper lubrication, bearing should be loosened or taken apart and cleaned, as it has probably become frozen.

TO LUBRICATE ZERK EQUIPPED CARS

Remove Ball Jointed Hose from Booster and replace with Zerk Adapter "J". For best results, hold Booster in left hand and force Adapter against Zerk fitting on car, keeping the Booster as near as possible in line with the fitting. Operate Booster as explained above.

TO LUBRICATE DOT EQUIPPED CARS

Attach Dot Adapter "H" to fitting on car. Attach Ball Jointed hose to Alemite fitting on the end of the Dot Adapter, and operate the Booster as a pump.

The Dot Adapter must be held tightly screwed to the fitting on the car, to prevent force of grease unscrewing Adapter.

PRINTED IN U. S. A.

Defendant's 113 Exhibit No. 36
Semple Affidavit

FRANK MILLER PRODUCTS

FRANK MILLER
Gear Case Cleaner

USE of the **Frank Miller Gear Case Cleaner** makes the removal of worn out grease from gear cases a cleaner, quicker and simpler operation.

IT is especially convenient for removing worn grease from the differential housings of Fords, Chevrolets, Dodges and other cars which have an opening for filling in the side of the housing. The nozzle will reach the bottom of the gear case.

IT is superior to cleaners of the "squirt-gun" type as it operates on the "pump" principle so that the nozzle need not be withdrawn until grease has all been removed.

USE of the **Frank Miller Gear Case Cleaner** by Dealers will enable them to sell more grease—enough to replace the worn out grease instead of only a half pound or pound to fill the housing.

—SPECIFICATIONS—

BARREL: 11½ inches long, 1½ inch diameter, 20 gauge, baked enamel.
PISTON ROD: 13 inches long, ⅜ inch diameter.
CAP: Machined
HANDLE: Hardwood stained.
SUCTION NOZZLE: Steel ½ in. diameter.
DISCHARGE NOZZLE: Steel ½ inch diameter

Packed 1 to a corrugated case.

114

Defendant's Exhibit No. 36
Semple Affidavit

FRANK MILLER PRODUCTS

FRANK MILLER'S
High Pressure Lubricator

The Frank Miller High Pressure Lubricator consists of a welded, steel tank 10 inches in diameter and 22 inches in height, which, when shipped, contains 30 lbs. of Frank Miller High Pressure Chassis Lubricant. The tank is mounted on two wheels, equipped with a handle which extends 36 inches from the floor, by means of which it may be easily moved from one greasing job to another. It will stand 100 pounds pressure.

The Lubricator is equipped with 8 feet of hose, on the tank end of which there is a brass shut-off valve to control the flow of grease. To the other end of the hose is attached a High Pressure Booster of an easily operated design, by means of which the grease, forced to the end of the hose by air pressure, may be injected into high pressure lubrication connections at a pressure as high as 5000 pounds. The Booster is equipped with an attachment for use in lubricating cars equipped with the Alemite System as well as an attachment for use on cars equipped with the Zerk or Dot Systems. By detaching the short metallic hose, gear cases also may be filled.

Re-Filling Pump

There is a needle air valve with a standard tire valve thread so that air pressure in tank may be obtained with a power tire pump or a hand, auto tire pump. There is a pressure gauge to show pressure in tank which should be from 80 to 100 pounds.

Pumps, like that illustrated, are furnished dealers at small cost for use in refilling the Frank Miller High Pressure Lubricator.

FILED
Jul 5 1927
MAR 27 1928
AT 9 O'CLOCK A. M.
GEORGE D CRANMER, Clerk

BEST SINCE 1838

[fol. 115] UNITED STATES DISTRICT COURT, DISTRICT OF NEW JERSEY.

In Equity

THE BASSICK MANUFACTURING COMPANY, Plaintiff,

vs.

THE FRANK MILLER COMPANY, Defendant

AFFIDAVIT OF J. E. OTIS, JR.

STATE OF ILLINOIS,
County of Cook, ss:

J. E. OTIS, JR., being duly sworn, deposes and says:

I am the J. E. Otis, Jr., Vice President and General Manager of The Bassick Manufacturing Company, who signed an affidavit of even date for use in this cause in support of a motion for a prelininary injunction against the defendant. I am familiar with the activities of concerns competing with The Bassick Manufacturing Company in the manufacture and sale of high pressure lubricating equipment, including The Frank Miller Company the defendant in the above entitled cause.

I have obtained and submit herewith as Exhibit M a specimen of the equipment charged to be an infringement in this suit.

I submit herewith as Exhibit N an Alemite-Zerk adapter intended for use in lubricating machines equipped with Alemite-Zerk fittings of The Bassick Manufacturing Company.

I submit herewith as Exhibit O an assortment of Alemite-Zerk fitting such as extensively manufactured and sold by The Bassick Manufacturing Company, the same being applied to the bearings in the manner described in Zerk patent No. 1,475,980.

(Sgd.) J. E. Otis, Jr.

Subscribed and sworn to before me this 29th day of July, 1927.

(Sgd.) Frieda A. Neuffer, Notary Public. (Seal.)

[fol. 116] UNITED STATES DISTRICT COURT, DISTRICT OF NEW JERSEY

In Equity

THE BASSICK MANUFACTURING COMPANY, Plaintiff,

vs.

THE FRANK MILLER COMPANY, Defendant

ORDER TO SHOW CAUSE WHY A PRELIMINARY INJUNCTION SHOULD NOT ISSUE—Filed Aug. 16, 1927

This cause having come on to be heard on motion of solicitors and counsel for the plaintiff, The Bassick Manufacturing Company, for an order to show couse why a preliminary injunction should not issue, and upon reading the plaintiff's bill of complaint and motion for preliminary injunction and the affidavits filed in support thereof,

It is ordered, that the above named defendant, The Frank Miller Company, show cause if any it has before this court in the City of Trenton, N. J., on the 11th day of October, 1927 at ten o'clock A. M., or as soon thereafter as counsel can be heard, why a preliminary injunction should not issue pursuant to the bill of complaint and the motion for a preliminary injunction herein; and

It is further ordered, that the defendant, The Frank Miller Company, have until and including the 16th day of September, 1927, to file and serve upon the plaintiff's solicitors affidavits, papers and exhibits, if any, to be used at the hearing upon the said motion for a preliminary injunction; and

That the plaintiff have until the 6th day of October 1927, for serving and filing reply affidavits.

(Sgd.) J. L. Bodine, United States District Judge.

[fol. 117] UNITED STATES DISTRICT COURT, DISTRICT OF NEW JERSEY

In Equity

No. 2759

THE BASSICK MANUFACTURING COMPANY, Plaintiff,

vs.

THE FRANK MILLER COMPANY, Defendant

EXCERPTS FROM TRANSCRIPT OF HEARING BEFORE HON. JOSEPH L. BODINE, AT TRENTON, N. J., NOVEMBER 29, 1927

Page 49

The Court: Let me ask you another question. How different would this record be on final hearing from what it is on application for preliminary injunction?

Mr. Kalish: I would say so far as claims 14 and 15 of the Gullborg patent are concerned the record would be no different.

The Court: How about claims 2, 3 and 5 of the Zerk patent?

Mr. Kalish: With regards to claims 2, 3 and 5 the only difference to be made in the record, and that is only if there is a dispute on the point, is some expert testimony as to the mechanics involved in the prior art, and I thing that we could pretty nearly stipulate as to claims 2, 3 and 5 of Zerk.

Mr. Philbin: The plaintiff would have no expert witnesses with respect to the claims of the Zerk patent, nor the claims of the Gullborg patent here in suit.

Mr. Kalish: We do not have in mind the Zerk and Gullborg claims, but we do have in mind particularly the claims of the prior art, which I have mounted on that large sheet (indicating), and it is merely a question whether the court feels sufficiently familiar with

Page 50

mechanics to take its own views, or whether the court wishes to listen to a mechanical expert.

[fol. 118] The Court: I do not care much for expert testimony, except in the radio art.

Page 52

The Court: * * * I was going to suggest that since there is no actual injury occurring to these patent rights at the moment that it might be just as well to treat the case as on final hearing as soon as Mr. Philbin's affidavits are filed, and file briefs so that the case may be decided affirmatively and authoritatively in this district and you may go as rapidly as you desire, whoever may lose, to the Circuit Court of Appeals.

Mr. Busser: I will be very glad to do that. We want to get to the Court of Appeals, but not with pro-formal decision.

Page 53

The Court: I do not give pro-formal decisions. People may not like my decisions, but I do not give pro-formal decisions.

Page 79

Mr. Kalish: I understood that your Honor was to consider this as a final hearing. Am I correct in that understanding?

The Court: I think I did make some suggestion that if the record was the same on this application I saw no reason when it came to filing briefs in the matter the case should not be dealt with as though it were on final hearing.

Mr. Kalish: We all agree to that.

Mr. Philbin: Yes, your Honor.

I hereby certify that the foregoing is a true copy of the original on file in my office.

George T. Cranmer, Clerk, per L. M. Zarp, Deputy.

[fol. 119] UNITED STATES DISTRICT COURT, DISTRICT OF NEW JERSEY

In Equity

No. 2759

THE BASSICK MANUFACTURING CO., Plaintiff,

vs.

THE FRANK MILLER COMPANY, Defendant

NOTICE—Filed Feb. 24, 1928

Messrs. Wiedersheim & Fairbanks,
DeLong Building, Philadelphia, Pa.

GENTLEMEN:

Please take notice that on Tuesday, February 28, 1928, at 9:30 o'clock A. M., or as soon thereafter as counsel can be heard, we shall present to his Honor, Judge Joseph A. Bodine, sitting in the Federal Building at Trenton, New Jersey, plaintiff's Motion to Dismiss the above entitled cause.

A copy of the said Motion and the Affidavits therein referred to is handed to you herewith.

(Sgd.) Lynn A. Williams. (Sgd.) Williams, Bradbury, McCaleb & Hinkle, Solicitors and Counsel for Plaintiff.

Receipt of the foregoing notice acknowledged this day of February, A. D. 1928.

—— ——, Solicitors and Counsel for Defendant.

[fol. 120] UNITED STATES DISTRICT COURT, DISTRICT OF NEW JERSEY

In Equity

No. 2759

THE BASSICK MANUFACTURING CO., Plaintiff,

vs.

THE FRANK MILLER COMPANY, Defendant

MOTION—Filed Feb. 24, 1928

Now comes the plaintiff, by its solicitors and counsel, and moves that the above entitled cause be dismissed without prejudice, with costs to the defendant.

This motion is based upon the record and proceedings herein, upon the accompanying affidavits of Elwood Hansmann and J. E. Otis, Jr., and the exhibits submitted therewith.

(Sgd.) French, Richards & Bradley. (Sgd.) Williams, Bradbury, McCaleb & Hinkle, Solicitors and Counsel for Plaintiff.

[fol. 121] UNITED STATES DISTRICT COURT, DISTRICT OF NEW JERSEY

In Equity

No. 2759

THE BASSICK MANUFACTURING CO., Plaintiff,

vs.

THE FRANK MILLER COMPANY, Defendant

AFFIDAVIT OF J. E. OTIS, JR.

STATE OF ILLINOIS,
County of Cook, ss:

J. E. Otis, Jr., being first duly sworn deposes and says:

I am a resident of Chicago, Illinois, and am a vice-president and the active chief executive officer of The Bassick Manufacturing Company, the plaintiff in the above entitled suit. I keep myself informed of the status of the various patent infringement suits brought by my company and am familiar with the record and proceedings herein.

I am aware the The Bassick Manufacturing Company has brought a suit in the United States District Court, for the Western District of Tennessee, Western Division, against The R. M. Hollingshead Company of Camden, New Jersey, but having a regular and established place of business at Memphis, Tennessee, for infringement of Gullborg patent 1,307,734 and Zerk patent 1,475,980 upon which the present case against The Frank Miller Co. is based. I am aware that in the Hollingshead suit a preliminary injunction order was entered on March 21, 1927, and modified on April 20, 1927, to the extent that claim 12 was struck out of the order for preliminary injunction, as set forth in the affidavit of Elwood Hansmann.

I am making this affidavit in support of plaintiff's motion to dismiss the suit against The Frank Miller Co. without prejudice and with costs to the defendant.

On Thursday, February 9, 1928, I received a visit from Mr. R. M. Bagley, vice-president of The R. M. Hollingshead Company, Camden, N. J., and during my interview with him we discussed the suit which The Bassick Manufacturing Company brought against The R. M. Hollings-
[fol. 122] head Company. Mr. Bagley informed me that The Frank Miller Co. of Camden, N. J., was and is a subsidiary of The R. M. Hollingshead Company, it having been purchased by the Hollingshead Company a few years ago for the purpose of selling the jobbing trade under a different brand the same products which the Hollingshead Company sells to the dealers direct. My interview on February 9 with Mr. Bagley was the first intimation that I had received that The R. M. Hollingshead Company owned or controlled The Frank Miller Company, which The Bassick Manufacturing Company had sued for patent infringement in a case involving substantially identically the same lubricating equipment as was enjoined by the United States District Court in the suit brought against the R. M. Hollingshead Company, as shown by the exhibits submitted with the affidavit of Elwood Hansmann, which I have read.

Subsequent information received by me confirms Mr. Bagley's statement that The R. M. Hollingshead Company owns and controls The Frank Miller Co., and that four of the five directors of The R. M. Hollingshead Company, viz., R. M. Hollingshead, R. M. Bagley, C. W. Tomlinson and R. M. Hollingshead Jr., comprise four of the six directors of The Frank Miller Co.

A financial report just received by me from a commercial agency states that "The company is controlled by The R. M. Hollingshead Company and it occupies a portion of the building of The R. M. Hollingshead Company." The report also states that "It is reported the company has done a good trade, has a warehouse in San Francisco which is also occupied by The R. M. Hollingshead Company, who is said to take the output of the company," and also that F. J. Semple, president of The Frank Miller Co. was formerly vice president of The R. M. Hollingshead Company.

The attorneys for The Bassick Manufacturing Company have taken steps to procure certified copies of the articles of incorporation of The R. M. Hollingshead Company and The Frank Miller Co. and copies of the annual reports of these concerns showing these facts, and these certified copies will be submitted with this affidavit or filed in court when received from the Secretary of State of New Jersey.

(Sgd.) J. E. Otis, Jr.

Subscribed and sworn to before me this 22nd day of February, 1928.

(Sgd.) Szada Goldberg, Notary Public. (Seal.)

[fol. 123] UNITED STATES DISTRICT COURT, DISTRICT OF NEW JERSEY

In Equity

No. 2759

THE BASSICK MANUFACTURING CO., Plaintiff,

vs.

THE FRANK MILLER COMPANY, Defendant

AFFIDAVIT OF ELWOOD HANSMANN

STATE OF ILLINOIS,
County of Cook, ss:

Elwood Hansmann, being first duly sworn, deposes and says:

I am a resident of Chicago, Illinois, and am associated with Williams, Bradbury, McCaleb & Hinkle, solicitors and

counsel for The Bassick Manufacturing Company in the above entitled cause. I am familiar with the record and proceedings herein and with the record and proceedings in a suit pending in the United States District Court for the Western District of Tennessee, Western Division, entitled The Bassick Manufacturing Company vs. The R. M. Hollingshead Company, Equity No. 935. I am making this affidavit in support of plaintiff's motion to dismiss.

The Bassick Manufacturing Company on or about August 17, 1926, filed a Bill of Complaint against The R. M. Hollingshead Company, charging infringement of Gullborg patent No. 1,307,734 involved herein. Thereafter, to-wit on October 30, 1926, the plaintiff filed an amended Bill of Complaint against the defendant based upon Gullborg patent No. 1,307,734 and Zerk patent No. 1,475,980, also involved in this cause. Thereafter the defendant filed its answer to the amended Bill of Complaint. Plaintiff presented its Motion for a Preliminary Injunction to restrain the defendant from infringing on the said patents. This Motion coming on to be heard before the Honorable H. B. Anderson, District Judge, upon the affidavits of D. A. Beezley, O. A. Cumming, and Ernest W. Davis, identifying the devices complained of as having been sold by the defendant; and the matter having been argued by counsel for the respective parties, and the Court being advised in the [fol. 124] premises, an order for a Preliminary Injunction was entered on March 21, 1927 against The R. M. Hollingshead Company, restraining "the defendant, its officers, agents and employees, pending this suit, from making, using or selling any of the forms or parts of lubricating apparatus referred to in the said affidavits as having been sold by the defendant."

A certified copy of the amended Bill of Complaint, Answer to amended Bill of Complaint, affidavits of D. A. Beezley, O. A. Cumming and Ernest W. Davis, and the Order for Preliminary Injunction is submitted herewith. The said Order for Preliminary Injunction was based upon claims 1, 2, 3, 4, 5, 6, 8, 12, 14 and 15 of the said Gullborg patent No, 1,307,734, and claims 2, 3 and 5 of the said Zerk patent No. 1,475,980.

Thereafter, to wit on April 20, 1927, an "Order Modifying Preliminary Injunction" was entered by his Honor, Judge H. B. Anderson, striking out of the order for Pre-

liminary Injunction claim 12 of the Gullborg patent, the said claim having been held to be invalid by the Circuit Court of Appeals for the Sixth Circuit in an opinion rendered on March 23, 1927, as will more fully appear from the copy of the said opinion on file herein. Otherwise the said Preliminary Injunction Order of March 21, 1927, is in full force and effect and has not been modified. A certified copy of the said Order of modification is submitted herewith.

I submit herewith a drawing which I believe is a true and correct drawing of the pin type coupler submitted with the defendant's lubricant compressor as Exhibit "M" of the affidavit of J. E. Otis, Jr., dated July 29, 1927, and filed herein.

I am aware that defendant has filed an "Expert Affidavit of Hugo C. Gibson Contra Motion for Preliminary Injunction," in which he submits with page 29 of his affidavit a drawing of "Defendant's coupler in suit" which is somewhat at variance with the drawing submitted by me. I note, however, that the drawing submitted by Mr. Gibson illustrates a construction substantially identical to that shown in Exhibit "K" of the Affidavit of Ernest W. Davis illustrating one of the defendant's constructions enjoined in the aforesaid suit against The R. M. Hollingshead Company.

I observe that in the aforesaid suit against The R. M. Hollingshead Company, Affidavits of R. M. Hollingshead and R. M. Bagley were filed in behalf of the defendant. I am informed and believe that these gentlemen are directors of The Frank Miller Company, the defendant herein. I [fols. 125 & 126] am also aware that the law firm of Wiedersheim & Fairbanks, DeLong Building, Philadelphia, represents The R. M. Hollingshead Company and The Frank Miller Company in the suits brought by The Bassick Manufacturing Company.

(Sgd.) Elwood Hansmann.

Subscribed and sworn to before me this 22nd day of February, 1928.

(Sgd.) Szada Goldberg, Notary Public. (Seal.)

(Here follows drawing, side folios 127 and 128.)

Drawing Accompanying
Affidavit of Elwood Hansmann

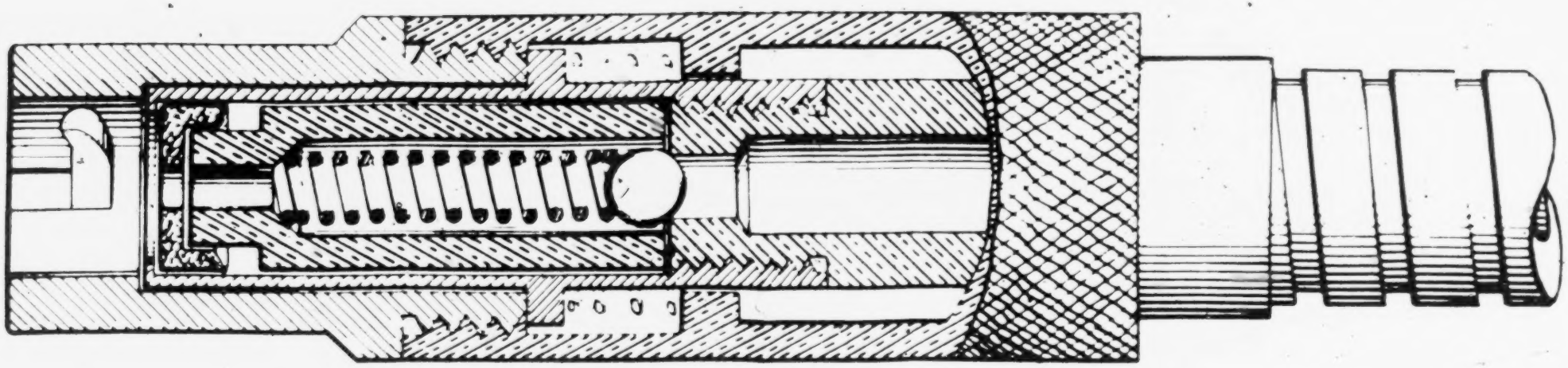

127

I hereby certify that the foregoing is a true copy of the original on file in my office.

George T. Cranmer, Clerk, per L. M. Zarp, Deputy.

[fol. 129] UNITED STATES DISTRICT COURT, DISTRICT OF NEW JERSEY

In Equity

No. 2759

THE BASSICK MANUFACTURING CO., Plaintiff,

vs.

THE FRANK MILLER COMPANY, Defendant

ORDER—Filed March 21, 1928

This cause having come on to be heard before the Court upon plaintiff's motion to dismiss, the same having been argued by counsel, and the Court being fully advised in the premises, it is

Ordered, that the above entitled cause be dismissed, with the taxable costs to the defendant to be taxed by the clerk.

J. L. Bodin, United States District Judge.

I hereby certify that the foregoing is a true copy of the original on file in my office.

George T. Cranmer, Clerk, per L. M. Zarp, Deputy.

[fol. 130] IN UNITED STATES DISTRICT COURT

PLAINTIFF'S EXHIBIT 8

STIPULATION AS TO TESTIMONY OF J. E. OTIS, JR.—Filed June 23, 1928

It is stipulated by and between solicitors and counsel for the respective parties in the above-entitled cause that if J. E. Otis, Jr., were called as a witness on behalf of the plaintiff, he would testify as follows:

I am a vice-president and general manager of The Bassick Manufacturing Company, of Chicago, Illinois, the plaintiff in the above-entitled suit. As the chief executive officer of The Bassick Manufacturing Company, I have become familiar with its business, its product and its patents and with the art to which they relate.

The Alemite Lubricating System as Manufactured and Sold by The Bassick Manufacturing Company

Since 1919, The Bassick Manufacturing Company has been manufacturing and selling a high pressure lubricating system embodying the inventions disclosed in Winkley reissue patent No. 14,667 and in Gullborg United States patents Nos. 1,307,733 and 1,307,734. It has always been sold under the registered trademark "Alemite". Each installation of this lubricating system comprises a plurality of nipples or so-called pin fittings, each adapted to be screwed into a hole or conduit leading to the bearing of an automobile or other mechanism to be lubricated; also a single high pressure lubricant compressor having a discharge conduit connected at one end with the compressor and provided at its free end with a coupling member. The coupling member and the pin fittings have been provided with coacting means whereby the coupling member of the compressor can be successively attached to the various pin fittings associated with the various bearings of the automobile or other mechanism to be lubricated. The coupling or attaching means has been adapted in accordance with Gullborg patent No. 1,307,734 to permit of quick and easy attachment and detachment between the coupling member and the pin fittings and the parts have been so equipped and related as to effect a lubricant sealing relation between the coupling member and the pin fittings in such manner as to prevent the leakage of grease or lubricant at the point of junction between the coupling member and the pin fitting, this sealing means comprising a spring-pressed leather-faced plunger adapted under the pressure of the spring [fol. 131] to effect an initial seal between the coupling member and the head of the pin fitting, the plunger being subjected to the pressure of lubricant when developed in the compressor in such manner as to tighten the sealed joint between the coupling member and the head of the pin fitting correspondingly with the degree of pressure developed within the compressor so as to prevent effectually the leakage of grease or lubricant no matter how high a degree of pressure might be developed in the compressor.

Upon the attachment of the coupling member to the pin fitting, the leather-faced plunger of the coupling member is moved inwardly within the bore of the coupling member and against the compression of the spring above referred

to, with the result that the spring has served in a measure to lock the coupling member to the pin fitting through the agency of the pins extending from diametrically opposite sides of the pin fitting and the bayonet slots with which the shell of the coupling member has been provided.

Upon the detachment of the coupling member from the pin fitting the spring causes the plunger to move outwardly to its normal position where it rests against a shoulder in the bore of the shell of the coupling member. This slight outward movement of the plunger at the moment of detaching the coupling member from the co-operating pin fitting has caused an excess of lubricant which would otherwise be extruded to be drawn back into the coupling member through the aperture in the plunger, thereby preventing the extrusion of grease. If it were not for this action of the apertured plunger and its associated spring, a small quantity of grease would be left outside of the aperture of the plunger upon each detachment of the coupling member from a pin fitting to which it had supplied lubricant under pressure, and after a few detachments of the coupling member to and from a succession of pin fittings, there would be an accumulation of grease in and about the coupling member which would soil the hands of a person eng-ged in applying lubricant to the several bearings of an automobile or other machine.

Without attempting to describe in detail the construction of the lubricating equipment thus manufactured and sold by The Bassick Manufacturing Company, and without attempting to enumerate all of the advantages of this construction and equipment, I will say that the system and equipment as above described and conforming substantially with the disclosures of the said Gullborg patent was first [fol. 132] put on the market by a predecessor of The Bassick Manufacturing Company, namely, The Alemite Die Casting & Manufacturing Company, of Chicago, in 1918. It immediately found great favor among automobile owners and users and among manufacturers of automobiles. From that time to this, approximately thirteen million automobiles have been equipped with this system and means of lubrication.

The pin fittings referred to have been made in various forms, but always with identically the same tubular member, the same pin, the same ball valve and the same valve

actuating spring located between the pin and the ball valve. The form of the pin fittings has differed in order to enable them to be screwed into the holes or conduits leading to the variously located bearings of an automobile or other machine and so as to bring the characteristic components of the pin fitting as above enumerated into a position and angle such as to facilitate the easy attachment and detachment of the co-operating coupling member. Thus, the pin fittings have been made in the form of "straights" and in the form of elbows, some of them 90° elbows, some of them 25° elbows, some of them 65° elbows, etc. These various forms of pin fittings have been provided with various threads for screwing them into holes or conduits provided with differing threads, as for example, ⅛" pipe thread, ¼" pipe thread, etc.

The Alemite-Zerk Lubricating System as Manufactured and Sold by The Bassick Manufacturing Company

In April, 1924, The Bassick Manufacturing Company purchased the lubricating apparatus business of the Allyne-Zerk Company of Cleveland, Ohio, and has since continued the manufacture and sale of equipment under Zerk patent No. 1,475,980, of December 4, 1923. This equipment has been marketed under the name "Alemite-Zerk", each installation comprising a plurality of fittings, each adapted to be screwed into a bearing, and a compressor and coupler adapted for use in conjunction therewith. The Zerk construction does away with the necessity of providing dust caps, the compressors may be handled in one hand, and there is a metal to metal contact provided between the feeding nozzle element and the lubricant receptacle element, preventing the escape of lubricant while it is being applied to the bearing under high pressure.

[fol. 133] The Great Commercial Success of the Plaintiff's Lubricating Equipment.

Since 1919 The Bassick Manufacturing Company has sold approximately 349,000,000 pin fittings forming parts of the "Alemite" high pressure lubricating system. The business of The Bassick Manufacturing Company has been rapidly expanding and increasing so that during the month of February, 1928, it shipped approximately 5,600,000 of these pin fittings, of which by far the larger percentage

were straight fittings and a smaller percentage were fittings of the elbow type.

Likewise, the sales of the Alemite-Zerk high pressure lubricating system and its component parts has grown tremendously and since January 1, 1925, the Bassick Manufacturing Company has sold approximately 100,000,000 nipples forming parts of this Alemite-Zerk system. In the month of February, 1928, it shipped approximately 6,400,000 Alemite-Zerk fittings, of which 4,600,000 were straight fittings and 1,800,000 were fittings of the elbow type.

The Bassick Company's sales of Alemite equipment have been as follows:

Sales of Alemite Pin Fittings

1919	5,737,055
1920	16,750,611
1921	14,780,470
1922	31,444,216
1923	43,520,864
1924	33,000,000
1925	51,873,288
1926	50,636,983
1927	56,849,108

Sales of Compressors with Alemite Couplers

1919	170,000
1920	498,000
1921	438,000
1922	978,000
1923	1,460,000
1924	1,036,000
1925	1,500,218
1926	1,915,855
1927	2,137,539

[fol. 134]

Sales in Dollars

1919	$ 707,355.00
1920	2,263,050.00
1921	1,815,702.00
1922	3,475,572.00
1923	4,141,790.00
1924	3,366,376.82

1925	3,953,371.12
1926	4,139,440.13
1927	4,831,583.84

Sales of "Alemite-Zerk" equipment by The Bassick Manufacturing Company have been as follows:

Sales of Zerk Compressors

1925	826,816
1926	1,138,138
1927	1,224,145

Sales of Zerk Fittings

1925	15,910,476
1926	35,976,831
1927	42,072,481

Sales in Dollars and Cents

1924 (May to December)	$ 186,108.95
1925	1,536,381.56
1926	1,870,871.32
1927	2,126,331.29

Nearly all makes of American automobiles and trucks are now equipped and have for several years been equipped at the factory in which they are manufactured with either the Alemite or the Alemite-Zerk lubricating equipment. This includes more than ninety-four per cent of all such makes. There are a few automobiles, notably the Hudson and Essex, which do not use high pressure lubricating equipments of any kind. There are a few makes of automobile, notably the Packard, which use a so-called centralized lubricating system.

One hundred per cent of all American made automobiles and trucks which employ a high pressure lubricating system of any kind are now standardized on either Alemite or Alemite-Zerk equipment. By this I mean that all of these automobiles and trucks are regularly and uniformly equip- [fol. 135] ped at their factories with either Alemite or Alemite-Zerk lubricating equipment. This condition has been true for a considerable period of time.

The Oakland Motor Car Company used the "Dot" equipment on automobiles manufactured by it from about Febru-

ary, 1925, until about June, 1926. The Olds Motor Works installed the "Dot" system on cars manufactured by it from about July, 1925, to about August, 1926. These are the only two automobiles which, in so far as I am aware, (and I make it my business to know and believe that I do know the facts) have ever had the "Dot" system installed upon them as regular factory equipment. A few trucks have also been factory equipped with the "Dot" system but such factory installation of the "Dot" equipment has been discontinued on such trucks and none is now factory equipped with the "Dot" system.

I am confident that less than one per cent of all the automobiles and trucks which have ever been equipped with a high pressure lubricating system of any kind have been equipped with the so-called "Dot" system.

The Bassick Manufacturing Company owns all of the patents covering the so-called "Dot" system. This "Dot" equipment is not sold for the factory equipment of any automobile. The Carr Fastener Company of Boston is licensed by The Bassick Manufacturing Company to sell this "Dot" equipment for industrial use. Its sales for such purposes are extremely limited. By industrial use I mean use in the lubrication of factory machine tools such as lathes, punch presses, etc. Obviously, such machine tools are not carted up to service stations or garages for lubrication.

Samples of the Lubricating Equipment of The Bassick Manufacturing Company

I have marked as Exhibit A, and present herewith, an "Alemite" compressor of a type of which The Bassick Manufacturing Company has sold many thousands. I have marked as Exhibit B, and present herewith, an assortment of straight and elbow "Alemite" pin fittings of which The Bassick Manufacturing Company has manufactured and sold more than two hundred and fifty million.

In making up the combinations embodying the inventions of the Gullborg and Zerk patents aforesaid, The Bassick Manufacturing Company has manufactured and sold compressors of various sizes, but in other respects the lubri- [fol. 136] cating systems have incorporated the essential features of the patents in a manner identical with the specimens of the equipment submitted herewith.

Adaption and Use of the Trade-Marks and Names "Alemite" and "Alemite-Zerk"

When the lubricating equipment hereinabove described as "Alemite" was first put upon the market it was known as the "Alemite" system. The Bassick Manufacturing Company and its predecessors adopted and continuously thereafter used the trade-name and trade-mark "Alemite" in connection with the sale of all lubricating equipment embodying the invention of the aforesaid Gullborg patent. On February 18, 1921, there was filed in the United States Patent Office, in compliance with the Act of February 20, 1905, as amended, and in compliance with the rules of the Patent Office, an application for the registration of said trade-name and trade-mark for lubricants, lubricant dispensers, lubricant compressors, grease guns, flexible conduits for lubricant applying devices, nipples and fittings to be secured to mechanism to be lubricated, and coupling devices for connection with such nipples and fittings for use upon automobiles and other machinery accompanied by the requisite declaration and with a description and drawing representing the said trade-name and trade-mark, and having paid the statutory fee, a certificate of registration based upon the said application, was issued to The Bassick Manufacturing Company on November 22, 1921, as trade-mark registration No. 148,635.

Similarly, an application for registration of the trade-name and trade-mark "Alemite", as applied to lubricants, including oils and greases, was filed in the United States Patent Office in compliance with the Act of February 20, 1905, as amended, on September 19, 1922, and the various requisites having been complied with, a certificate of registration, based on the said application, was issued to The Bassick Manufacturing Company on February 20, 1923, as trade-mark registration No. 164,590.

The Bassick Manufacturing Company acquired all right, title and interest in and to the good-will of the business of its predecessor, in and to the lubricating system hereinabove described, and in and to the trade-name and trade-mark "Alemite".

The Bassick Manufacturing Company has adopted and applied the trade-mark and name "Alemite-Zerk" to equip-
[fol. 137] ment made and sold by it under the aforesaid Zerk patent No. 1,475,980, and in compliance with the Act

of February 20, 1905, filed an application for the registration of said trade-name and trade-mark for lubricating systems including a plurality of fittings to be secured to the mechanism to be lubricated, and a compressor for successively supplying lubricant to said fittings and parts of such systems, accompanied by the requisite declaration and with a description and drawing representing the said trade-name and trade-mark, and having paid the statutory fee, a certificate of registration, based upon said application, was issued to The Bassick Manufacturing Company on October 26, 1926, under No. 219,975.

All of the business hereinabove described has been conducted in conjunction with the use of the trade-names and trade-marks "Alemite" and "Alemite-Zerk". These marks have been applied to the goods sold by The Bassick Manufacturing Company, and hundreds of thousands of dollars have been expended in advertising and displaying the trade-names and trade-marks prominently as describing the said systems of lubrication and its parts.

As a result the lubricating equipment manufactured and sold by The Bassick Manufacturing Company has become known as "Alemite" and "Alemite-Zerk."

The Importance and Value of the Trade-Marks and Names "Alemite" and "Alemite-Zerk"

Due to the care with which these articles are and have been manufactured, selected and prepared, and due to the stability of these articles and products which have come to be known by the trade-names and trade-marks "Alemite" and "Alemite-Zerk", they have come to be favorably known to the trade and particularly to automobile users throughout the United States as articles of quality and dependability. The names "Alemite" and "Alemite-Zerk" now serve the trade and purchasing public as a means of identifying the products of The Bassick Manufacturing Company and to indicate the origin of these goods. The Bassick Manufacturing Company has never abandoned its trade-names or trade-marks and the registrations thereof are now in full force and effect.

The identifying of The Bassick Manufacturing Company's products with the trade-names and trade-marks

"Alemite" and "Alemite-Zerk" by the trade and purchasing public has become one of the Bassick Company's most important and valuable business assets.

[fol. 138] The Plaintiff's Sales and Distributing Organization

The Bassick Company has 48 distributors located in large cities throughout the United States, and each of these distributors has a certain exclusive territory allotted to him by the company. These distributors handle the Bassick Company's entire business with the exception of contracts for regular and standardized equipment with automobile manufacturers and a few of the larger manufacturers of industrial machines for original equipment. This latter business is handled directly by and from the factory office of the Bassick Company. The 48 distributors each employ salesmen who travel throughout their respective territories and make sales of "Alemite" and "Alemite-Zerk" equipment to service stations, garages, hardware stores, automobile accessory dealers, etc.

The Alemite Lubricator Company of Pennsylvania, Inc., referred to in the defendant's depositions, is not an agent for The Bassick Manufacturing Company. It buys Alemite and Alemite-Zerk products from The Bassick Manufacturing Company and sells them within its prescribed territory. In consideration of its being the exclusive distributor of the products of The Bassick Manufacturing Company within its own territory, it is under agreement not to sell these products in the territories of other distributors; otherwise the Alemite Lubricator Company of Pennsylvania has the utmost freedom of action. It collects its own accounts; stands its own loosses, and pockets its own profits.

The Sale of the "Alemite" and the "Alemite-Zerk" Systems is the Sale of Their Component Parts

When the "Alemite" equipment was first put upon the market by a predecessor of The Bassick Manufacturing Company, it was attempted to make up cartons or packages containing complets sets of equipment for each of the many makes of automobiles then on the market and in use. It was shortly found, however, that in order for a dealer to carry a stock adequate to equip any one of a hundred and

fifty different makes of automobiles, he would have to stock one hundred and fifty different kinds of cartons or packages, each containing a compressor, a hose and a coupling, all of which were identical, and an assortment of pin fittings, many of which were identical but differing largely as to the number of fittings in each assortment. This involved tying up a large sum of money in a large stock of goods [fol. 139] which did not have a rapid turnover.

Very shortly, therefore, and before The Bassick Manufacturing Company was organized in 1919, this attempted method of packing and selling "Alemite" equipment was discontinued, and in its stead it became the invariable practice of the Bassick Company to sell stocks comprising so many compressors, so many hose and couplings, and so many fittings of each and every one of the various thread sizes, etc., manufactured by the company. In consonance with this plan, dealers were encouraged to buy so-called display cabinets comprising a large number of small compartments, in each of which a particular size and style of pin fittings was to be placed. In conformity with this plan also, dealers who handled "Alemite" equipment were supplied with so-called "Manuals" published by The Bassick Manufacturing Company, these Manuals containing lists of the sizes and kinds of pin fittings required for the complete equipment of each and every make and model of automobile or truck currently or theretofore manufactured in the United States. When, therefore, a dealer was called upon to supply the equipment necessary for any given make of automobile, as for example, the Hudson, he referred to his "Manual" where he found a list of the styles and kinds of pin fittings required for all of the bearings of the Hudson car. He selected the necessary fittings from his cabinet (or from other receptacles) and delivered the assortment thus made by him to his customer with or without an "Alemite" compressor, hose and coupling, as might be desired by the customer.

The Bassick Manufacturing Company has always priced and sold its compressors separately, it has always priced and sold its couplers separately, and it has always priced and sold the various types and forms of "Alemite" pin fittings and "Alemite-Zerk" fittings separately, leaving it entirely to the dealers to whom these articles have been sold, to make up the necessary assortments, or combina-

tions. This method has enabled dealers greatly to reduce their investment in an adequate and flexible stock and it has greatly increased the dealer's "turn-over" in his investment in the Bassick Company's equipment.

The Bassick Manufacturing Company has expended hundreds of thousands of dollars in supplying tens of thousands of such dealers with sales helps and aids of various kinds. I shall describe and enumerate a few of these ad- [fol. 140] vertising and sales helps with which such dealers have been supplied.

64,000 Equipment Manuals Now in the Hands of Dealers

For the convenience of the many dealers who sell the lubricating equipment of the Bassick Company, a manual has been prepared and published. This "Manual" is a book of 469 pages containing a list of passenger automobiles, trucks, tractors and trailers manufactured in the United States, together with a list of the number, form and price of fittings necessary to equip each such machine with the Alemite System. In connection with each list is given the location at which each form of fitting is to be applied. This "Manual" enables the dealer to select from his display cabinet or elsewhere the number of each form of pin fitting required by his customer for the equipment of any passenger automobile, truck, tractor or trailer listed in the "Manual." At present there are approximately 64,000 copies of this "Manual" in the hands of dealers. The original 10,000 copies of this "Manual" were compiled, edited and printed at a cost of $37,000. The subsequent revised editions have cost the Bassick Company a little more than fifty cents a copy. The cost of 64,000 copies of this "Manual" now in the hands of dealers has been somewhat in excess of $65,000.

At least one copy of this "Manual" has been supplied to every dealer to whom the Bassick Company has supplied a display cabinet as subsequently described and referred to. Many copies also have been supplied to dealers who have preferred to carry their stock of "Alemite" fittings in receptacles other than the Alemite Display Cabinet. I present herewith as Exhibit C a copy of the "Alemite Equipment Manual" herein referred to.

19,700 "Alemite" Display Cabinets

The Bassick Manufacturing Company has supplied to the dealers handling its equipment 19,700 display cabinets of two forms, one an all-steel cabinet and the other a glass-top cabinet. Colored pictures of both styles of cabinet appear on page 79 of a book which the Bassick Company has published under the title "How to Get More Alemite Business" and a copy of which is presented herewith as Exhibit D. These display cabinets have the name "Alemite" prominently displayed upon all four side walls and upon the top and inside of the hinged cover. They are designed and intended to be placed upon a dealer's counter or upon a stand especially designed and intended for the purpose. [fol. 141] Each of the display cabinets contains a large number of small compartments, in each of which may be placed fittings of a given form. Dealers handling the Bassick equipment apparently find these display cabinets a very convenient means of carrying a stock of lubricating equipment, and these cabinets prominently located in a dealer's store apparently attract attention and act as a reminder and inducement to customers to purchase.

85,000 Price List Catalogues

The Bassick Company has also prepared and published and supplied to its dealers a price list of its equipment. This price list contains detailed illustrations of all parts of its lubricating equipment and repair part lists and prices therefor, together also with the standard list price of a complete system for each of the passenger automobiles, trucks, trailers and tractors manufactured in the United States. This price list or catalogue was first published in June, 1922, and up to date more than 85,000 of these catalogue lists were distributed to dealers throughout the United States. The first issue of this list was printed at a cost of $90.00 per thousand copies and some subsequent issues at a cost slightly less than that. Almost every dealer in automobile or allied equipment throughout the United States has been supplied with one or more issues or copies of this price and repair part catalogue. One of these price list catalogues is presented herewith as Exhibit E.

Dealers find it very convenient to refer to this price list to identify repair parts if and when required in connection with "Alemite" equipment, and also to quote the list price

upon such parts. Dealers find it convenient also to take and quote from this price list the cost of complete equipments for passenger cars, trucks, tractors and trailers, the prices given in the list being correct totals of the price of the various forms of pin fittings required for the many bearings of each automobile, together with a compressor, hose and coupling for use in conjunction with co-operation with the fittings.

Advertising Helps

For the past several years The Bassick Manufacturing Company has at great expense advertised its system of lubrication in the "Saturday Evening Post" and other periodicals having large national distribution. This advertising has been valuable not only to The Bassick Manu- [fol. 142] facturing Company, but also to the dealers in this kind of equipment.

In addition to this, the Bassick Company has gone to great expense in having prepared by experts in this line advertising cuts and copy suitable to be published in newspapers, trade catalogues and periodicals. The Bassick Company has at its own expense made thousands of mat and electrotype cuts of these advertisements and has supplied thousands of these cuts without expense to dealers throughout the United States.

In the publication "How to Get More Alemite Business", Exhibit D, are imprints of scores of the advertising cuts in the form of both mat and electrotype. These books have been distributed in large quantities to dealers throughout the country, thus enabling dealers to avail themselves of the free newspaper cut service offered in this book Exhibit D. Thousands of dealers have been furnished with cuts corresponding with the imprints in this book entirely without expense to the dealers and dealers throughout the United States have used these cuts in newspapers, circular catalogue and other advertising. This book also shows one pages 72 to 74, inclusive, half-tone cuts which have been supplied to dealers upon request without expense to them. On pages 75 to 77, inclusive, are imprints of line cuts which have similarly been supplied by the thousands to dealers without expense to them.

Similarly, dealers throughout the country have been supplied with outdoor signs such as illustrated on page 78 of Exhibit D.

Similarly, dealers throughout the country have been supplied gratis with window display material such as illustrated on pages 80, 81 and 82 of this book.

Without going into further detail, The Bassick Manufacturing Company has at its own expense and in many other ways made its lubricating equipment known to the purchasing public and has by such publicity and such sales help and by the merit of the systems created a large demand and sale for the "Alemite" and "Alemite-Zerk" lubricating equipment.

80,000 Services Station Compressors in Use

Even though the "Alemite" and "Alemite-Zerk" lubricating systems embodying the inventions of the Gullborg and Zerk patents have greatly facilitated the work of satisfactorily lubricating automobiles and other machines and have made such work a comparatively quick [fol. 143] and cleanly operation, still experience has shown that a large proportion of automobile owners and drivers prefer not to lubricate their own automobiles but rather to have it done at greasing or other service stations or at public garages. So, also, there are thousands of owners of fleets of automobiles—taxicabs, delivery cars, trucks, etc.,—who maintain their own garages and at which the lubrication of the entire fleet of cars is effected.

Thousands of such fleets of automobiles have been equipped with Alemite pin fittings and Zerk fittings and the equipment of automobiles added from time to time to such fleets has brought about the sale of large quantities of both styles of fittings.

While the operators of many such greasing and service stations and public garages and fleet garages have employed and still continue to employ smaller sizes of "Alemite" compressors as illustrated on page 8 of the booklet "Alemite Products" (Exhibit F) for forcing the lubricant into the bearings equipped with "Alemite" pin fittings, more than 80,000 service compressors, such as shown on pages 11, 12 and 13, have been sold and presumably are now in use, mostly in the hands of public greasing stations and garages and partly in the hands of automobile fleet owners.

Extensive Use of "Alemite" and "Alemite-Zerk" on Machines Other than Automobiles

This use of the "Alemite" and "Alemite-Zerk" systems of lubrication on machinery other than automobiles has been increasing very rapidly during the last few years.

This extensive use of the "Alemite" and "Alemite-Zerk" systems for the lubrication of machines other than automobiles has already developed to a point where more than 539 manufacturers of industrial machinery now apply Bassick fittings to the bearings of their machines as standard original factory equipment. In some instances such manufacturers have supplied "Alemite" and "Alemite-Zerk" compressors and coupling members with their machines. In other instances such manufacturers have depended upon the wide distribution of such compressors and coupling members already in the hands of the public and have not therefore supplied compressors and conduits and coupling members with the machines sold by them and factory equipped with Bassick equipment.

[fol. 144] The "Alemite" System Was a Commercial Pioneer

So far as I am aware, and I believe I know the fact, there was no system or means of lubrication upon the market prior to the entry of The Bassick Manufacturing Company and its predecessor, The Alemite Die Casting & Manufacturing Company, into this field, comprising a plurality of fittings to be secured to the bearings to be lubricated and a compressor having a discharge conduit provided with a coupling for successively making sealed connections and attachments and detachments with and from the various fittings for the purpose of applying lubricant to the bearings.

Alemite Lubricants

The defendant endeavors to establish the proposition that since the Alemite and Alemite-Zerk lubricating apparatus have gone into use on automobiles to the almost complete exclusion of every other kind of lubricating equipment, "that it will be exceedingly difficult for any grease manufacturer other than The Bassick Manufacturing Co. to sell grease to a trade such as the automobile

trade, when said trade, as well as the public at large will be entirely dependent upon The Bassick Manufacturing Co. for all equipment with which it can dispense such grease into the automobile."

The simple facts of the matter are these: The Bassick Manufacturing Company and its predecessor engaged for several years exclusively in the sale of the Alemite lubricating apparatus of the Gullborg patent in suit. Subsequently it engaged in the manufacture and sale of the Alemite-Zerk lubricating equipment of the Zerk patent in suit. In these activities it acquired a valuable good will in the trade-mark and name, "Alemite."

Only recently The Bassick Manufacturing Company began to sell lubricants under the same trade-mark and name "Alemite."

The grease which is injected into bearings by the Alemite and Alemite-Zerk lubricating apparatus is not made an element of any claim of any patent owned by The Bassick Manufacturing Company. The Bassick Company's apparatus has never been sold under any attempted license or restriction confining its purchasers to the use of Alemite or any other particular lubricant.

It is true that the Alemite lubricants of The Bassick Manufacturing Company are of very high quality, and that they are peculiarly well adapted for use in the lubri- [fol. 145] cating apparatus of The Bassick Manufacturing Company. (This is not true of many other lubricants now and heretofore on the market.) The good will which has attached to the lubricating apparatus of The Bassick Manufacturing Company has doubtless facilitated the sale of Alemite lubricants. This, however, is the total sum and substance of the "bogey" of a "grease monopoly" which in the last few months has been so assiduously represented to the trade and to the courts under the leadership of Messrs. Wiedersheim & Fairbanks, counsel for R. M. Hollingshead & Company here, and for the Frank Miller Company.

Statistics indicate that The Bassick Manufacturing Company now sells about 4% of the chassis lubricant and less than 4% of the transmission and gear case lubricants now used in automobiles. We hope, of course, to increase our sales of Alemite lubricants. We never have attempted to control the sale of, or dictate the use of lubricants by any

resort to the protection afforded by the patents in suit. We do not intend to do so. I do not think we could succeed if we tried.

Since we began to sell grease we have, to be sure, advertised it. We pushed its sale to the best of our ability. This has not, however, been done at the expense of our business in lubricating apparatus. We have continued to advertise and push the sales of our lubricating apparatus just as extensively as we have ever done. The volume and profits arising from our sale of apparatus are many times greater than those arising from our sales of lubricants. Our patents have uniformly been construed by the courts as giving us the exclusive right to sell this apparatus. In the sale of grease we are in open competition with all the world.

Irreparable Injury

The sale of the infringing equipment herein complained of not only deprives The Bassick Manufacturing Company of business and profits which would otherwise come to it, but it interferes with and injures the business of The Bassick Company's regularly constituted distributor who alone is authorized to supply the "Alemite" equipment in his territory.

The forty-eight distributors of the Bassick Company, to each of whom is assigned an exclusive territory, are dependent for their livelihood and profits upon the sale of genuine "Alemite" equipment manufactured and sold by The Bassick Manufacturing Company. Except for its sales [fol. 146] directly to the automobile and other machinery manufacturers, the Bassick Company has no outlet for the distribution of its product in the United States except through its distributors who maintain their own business establishments at their own expense. The outlet of the distributors is in turn mainly through hardware stores, automobile accessory stores, service stations and other dealers in like equipment.

Unless the Bassick Company's distributors are protected against infringement of the patents covering the "Alemite" system by hardware dealers, automobile accessory dealers, garages, service stations, etc., the business of the distributors will become unprofitable, and as a result the entire sales and distributing organizations of the Bassick Company will disintegrate and be lost to it.

This organization has been built up only by years of careful selection, adjustment and reorganization and at an enormous expense of time, effort and money.

If the defendant herein is permitted to continue with its infringement of the Bassick Company's patents, it will encourage other dealers similarly to infringe to the great and practically irreparable detriment of The Bassick Manufacturing Company and its sales and distributing organization. Furthermore, the lubricating equipment sold by the defendant herein has to the casual observer or purchaser the appearance of genuine "Alemite" equipment manufactured by The Bassick Manufacturing Company. Its sale and use under the common belief that it is genuine "Alemite" equipment does and will discredit the Bassick Company's product and greatly detract from the reputation and good-will of the Bassick Company.

Title to Patents in Suit

I submit herewith as Exhibit G copies of certain assignments of letters patent in suit, the original executed copies of which I have in my possession and am ready to exhibit to the parties or their counsel upon request, and I am ready to produce them in court if and when required.

The Prior Patent Litigation of The Bassick Manufacturing Company

The patents of The Bassick Manufacturing Company involved in the present case against The R. M. Hollingshead Company have been involved in a large amount of litiga- [fol. 147] tion. For convenience, the opinions and decrees of the courts up to February 23rd, 1928, have been printed and are submitted herewith in three volumes, marked collectively Exhibit H.

On February 28, 1923, The Bassick Manufacturing Company filed a bill of complaint in the United States District Court for the Southern District of Ohio, Western Division, against The Larkin Automotive Parts Company of Dayton, Ohio, charging, among other things, the infringement of Gullborg patent No. 1,307,734. This cause came on for trial at final hearing on July 10, 11 and 12, 1924, before his Honor, Judge Smith Hickenlooper, and on August 1, 1924, an opinion was rendered by the court finding the said Gull-

borg patent valid and infringed as to Claims 1, 2 and 6 thereof. On October 14, 1924, a decree was entered pursuant to the opinion of the court, and upon the same day an injunction was issued and served upon The Larkin Automotive Parts Company pursuant to the decree. The devices complained of and held to be infringements of Gullborg patent No. 1,307,734, in the said Larkin suit, comprised devices like those illustrated in Figures 2, 6 and 10 of the drawing exhibited herewith as Exhibit I.. No appeal from the said decree was taken by either party.

On May 15, 1923, a bill was filed against The O. K. Manufacturing Company et al., of Dayton, Ohio, charging, among other things, infringement of Gullborg patent No. 1,307,734 by the defendants' manufacture and sale of lubricating equipment like that illustrated in Figures 4-A. 8-A. 11, 15 and 19 of the drawing Exhibit I and couplers of the types illustrated in the drawing submitted herewith as Exhibit I' to be used in conjunction with pin fittings. This cause came on to be heard before his Honor, Judge Smith Hickenlooper, on December 1 and 3, 1925, in the United States District Court at Dayton, Ohio, and in due course an option was rendered finding the said devices to be infringements of the said Gullborg patent, and pursuant to the said opinion a decree was entered on March 9, 1925. The Bassick Manufacturing Company took an appeal from so much of said decree as related to the defendants' alleged right to sell the component parts of the lubricating equipment involved for so-called repair and replacement purposes, and The O. K. Manufacturing Company et al, took an appeal with respect to the finding of validity and infringement of the Gullborg patent and the Winkley reissue patent No. 14,667 which was also involved.

[fol. 148] On November 12, 1923, The Bassick Manufacturing Company filed a suit against The Lyman Manufacturing Company et al., and on August 25, 1924, a suit was commenced against The Peerless Automatic Machine Company in the United States District Court for the Northern District of Ohio, Eastern Division, at Cleveland, Ohio. The Lyman et al., and Peerles cases based in part on Gullborg patent No. 1,307,734 and Winkley reissue patent No. 14,667, were heard simultaneously by his Honor, Judge Westenhaver, on December 22 and 23, 1924, and on February 7, 1925, an opinion was rendered by the court granting an in-

junction and an accounting against both defendants as to Gullborg patent No. 1,307,734 and finding the Winkley reissue patent not infringed. Among the devices involved in the said Lyman and Peerless cases were the compressors, couplers and pin fittings illustrated in Figures 3, 7 and 14, respectively, of the accompanying drawing Exhibit I. The Lyman Manufacturing Company et al. and The Peerless Automatic Machine Company took appeals from the decrees entered pursuant to the opinion on March 4, 1925, with respect to the holding of infringement as to Gullborg patent No. 1,307,734, and The Bassick Manufacturing Company took cross-appeals with respect to the finding of non-infringement of Winkley reissue patent No. 14,667.

On February 3, 1925, the Bassick Manufacturing Company filed bills of complaint in the United States District Court for the Northern District of Ohio, Eastern Division, at Cleveland, Ohio, against Wag's Accessories Company and The Riggs Tire & Supply Company, Incorporated, both of Cleveland, Ohio. The said Wag's and Riggs cases based on Gullborg patent 1,307,734 were tried on May 20, 1925, before Judge Westenhaver, and in due course an opinion was rendered and decrees entered dismissing the bills of complaint. The Bassick Manufacturing Company took appeals from the decrees of dismissal in both cases.

In October, 1925, The Larkin Automotive Parts Company referred to herein, conceiving itself aggrieved by The Bassick Manufacturing Company's bringing of suits against customers of the said Larkin Company, brought a motion to restrain the bringing of further suits, and for an injunction restraining certain other acts of The Bassick Manufacturing Company, which motion was allowed and an injunction was issued, as by the record in the said case will more fully and at large appear. The Bassick Manu- [fol. 149] facturing Company took an appeal from the said order, which was dated October 26, 1925.

In July, 1926, The Larkin Automotive Parts Company appeared by its counsel before his Honor, Judge Smith Hickenlooper, in the United States District Court for the Southern District of Ohio, at Cincinnati, Ohio, and moved for the entry of a decree modifying the decree theretofore entered in the said suit of Bassick vs. Larkin, and pursuant to the said motion an entry was made on July 24, 1926, granting the said defendant the right to sell the

component parts of the lubricating equipment for repair and replacement purposes. The Bassick Manufacturing Company took an appeal from said entry.

In due course, to-wit, on March 18, 1927, the United States Circuit Court of Appeals for the Sixth Circuit at Cincinnati, having heard all of the aforesaid appeals in the Larkin, O. K., Lyman, Peerless, Wag's and Riggs cases, rendered an opinion and entered decrees, a copy of the said opinion and the decrees entered pursuant thereto being contained in Vol. III of the Adjudication Book Exhibit H.

On April 16th and May 3rd, 1927, The O. K. Manufacturing Company and The Larkin Automotive Parts Company filed their petition for a rehearing and supplemental petition for rehearing in the United States Circuit Court of Appeals for the Sixth Circuit, as shown more fully by the accompanying copies marked Exhibits J and K. Thereafter to-wit on May 13, 1927, the Circuit Court of Appeals for the Sixth Circuit filed an opinion and entered an order denying the petition for rehearing, as more fully shown by the printed copy thereof appearing at page 463 of Volume 3 of the Adjudication Book submitted herewith as Exhibit H.

Thereafter, to-wit: On August 12, 1927 The Larkin Automotive Parts Company and The O. K. Manufacturing Company filed their petition for certiorari in the United States Supreme Court, as more fully shown by the copy thereof submitted herewith as Exhibit L; and in due course, to-wit: on October 31, 1927, the said Court entered an order denying the petition, as shown by the copy of the order reproduced at page 461 of Volume 3 of the Adjudication Book identified as Exhibit H.

Thereafter, to-wit: On or about December 13, 1927, upon application to the United States District Court for the Southern District of Ohio, Western Division, a decree was entered in the suit of The Bassick Manufacturing Company against The O. K. Manufacturing Company and A. C. Jones, Jr., Receiver for The O. K. Manufacturing Com-
[fol. 150] pany pursuant to the mandate of the Court of Appeals for the Sixth Circuit. A copy of the decree entered by the Court is reproduced at page 532 of Volume 3 of the Adjudication Book submitted herewith as Exhibit H.

On September 17, 1925, The Bassick Manufacturing Company filed a bill of complaint in the United States District Court for the Northern District of Illinois, Eastern Division, at Chicago, Illinois, agaist Montgomery Ward & Co., Incorporated, charging infringement of Gullborg patent No. 1,307,734, and thereafter The Larkin Automottive Parts Company, of Dayton, Ohio, filed a petition to intervene which was allowed on January 6, 1926, and pursuant to the order allowing intervention The Larkin Automotive Parts Company became a party defendant to the said suit. The case came on for final hearing before his Honor Judge Walter. C. Lindley upon Gullborg patents Nos. 1,307,733 and 1,307,734, and Zerk patent No. 1,475,980, on April 8, 9 and 10, 1926, and thereafter, to-wit on June 19, 1926, the court rendered an opinion finding the said Gullborg and Zerk patents valid and infringed by the defendants by their manufacture and sale of certain equipment, comprising among other things, the lubricating equipment like the coupler, compressor, and pin fitting of the type illustrated in the drawing which is submitted herewith as Exhibit M, which is a copy of Plaintiff's Exhibit No. 141 in said suit. An appeal was allowed The Larkin Automotive Parts Company and Montgomery Ward & Co., Incorporated, from the decree entered by Judge Lindley pursuant to his opinion, and on April 25, 1927, the United States Circuit Court of Appeals for the Seventh Circuit rendered its opinion affirming the decree entered in the District Court. A copy of the opinion of the Circuit Court of Appeals for the Seventh Circuit in said case and the decree of the District Court reviewed therby is contained in Volume III of the Adjudication Book Exhibit H. A photostat copy of Plaintiff's Exhibit 154 in said suit is submitted herewith as Exhibit N, the same being the catalogue of The Larkin Automotive Parts Company referred to in the decree.

Subsequent to the entry of the decree by Judge Lindley in the District Court on July 9, 1926, The Larkin Automotive Parts Company continued the manufacture and sale of the lubricating equipment enjoined in the said decree, and a contempt proceeding was instituted, as a result of which The Larkin Automotive Parts Company was fined $2,000.00, one-half for the use of the United States and one-half for the use of The Bassick Manufacturing Com-

[fol. 151] pany as more fully shown by the copy of the memorandum of the court filed on July 27, 1926, as found on page 254 of Volume 2 of the Adjudication Book submitted as Exhibit H.

On May 24, 1927, The Bassick Manufacturing Company filed a motion for a preliminary injunction to restrain The Larkin Automotive Parts Company from manufacturing, using or selling certain modified forms of lubricating equipment which were sold by The Larkin Automotive Parts Company subsequent to the decree of the District Court dated July 9, 1927. Pursuant to the motion the Court entered an order for a preliminary injunction on May 27, 1927 as shown by the copy of the order appearing at page 749 Volume 3 of the Adjudication Book Exhibit H. I submit herewith as Exhibit 0^1 the 1927 catalogue of The Larkin Automotive Parts Company and as Exhibit 0^2 the miniature Larkin-Thuro catalogue referred to in the said order. I submit herewith as Exhibit 0^3 and 0^4 respectively drawings illustrating the couplers identified as Exhibits U and V of the affidavit of Albin C. Ahlberg referred to in the said order of May 27, 1927. I also submit herewith as Exhibit 0^5 the lubricant compressor and coupler of The Larkin Automotive Parts Company referred to as Exhibit G of the affidavit of A. J. Sawitoski. I submit herewith as Exhibit 0^6 drawing of the coupler submitted by Mr. Sawitoski with this affidavit as referred to in the said order.

Thereafter, to-wit: On or about October 27, 1927, an order was entered to show cause why a preliminary injunction should not issue against The Larkin Automotive Parts Company to restrain the manufacture and sale of still other modified equipment, and pursuant to plaintiff's motion for a preliminary injunction an opinion was rendered and a decree or injunctional order was entered by the Court on December 5, 1927, as shown at page 745 of the Adjudication Book Exhibit H. I submit herewith as Exhibit P a photographic copy of the 1927 catalogue of The Larkin Aufomotive Parts Company and as Exhibit P^1 one of The Larkin Company's lubricant compressor and coupler complained of and referred to in the said order. The evidence before the Court upon the motion for preliminary injunction showed that The Larkin Automotive Parts Company sold an adapter for use with its equip-

ment to make possible with the use of the Alemite lubricating equipment of The Bassick Manufacturing Company the servicing of machines equipped with Alemite pin fittings.

[fol. 152] On or about April 29, 1926, The Bassick Manufacturing Company filed a bill of complaint based upon Gullborg patents numbers 1,307,733 and 1,307,734. against A. E. Faught and H. J. Windmiller, doing business as Motor Parts Station at Fort Worth, Texas. Thereafter, to-wit: on April 8, 1927, this cause came on to be heard at final hearing before his Honor, Judge James C. Wilson, sitting in the United States District Court for the Northern District of Texas, Fort Worth Division, and after hearing the testimony of witnesses called by both parties, and considering the oral arguments and briefs of counsel, the Court entered a decree, a copy of which is found at page 588 Volume III of the Adjudication Book Exhibit H. The devices complained of in that suit and referred to in the decree, comprised pin fittings of the types illustrated in figures 13 and 17 of the drawing submitted herewith as Exhibit I, and lubricant compressors and couplers of the type illustrated in the drawing Exhibit M submitted herewith. That suit also involved the defendant's sale of lubricant compressors and couplers of the type illustrated in the drawing submitted herewith and marked Exhibit Q. The decree in that case has not been modified and is in full force and effect.

On November 20, 1924, The Bassick Manufacturing Company filed a bill of complaint against John Staff, et al., doing business as Staff Brothers Company, charging infringement of Gullborg Patents Numbers 1,307,733 and 1,307,734. The equipment sold by the defendants and complained of in that suit, comprised pin fittings of the type illustrated in figures 11 and 19 of the Exhibit I drawing; and compressors and couplers of the types illustrated in figures 4 and 8 respectively of the Exhibit I drawing. The case came on for final hearing before his Honor, Judge Henry W. Goddard, sitting in the United States District Court for the Southern District of New York upon the testimony of witnesses called by both parties, and the Court, after consideration of the oral arguments and briefs filed by plaintiff and defendant, entered an opinion and en-

tered a decree, as found on pages 256 and 277 of Volume II of the Adjudication Book submitted herewith as Exhibit H.

On January 12, 1927, The Bassick Manufacturing Company filed in the United States District Court for the Eastern District of New York a bill of complaint against The Ready Auto Supply Co., Inc., charging infringement of Gullborg Patents Numbers 1,307,733 and 1,307,734, and Zerk Patent Number 1,475,980, by the defendant's sale of [fol. 153] lubricant compressors of the type illustrated in the drawing submitted herewith as Exhibit Q, and pin fittings of the type illustrated in the same drawing, and pin fittings of the type illustrated in figure 13 of the drawing submitted herewith as Exhibit I. The suit was also based upon the defendant's sale of a Zerk type connector, which comprised a short piece of pipe and a connector member having a depression to co-act with Zerk type fittings of the type illustrated on page 10 of the catalogue of The Larkin Automotive Parts Company submitted herewith as part of Exhibit N, which fittings were also sold by the defendant. The case came on for final hearing before his Honor, Judge Marcus B. Campbell and was tried at final hearing upon the testimony of witnesses called by both parties, and after consideration thereof and briefs filed by both sides, the Court rendered an opinion and subsequently entered a decree on December 30, 1927. The opinion and decree are reproduced on pages 398 and 553 respectively of Volume 3 of the Adjudication Book submitted as Exhibit H.

On November 7, 1927, a contempt proceeding instituted by The Bassick Manufacturing Company in the United District Court for the Southern District of Ohio, Western Division, in the suit against The O. K. Manufacturing Company and A. C. Jones, Jr., Receiver for The O. K. Manufacturing Company, came on for hearing before his Honor, Judge Smith Hickenlooper. This contempt proceeding was based upon the continued sale by A. C. Jones, Jr., of pin fittings of the type illustrated in figure 19 of the drawing submitted as Exhibit I, and upon the conclusion of the hearing the Court rendered an opinion as shown by the copy thereof which appears at page 451 of Volume 3 of the Adjudication Book submitted herewith as Exhibit H.

On or about April 6, 1926, The Bassick Manufacturing Company filed a bill of complaint in the United States District Court for the Eastern District of Michigan, Southern Division, against Richard D. Maher, charging infringement of Gullborg Patents Numbers 1,307,733 and 1,307,734 and Zerk Patent Number 1,475,980. In due course thereafter an order for a preliminary injunction was entered enjoining and restraining the defendant from the further infringement of the said patents. Thereafter the cause came on for hearing before his Honor, Judge Arthur D. Tuttle, sitting in the United States District Court at Detroit, upon an order to show cause why the said defendant [fol. 154] should not be punished for contempt for violating the injunction in connection with the sale of pin fittings. The contempt matter was heard on January 30th, 31st and February 1st, 1928 and on the latter day Judge Tuttle rendered an opinion as shown at page 456 of Volume 3 of the Adjudication Book submitted as Exhibit H.

The lubricating equipment sold by The R. M. Hollingshead Company and complained of in this suit is identified in the affidavits of D. A. Beezley and O. A. Cumming and the devices are further described and illustrated in the affidavit of Ernest W. Davis, the said affidavits having been filed by The Bassick Manufacturing Company in support of its motion for a preliminary injunction in this cause.

Prior Art

The defendants in the hereinbefore described suit between The Bassick Manufacturing Company and Montgomery Ward & Co., Inc., and The Larkin Automotive Parts Company, established the use of certain lubricating apparatus made and sold by the White Motor Company of Cleveland, Ohio. The defendants introduced in evidence a grease ejector identical with that shown in the accompanying photoprint, Exhibit AA, and also a blue print showing the automobile shackle bolt with which this grease ejector was used. This shackle bolt is illustrated in Figure 1 of the accompanying photoprint, Exhibit BB, and has a tapered inlet which is normally closed against dirt by a removable plug.

In said suit the witnesses, Frank L. Brown and Samuel Blakeney, employes of the White Motor Company, testified that the end of the discharge tube of the ejector

is spherical and that the inlet part of the shackle bolt, which is adapted to receive this spherical end, is conical and flares outwardly at an angle of 45 degrees. Figure 2 illustrates the position of these parts during the lubricating operation and is a cross-sectional view of the grease ejector and the shackle bolt, showing the plug of the shackle bolt removed and the spherical end of the grease ejector applied to the tapered inlet of the shackle bolt. The witnesses Brown and Blakeney further testified that this apparatus was standard equipment on automobiles manufactured and sold by the White Motor Company over a period beginning prior to 1909 and lasting until the advent of the Alemite system when this apparatus was discarded in favor of the Alemite system.

[fol. 155] The White prior use was before both the District Court and Circuit Court of Appeals in said suit and both courts held that this White lubricating apparatus did not anticipate the Zerk invention.

Prior Art Introduced in Evidence by the Defendant Herein

The defendant has introduced in evidence twenty-one patents and one prior art publication. One of these patents is the Gullborg patent in issue and another of these patents is the Zerk patent in issue.

Of the nineteen remaining patents, thirteen were in evidence before the Sixth or Seventh Circuit Courts of Appeal, or both, another was set up in an answer in a suit decided by each of said Circuit Courts of Appeal, and still another was cited in a Patent Office rejection which formed part of the Zerk file wrapper introduced in evidence in a suit which was finally decided by the Seventh Circuit Court of Appeals.

Four patents have never been before either of said Circuit Courts of Appeal. One of these four patents is the United States patent to Seng No. 1,322,357 and corresponds to the British and French patents to Seng which were in evidence before both of said Circuit Courts of Appeal. Another of these four patents is the patent to Murphy No. 1,637,326 and is too late to be a reference. The two remaining patents are Hay, et al., No. 499,541 and Crotty No. 1,400,871.

The Hay, et al., patent relates to a centralized lubricating system rigidly and permanently secured to a large

vertical type steam engine such as is used in pumping stations and ships and the contact coupling forming one of the elements of this system is not intended to be used independently of the rest of the system. Furthermore, this coupling is no better than the White prior use which has been considered by a Court of Appeals.

The Crotty patent discloses a valved oil nipple for vehicle wheels. This nipple is intended to be supplied with oil under atmospheric pressure by means of an ordinary oil can and this patent is, therefore, not an anticipation of a pressure lubricating system.

The following chart graphically shows the patents which have been considered by one or both Circuit Courts of Appeal:

[fol. 156] List of Patents Introduced by Defendant and Courts of Appeal which Considered these Patents

14,667, Winkley, Reissue, Evidence 6th and 7th C. C. A.
16,787, Wallace, Reissue, Evidence 7th C. C. A.
242, 141, Laskey and Arnold, Evidence 6th C. C. A.
242,564, Sholder, Evidence 6th and 7th C. C. A.
456,295, Stedham, Evidence 6th C. C. A.
499,541, Hay and McIntyre, ——, ——.
610,359, Lees, Evidence 7th C. C. A. (Answer 6th).
1,117,762, Barcus, Evidence 6th and 7th C. C. A.
1,201,414, Winkley, Evidence 6th and 7th C. C. A.
1,307,733, Gullborg, Evidence 6th and 7th C. C. A.
1,322,357, Seng, (same as French and British patents).
1,400,871, Crotty, —— ——.
1,459,662, Manzel (cited in Zerk application file in evidence in 7th C. C. A.).
1,494,652, Wallace, Evidence 7th C. C. A.
1,637,326, Murphy (too late).

British

6,940, Clarkson, Answer 6th and 7th C. C. A.
3,028, Seng, Evidence 6th and 7th C. C. A.
21,893, Alley, Evidence 6th and 7the C. C. A.

French

20,083, Seng, Evidence 6th C. C. A.
468,869, Seng, Evidence 6th C. C. A.

The publication introduced in evidence is page 258 of the French magazine "Omnia" and illustrated the coupler and nipple of the Seng patents connected to a screw type grease gun by means of a flexible hose. This is no better than the Winkley patent No. 1,201,414 which was in evidence before both the Sixth and Seventh Circuit Courts of Appeal and as a disclosure of Gullborg's coupler structure it adds nothing to the Seng patents which have also been considered by both Circuit Courts of Appeal.

Williams, Bradbury, McCaleb & Hinkle, Solicitors and Counsel for Plaintiff.

Defendant's counsel stipulates and agrees that the foregoing statement of Mr. J. E. Otis, Jr., may be taken and read in evidence at the trial with the same force and effect as if taken in the regular way, under R. S. 863, defendant's counsel, however, reserving the right to object to the same and now objects thereto, on the ground it is incompetent, irrelevant and immaterial, being in part hearsay, and not germane to the issues herein.

Leonard L. Kalish, E. Hayward Fairbanks, Solicitors and Counsel for Defendant.

[fols. 157 & 158] [File endorsement omitted.]

(Here follow photolithographs of side folios 159 and 160.)

FIG. 1.

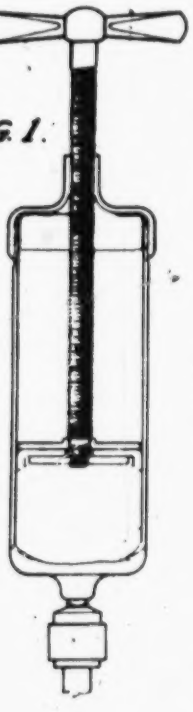

FIG. 2.

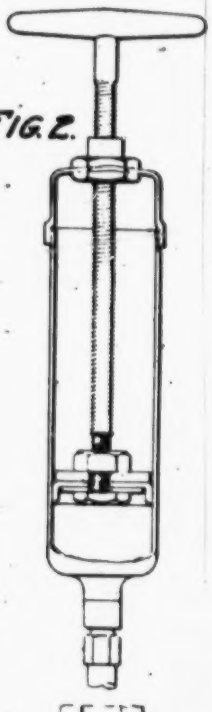

FIG. 3

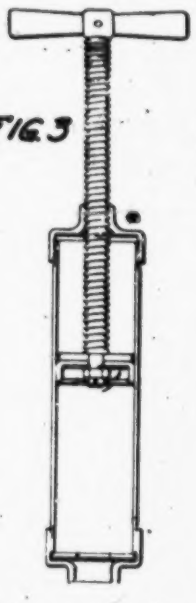

FIG. 4

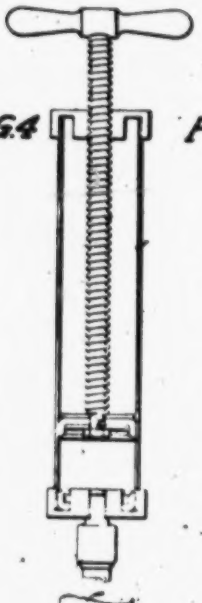

FIG. 4A

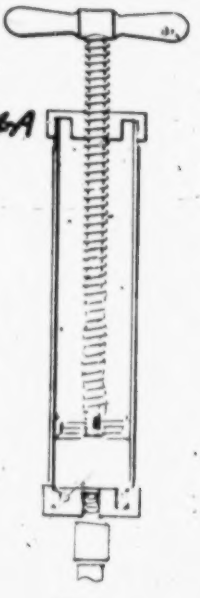

FIG. 5

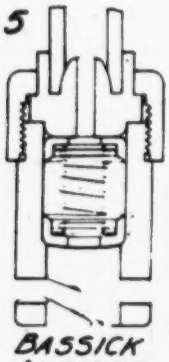

BASSICK ALEMITE

FIG. 6.

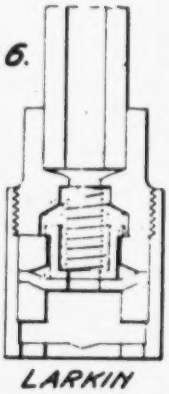

LARKIN

FIG. 7

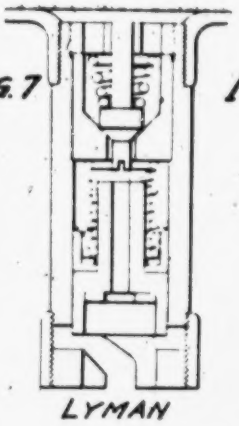

LYMAN

FIG. 8

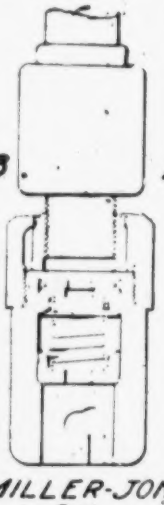

MILLER-JONES O K

FIG. 8-A

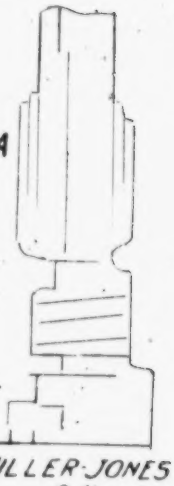

MILLER-JONES O K

FIG. 9

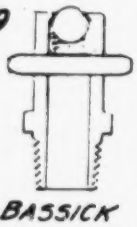

BASSICK ALEMITE

FIG. 10

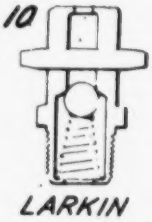

LARKIN

FIG. 11

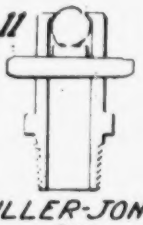

MILLER-JONES O K

FIG. 12

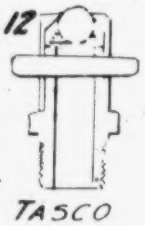

TASCO

PLAINTIFF'S EXHIBIT · I

FIG. 13

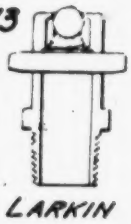

LARKIN

FIG. 14

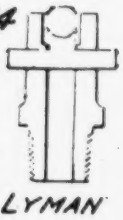

LYMAN

FIG. 15

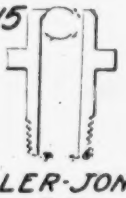

MILLER-JONES O K

FIG. 16

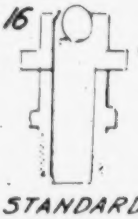

STANDARD PRODUCTS

FIG. 17

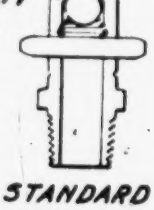

STANDARD PRODUCTS

FIG. 18

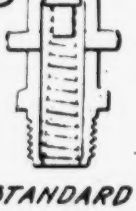

STANDARD PRODUCTS

FIG. 19

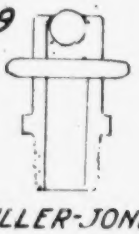

MILLER-JONES O.K

PLAINTIFF'S EXHIBIT I

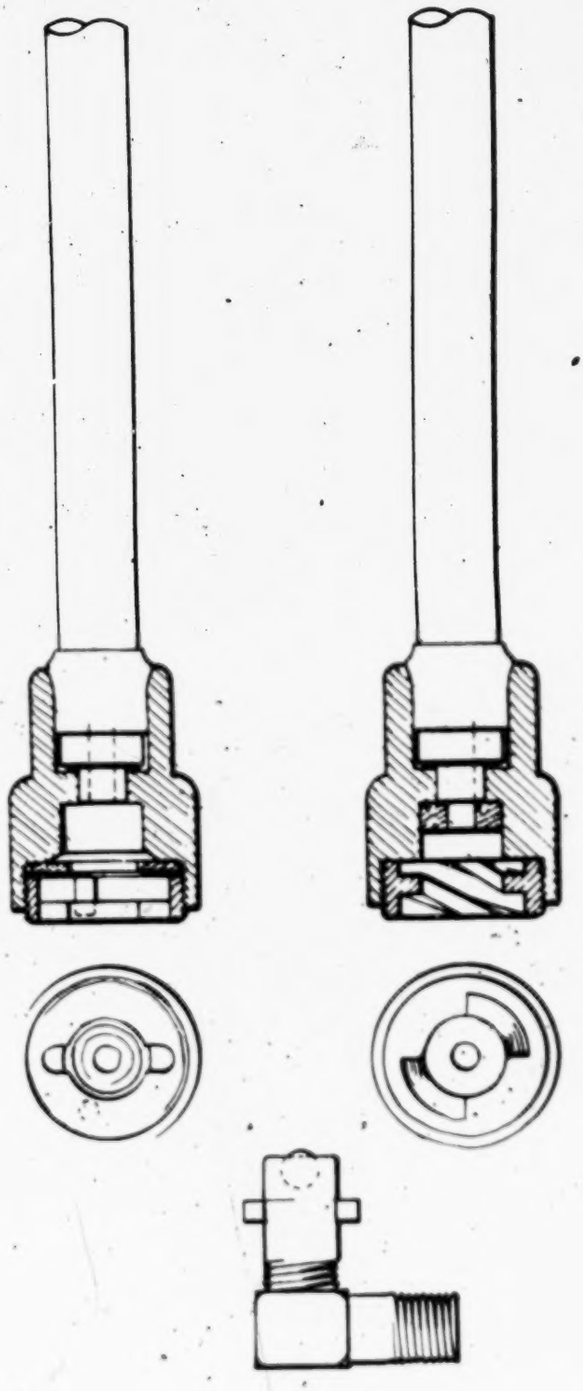

PLAINTIFF'S EXHIBIT I

[fol. 161] EXHIBIT J—STIPULATED OTIS TESTIMONY

(Cover)

UNITED STATES CIRCUIT COURT OF APPEALS, SIXTH CIRCUIT

Nos. 4571-2

BASSICK MANUFACTURING Co., Appellant and Appellee,

v.

THE O. K. MANUFACTURING Co., Appellee and Appellant

Nos. 4601-4766

BASSICK MANUFACTURING Co., Appellant,

v.

THE LARKIN AUTOMOTIVE PARTS Co., Appellee

Petition for Rehearing—Filed Apr. 16, 1927

Arthur B. Mussman, Clerk. Allen & Allen, of Counsel for the O. K. Mfg. Co. and The Larkin Automotive Parts Co.

[fol. 162] IN THE UNITED STATES CIRCUIT OF APPEALS, SIXTH CIRCUIT

Nos. 4571-2

BASSICK MANUFACTURING Co., Appellant and Appellee,

v.

THE O. K. MANUFACTURING Co., Appellee and Appellant

Nos. 4601-4766

BASSICK MANUFACTURING Co., Appellant,

v.

THE LARKIN AUTOMOTIVE PARTS Co., Appellee

PETITION FOR REHEARING

Your petitioners, the O. K. Manufacturing Co. and the Larkin Automotive Parts Co., defendant-appellees in the above cause, respectfully petition your Honorable Court for

a rehearing of the appeal that your petitioners may show the Court, as it believes it can do, that, on the record the Court should find that your petitioners have the right, without infringement or contributory infringement, to sell service grease guns or compressors without hose and coupler attachments to garages which are adapted for use in supplying lubricant to automobiles equipped by the complainant with alemite fittings and alemite couplers which are free from the monopoly of the patents in suit and that claims 14 and 15 of Gullborg patent No. 1307734, are void for double patenting in view of Gullborg patent No. 1307733. (Larkin Rec., vol. 4, p. 332.)

As grounds for this petition your petitioners say:

1. The Court has apparently considered, in sustaining the 12th claim of Winkley, that this claim called for a grease compressor in the combination, whereas in fact the claim does not include the grease gun.

The claim calls for a combination of:

(a) A lubricant receptacle (the hollow spindle 27).

(b) A conduit 8.

(c) Means 36 for detachably securing the conduit to the receptacle, the claw form of attachment.

[fol. 163] (d) A perforated member 37 yieldably mounted in the conduit, and

(e) A spring 46 for yieldingly holding the member 37 in contact with the hollow spindle.

The phrase "means for supplying lubricant to the hollow receptacle" does not refer to the pump, but as the claim plainly defines the structure, this "means" consists in or comprises the conduit with the other devices specified.

Now when we come to the claims of Gullborg, the element of a pump is incorporated in the claims. In claim 12 of Gullborg the element is defined as "means for supplying lubricant to said hollow member under pressure."

The difference between the Winkley claim 12 which omits the grease compressor and the Gullborg claim 12 which includes the grease compressor is manifest on a comparison of the two claims which, as the file wrappers disclose, were each presented by the same solicitors.

Claim 12 of Gullborg calls for the combination:

(a) A bearing.

(b) A hollow member.

(c) Means for supplying lubricant to said hollow member—the grease compressor.

(d) Means for detachably connecting said members.

(e) Means for sealing the connector, comprising:

(f) A gasket, positioned between the members held against one of the members by the pressure of the lubricant.

(g) A spring for initially positioning the gasket.

The element (c) of this claim is not found in Winkley. We believe that the Court was misled by the similarity of the phrase "means for supplying lubricant to said hollow member" in both Winkley and Gullborg, but that an analysis of the Winkley claim will demonstrate that the phrase in Winkley relates only to the conduit and other details as this "means."

The use of the word "comprising" in claims is quite common, and it means rought "consisting in part of." What Winkley has set forth as his invention in claim 12 is a means for filling a bearing with grease under pressure, which consists at least in part of a hose and coupling having the spring pressed and apertured valve. By omitting the compressor itself, he has certainly failed to include it in his combination, and confined his invention to what it really was, viz: the elements making the quick, detachable coupling for applying lubricant to automobiles.

The fact that the grease compressor is omitted as an [fol. 164] element in claim 12 is further evidenced by the fact that of the group of claims 8-17 added in the re-issue to the original claims 1-18, the grease compressor is made an element of claims 9, 11, 16 and 17 by the final phrase substantially the same in each claim: "means for supplying lubricant under pressure to the other end of said conduit", while this element is omitted from the combination of claims 12, 13, 14 and 15.

Claim 12 was the only claim relied upon by the plaintiff because claims 9, 10, 11, 16 and 17 are obviously too broad and are met in the Alley and Seng British patents.

If counsel's analysis of the 12th claim of Wingley is correct, there can be no infringement of the claim in manufacturing and selling grease guns without hose and coupler attachments.

So far as the Winkley patent is concerned, the invention is confined to the combination of coupler and pin fitting, and the issue of contributory infringement by the manufacture and sale of grease guns disappears from the controversy.

The Court has held the 12th claim of Gullborg invalid because of the showing in Winkley, so that the public is free to manufacture and sell the combination of that claim so far as the construction does not infringe the claim of the Winkley patent. This finding would apparently permit the manufacture and sale of the combination of grease compressor, hose, hose coupling and bayonet slot connection for the coupling member to the machine bearing provided the broad, pioneer features covered by the 12th claim of Winkley were not infringed and the issue of "repairs and replacement" is merely academic.

2. We submit that the Court should not have sustained claims 14 and 15 of the Gullborg patent No. 1307734 in view of the prior patent to Gullborg, No. 1307733.

The only difference between claims 14 and 15 of Gullborg No. 1307734 and claims 3, 4 and 5 of Gullborg No. 1307733 is that in No. 1307734 the specific type of pin fitting of the earlier patent is claimed in combination with a grease pump and a coupling for attaching the grease pump to the pin fitting.

The grease gun and means for attaching it to the pin fitting is described in the prior patent, No. 1307733, but is not claimed.

This condition would apparently bring the case directly within the doctrine of Underwood v. Garber, 149 U. S. 234, where two patents, Nos. 348702 and 348703, were issued on [fol. 165] the same day, the earlier numbered patent being for a composition to be applied to paper and the later numbered patent being for the application of the composition to the paper.

Suit was brought on patent No. 348703 and the Court held there was no invention in the use of the specific composition and that the second patent was invalid.

In the instant case, inasmuch as it was admittedly old to employ a grease gun with hose coupler connection for a pin fitting, there could be no invention in the combination of the specific type of pin fitting with any grease gun and hose coupling.

Two valid patents for the same invention can not be granted either to the same or a different party. Miller v. Eagle, 151 U. S. 186.

"The claim of a specific device or combination and an an omission to claim other devices or combinations apparent in the face of the patent are in law a dedication to the public of that which is not claimed."

Miller v. Brass Co., 104 U. S. 350.

If Gullborg was entitled to the combination of claims 15 and 15, these claims should have been included in patent No. 1307733, inasmuch as the combination was fully disclosed in said patent.

The matters to which we have referred were not discussed in the briefs or oral argument of counsel.

Accordingly a rehearing and a stay of the mandate are prayed.

Respectfully submitted, Allen & Allen, of Counsel for the O. K. Mfg. Co. and The Larkin Automotive Parts Co.

We hereby certify that we have examined the foregoing petition for rehearing and in our opinion the petition is well founded in point of fact and law and it is not interposed for the purpose of delay.

Allen & Allen, Counsel for the O. K. Mfg. Co. and The Larkin Automotive Parts Co.

[fol. 166] EXHIBIT K—STIPULATED OTIS TESTIMONY

(Cover)

UNITED STATES CIRCUIT COURT OF APPEALS, SIXTH CIRCUIT

Nos. 4571-2

BASSICK MANUFACTURING Co., Appellant and Appellee,

v.

THE O. K. MANUFACTURING Co., Appellee and Appellant

Nos. 4601-4766

BASSICK MANUFACTURING Co., Appellant,

v.

THE LARKIN AUTOMOTIVE PARTS Co., Appellee

SUPPLEMENT TO THE PETITION FOR REHEARING—Filed May 3, 1927

Arthur B. Mussman, Clerk. Allen & Allen, of Counsel for the O. K. Mfg. Co. and The Larkin Automotive Parts Co.

[fol. 167] UNITED STATES CIRCUIT COURT OF APPEALS, SIXTH CIRCUIT

Nos. 4571-2

BASSICK MANUFACTURING Co., Appellant and Appellee,

v.

THE O. K. MANUFACTURING Co., Appellee and Appellant

Nos. 4601-4766

BASSICK MANUFACTURING Co., Appellant,

v.

THE LARKIN AUTOMOTIVE PARTS Co., Appellee

SUPPLEMENT TO THE PETITION FOR REHEARING

Since the filing of the petition for rehearing in the instant case, the Court of Appeals of the Seventh Circuit

has, on April 25th, rendered its opinion in a cause pending in the Seventh Circuit between The Bassick Manufacturing Company v. The Larkin Automotive Parts Company, No. 3823.

In this suit the two Gullborg patents 1307733 and 1307734 were in issue. The claims relied on and considered by the Court of Appeals were claims 3, 4 and 5 of Gullborg patent 1307733, and claims 1, 2 and 6 of Gullborg patent 1307734.

Claims 14 and 15 of the later numbered patent 1307734 were not considered by the Court of Appeals of the Seventh Circuit.

A copy of the decision of the Seventh Circuit is hereto attached.

From its opinion it will be noted that the Court in the Seventh Circuit considered that it ought to be governed by the prior decision of this Court, and it had this to say concerning Gullborg patent 1307733:

"This patent likewise was involved in both of the decisions cited above. No contention is made, however, that the Ohio decision is binding here for the parties are not the same.

This patent, however, has been before many District Courts and has been uniformly sustained. Its validity has been assailed in some twenty different suits. In each in- [fol. 168] stance, the attack failed. It has been so construed as to permit of a liberal equivalency of its novel element. In fact, in the Sixth Circuit Court decision, one of the infringing devices was similar to the device manufactured by appellant.

Appellant frankly concedes that on the issue of validity the question is one involving invention. In other words did the introduction of the novel element in the combination evidence mechanical skill or inventive genius?

In view of the discussion of these patents in the opinions referred to, nothing will be accomplished by an elaboration of our views. We conclude that claims three, four and five of this patent are valid and infringed."

The result of the two decisions of this Circuit and the Seventh Circuit is that in suits between the same parties, a patent on the pin fitting alone has been sustained, and also a patent on the use of the pin fitting in the only way it can be used, that is, with any construction of compressor

and coupling. The situation in the instant case seems exactly parallel with the situation in Underwood v. Gerber, 149 U. S. 224.

In that case the patent in suit 348073 claimed

"A sheet of material or fabric coated with a composition composed of a precipitate of dye matter in combination with oil, wax or oleaginous matter."

The other patent, 348072, claimed

"A composition composed of a precipitate of dye matter in combination with oil, wax or oleaginous matter."

The Supreme Court held that the composition called for in 347073 as coated on fabric was already known and described in patent 348072.

In the lower court leave was given the complainant to amend its bill alleging ownership and infringement of patent 348072. This the plaintiff failed to do, and the bill was dismissed.

The Supreme Court held the decree of the lower court must be affirmed saying: "There was no patentable novelty or invention in view of earlier patents and publications in applying an existing coloring substance to paper."

The Court further held that inasmuch as the composi-
[fol. 169] tion was not claimed in 348073, the claim actually made operated in law as a disclaimer of what was not claimed, and that there was no invention in applying it to the paper as claimed in patent 348073.

Applying the principle of this case to the instant case, The Bassick Company sued on patent 1307733 in the Chicago district, and did not count on claims 14 and 15 of 1307734, while in this district they did not sue on patent 1307733 but did count on claims 14 and 15 of 1307734.

This Court, not having its attention called to the claims of patent 1307733 on the pin fitting, we think, inadvertently sustained claims 14 and 15, when they should have held that the specific pin fitting construction was old as shown in patent 1307733, and that so far as claims 14 and 15 of 1307734 were concerned, the specific pin fitting must be regarded as disclaimed, and as being public property, and this Court should have held that there was no invention in combining this old pin fitting with a grease pump having a discharge conduit and means co-acting with the ends of the pin for

detachably connecting the discharge end of said conduit with the grease gun.

As the Court has found in the instant case, the general combination of grease gun and hose coupler with means for detachably connecting the discharge end of the coupler with the pin fitting was old in Winkley. Therefore, it would seem to follow from Underwood v. Gerber, that if the particular construction of pin fitting was old as disclosed in the Gullborg patent 1307733, there could be no invention in the combination of this old pin fitting with the old grease gun and hose coupler as called for in claims 14 and 15 of Gullborg 1307734.

Respectfully submitted, Allen & Allen, of Counsel for the O. K. Mfg. Co. and The Larkin Automotive Parts Co.

We hereby certify that we have examined the foregoing petition for rehearing and in our opinion the petition is well founded in point of fact and law, and it is not interposed for the purpose of delay.

Allen & Allen, Counsel for the O. K. Mfg. Co. and The Larkin Automotive Parts Co.

[fol. 170] IN THE UNITED STATES CIRCUIT COURT OF APPEALS
FOR THE SEVENTH CIRCUIT

October Term, 1926, April Session, 1927

No. 3823

April 25, 1927

THE LARKIN AUTOMOTIVE PARTS CO. and MONTGOMERY WARD & Co., Appellants,

vs.

THE BASSICK MANUFACTURING COMPANY, Appellee

Appeal from the District Court of the United States for the Northern District of Illinois, Eastern Division

Before Evans, Page and Anderson, Circuit Judges

EVANS, Cir. J.:

This appeal involves the validity and infringement of three patents, to wit: Gullborg patent 1,307,733, Gullborg

patent 1,307,734 and Zerk patent 1,475,980—all owned by appellee.

Before considering the defenses to Gullborg's second patent we must determine the effect of a recent decision of the court of appeals of the sixth circuit (— Federal Reporter —, 2nd ed.) wherein the claims here contested were sustained and found to be infringed.

Upon motion of appellee and with consent of appellants, the decree appealed from in that case, the opinion of Judge Denison and the mandate of the appellate court have all been filed herein. From this record it appears that in one suit appellee sued appellant Larkin Automotive parts Co. in the District Court of Ohio and a decree for plaintiff was entered. No appeal was taken. A year later when an accounting was in progress, the court entered an order modifying somewhat its interlocutory decree and holding that certain of the defendant's products did not infringe this patent.

An appeal was then taken by the appellee herein and the court held that the claims of the patent here involved were valid and infringed.

While this suit was pending, the instant suit was brought in the Northern District of Illinois and Judge Lindley found the patent valid and infringed. (— Fed. Rep. —, 2nd ed.) From th-s decree appellants prosecuted the present appeal. [fol. 171] Much space may be saved by a reference to these two decisions for a statement of the facts, the prior art, the claims involved and a discussion of the issues presented.

These facts invoke the doctrine of res adjudicata or estoppel by judgment (Hart Steel Co. v. Railroad Supply Co. 244 U. S. 294) unless we conclude that the decree of the court of appeals of the Sixth Circuit is not final.

Final, as used by the courts when dealing with the subject of res adjudicata, is not to be determined by adjective terms. If the decree in fact finally determines the issues presented by the pleadings and settles the controversies over the subject matter involved, it is sufficiently final to determine other litigation between the same parties respecting the same issues regardless of the fact that it may be in legal nomenclature termed an interlocutory decree.

The Larkin Automotive Parts Co. cannot further contest the validity of the claims involved in this patent in the Ohio litigation. We conclude therefore that for the purposes

of applying the doctrine of res adjudicata, the decree of the Circuit Court of Appeals is a final decree so far as it determines the validity and infringement of claims one, two and six of Gullborg patent 1,307,734.

We recognize that the doctrine of res adjudicata in its strict sense may not be readily applied in patent suits because the infringement in the second suit would not ordinarily be identical with the infringement in the first suit. It would doubtless be more accurate to use the term, estoppel by judgment, than the term res adjudicata when applying the doctrine to patent suits. The result, however, is the same.

But we are not required to rest our decision solely on the doctrine of estoppel by judgment. As to appellant Montgomery Ward & Co., no estoppel exists, for it was not a party to the Ohio litigation. We believe, however, that the rule of comity leaves us no alternative but to affirm the decision of the District Court.

Appellee has sustained the claims of this patent here involved in over sixty federal district courts. In at least thirty-five suits, the infringers contested the validity of the patent. In every instance the patent was sustained. We see no reason why the rule of comity should not be applied to patent suits where the reason for the rule exists It is true that evidence bearing upon the prior art as ell as the issue of infringement may often differ on the second trial. Of course, if the difference is material, the rule of [fol. 172] comity has no application. In fact, it should not be overworked in any case. There is doubtless more danger of its too frequent appliance than otherwise. Certainly where only one other court has passed on the validity of the patent, this court would not be relieved of its duty to exercise its judgment uncontrolled by the decision of the other court. But where the question of validity, as here, turns upon the effect of the inventor's advance over the prior art, the opinions of other judges should not be ignored. In fact, when numerous courts have thus spoken, and all have reached the same conclusion, it would require an unusual case to justify the refusal to follow it. As was stated in Mast, Foos & Co. v. Stover M'f'g Co., 177 U. S. 489,

"The obligation to follow the decisions of other courts in patent cases of course increases in proportion to the number of courts which have passed upon the question, and the concordance of opinion may have been so general as to become a controlling authority."

Gullborg patent 1,307,733. This patent likewise was involved in both of the decisions cited above. No contention is made, however, that the Ohio decision is binding here for the parties are not the same.

This patent however has been before many District Courts and has been uniformly sustained. It validity has been assailed in some twenty different suits. In each instance, the attack failed. It has been so construed as to permit of a liberal equivalency of its novel element. In fact, in the Sixth Circuit Court decision, one of the infringing devices was similar to the device manufactured by appellant.

Appellant frankly concedes that on the issue of validity the only question is one involving invention. In other words, did the introduction of the novel element in the combination evidence mechanical skill or inventive genius?

In view of the discussion of these patents in the opinions referred to, nothing will be accomplished by an elaboration of our views. We conclude that claims three, four, and five of this patent are valid and infringed.

Zerk patent 1,475,980. Three claims (2, 3, and 5) are involved. Claim two is herewith set forth:

"2. In a lubricating apparatus the combination with a lubricant receptacle element of a lubricant reservoir ele- [fol. 173] ment of a lubricant reservoir for supplying lubricant thereto, means to put the lubricant in the reservoir under pressure, a lubricant feeding nozzle element, said reservoir communicating lubricant under pressure thereto, said receptacle element and said nozzle element having cooperative substantially non-compressible contact faces and opening therethrough, the nozzle contact face having a concavely spherical surface, the other contact face having a dirt cutting circumferential edge portion adapted to be embraced within the spherical surface of the nozzle face and providing the sole contact therewith when the nozzle is pressed against the receptacle element from any one of a

plurality of angularly different directions, to make a sealed, substantially non-yielding lubricant conducting connection between the face openings."

Figure three of the drawing is also reproduced as illustrating the novel elements of the claim.

Drawing

Fig. No. 3

Zerk Patent

No. 1,475,980

The asserted novelty of this patent lies in the "concavely spherical surface of the nozzle" and a "dirt cutting circumferential edged part adapted to be embraced within the spherical surface of the nozzle face." The results indicate that the introduction of these novel elements in the combination added materially to the solution of the problem that confronted the designer of apparatus for greasing automobile cars. Upon the oral argument we were giving a demonstration of its successful workings. The grease was placed under high pressure and with no leakage at the point of contact between the nozzle and the dirt cutting edge of the nipple. Witnesses testified to the necessity of high grease pressure—that with the Zerk apparatus, pressure of eight thousand pounds per square inch was obtainable. Under such pressure, the grease was transferred to the bearing without leakage at the joints. The [fol. 174] advantages of such results are obvious and need not be elaborated. It must be admitted, however, that advantageous as are the results and novel through the elements be, invention does not appear unless such an advance over the prior art was made as represented the genius of the inventor rather than the skill of the mechanic.

Appellants insist that this advance represents merely mechanical skill and was partially, if not fully anticipated, by the so-called White Company's lubricating system. Perhaps the best answer to this asserted anticipation is the action of the White Company. The White Motor Company abandoned its apparatus when Appellee's lubricatiig system appeared on the market. It was one of the first manufacturers to adopt the Zerk equipment. Without going into

detailed statement of the differences between White's apparatus or Wallace's patent No. 1,494,652 and Zerk's apparatus we will content ourselves by saying that neither was an anticipation of the concept or the structure of Zerk.

What Zerk undertook to do was, as he says, to design a cheaper gun that could be handled in one hand, and do away with the dust caps or provide means to exclude the dust and to get a perfect metal to metal contact between the feeding nozzle element and the lubricant receptacle element upon the automobile by making a dirt-cutting circumferential edge portion upon one element to fit into an angle the conically spherical element of the other element. While there are certain important features described in the specifications, apparently not covered by the claims in suit, we are of opinion that the Zerk construction, made in accordance with the claims, is a distinct advance in the respects described by him over the known practices of the art and that claims involved, 2, 3, and 5, are valid.

It is hardly necessary to discuss the question of the infringement of these claims for they were all clearly infringed.

When this appeal was allowed, the court stayed the injunctional part of its decree upon the understanding that this case would be presented to this court at the October 1926 session. In view of the delays that have occurred in hearing and disposing of this appeal, we think it necessary for the due protection of the prevailing party that this order be vacated.

The decree is affirmed. The order of the District Court [fol. 175] staying the enforcement of the decree is hereby vacated.

A true Copy.—Teste:

—— ——, Clerk of the United States Circuit Court of Appeals for the Seventh Circuit. Rec'd Aug. 22, '27.

PLAINTIFF'S EXHIBIT "L"—Stipulated Otis Testimony

Supreme Court of the United States

October Term, 1927

No. 442

THE O. K. MANUFACTURING COMPANY, Petitioner,

v.

THE BASSICK MANUFACTURING COMPANY

No. 433

THE LARKIN AUTOMOTIVE PARTS COMPANY, Petitioner,

v.

THE BASSICK MANUFACTURING COMPANY

Petition for Writs of Certiorari to the United States Circuit Court of Appeals for the Sixth Circuit and Brief in Support Thereof

Alfred M. Allen, Wellmore B. Turner, Counsel for Petitioners.

(32,894)
(32,895)

[fol. 176] Index

	Page
Petition for writs of certiorari	166
Question presented	166
Brief statement of the case	167
Argument	170

Table of Cases Cited

Alexander Milburn Co v. Davis-Bournonville Co., 270 U. S. 390, 401	173
Bradley v. Eccles, 143 Fed. Rep., 522	171
Brigham v. Coffin, 149 U. S. 557, 562	173
Doig v. Morgan Co., 122 Fed. 460, 462	171, 173
Ex Parte McNeil, 20 App. D. C., 294	170, 173
Guthrie v. Curlett, 10 Fed. (2d), 725, 726	173

Index—Continued

Page

Langen v. Warren Axe Tool Co., 184 Fed. Rep. 720 ..... 170, 173
MacGregor v. Vaco Grip Co., 2 Fed. (2d) 655 .... 171, 172
Miller v. Brass Co., 105 U. S. 350 ..... 170, 172
Miller v. Eagle, 151 U. S. 186 ..... 170, 173
Underwood v. Gerber, 149 U. S. 224 169–173
Writing Company v. Elliott Co., 106 Fed. Rep. 507, 508 173

[fol. 177] Supreme Court of the United States

October Term, 1927

No. 442

The O. K. Manufacturing Company, Petitioner,

v.

The Bassick Manufacturing Company, Respondent

No. 443

The Larkin Automotive Parts Company, Petitioner,

v.

The Bassick Manufacturing Company, Respondent

Petition for Writs of Certiorari to the United States Circuit Court of Appeals for the Sixth Circuit and Brief in Support Thereof

To the Honorable the Chief Justice and Associate Justices of the Supreme Court of the United States:

Your petitioners, The O. K. Manufacturing Company and The Larkin Automotive Parts Company, respectfully prays for the issuance of writs of certiorari to review a decision and decrees of the United States Circuit Court of Appeals for the Sixth Circuit in the above-entitled causes, which are actions for the infringement of patents.

Question Presented

The question presented for determination in the instant case is identical with the issues before this Court in Underwood vs. Gerber, 149 U. S., 224, and the question to be determined is whether the interpretation put upon that case by the Circuit Court of Appeals of the Sixth Circuit is correct or incorrect.

Brief Statement of the Case

The patent involved is No. 1,307,734, for a lubricating means, granted June 24, 1919, on an application filed December 21, 1918, to Arthur V. Gullborg. The claims in- [fol. 178] volved were claims 14 and 15 of that patent.

The invention consists of a tubular member having one end flanged inwardly to provide a closure seat, for a closure member, with a pin extending through the tubular member and on both sides thereof with a spring confined between the pin and the closure member to hold the closure member on its seat and a grease pump with a discharge conduit and a bayonet slot connection with the pin for detachably connecting the discharge end of the pump to the tubular member.

This special construction of tubular member is identified in the records and opinions as a pin fitting by reason of the fact that each fitting carries a pin driven transversely through it and projecting at each side into the open, adapted to make a union of the bayonet joint type with various forms of coupling members attached to the discharge end of a grease gun.

Devices of the kind in question were introduced in enormous quantities by the respondent under the trade name of the "Alemite High Pressure System," and the grease cups, which had heretofore been in use generally for the lubrication of bearings in automobiles, were removed and the tubular members substituted therefor. The Alemite High Pressure System has been quite generally adopted and installed on something like 7,000,000 automobiles, and the essential issue presented is the right of competing manufacturers to furnish grease guns, upon which there are no patents, for this lubrication.

The validity of the Gullborg patent, No. 1,307,734, was in issue with a number of other patents in separate suits brought by The Bassick Manufacturing Company against a number of different manufacturers, including your petitioners.

The various cases were argued at different times in the Circuit Court of Appeals for the Sixth Circuit, but the cases were consolidated by that court and a decision rendered March 23, 1927, in all of the cases (18 Fed. Rep., 2d, 29) (Larkin Record, pp. 436-456; O. K. Record, pp. 323-343).

Thereupon a petition for rehearing and a supplement thereto was filed by your petitioners, which petition was subsequently denied and the order entered May 13, 1927 (Larkin Record, pp. 474-475; O. K. Record, pp. 357-358).

Among the patents before the court of appeals was the [fol. 179] patent to Gullborg, No. 1,307,733, granted June 24, 1919, on an application filed February 11, 1918, for a lubricating apparatus identical with the invention disclosed in patent No. 1,307,734, so far as the claims in issue were involved.

This patent, No. 1,307,733, however, only claimed the tubular member construction, and while it disclosed the grease pump and coupling means, without which the tubular member and its parts would be useless, it did not claim the grease pump and its coupling connection, leaving that combination for the later filed application of December 21, 1918.

We select claim 15 of patent No. 1,307,734 for comparison with claim 4 of patent No. 1,307,733, which we have placed in parallel columns.

Patent 1,307,733 Claim 4	Patent 1,307,734 Claim 15
1. A tubular member.	1. A tubular member.
2. One end flanged inwardly to provide.	2. One end flanged inwardly to provide.
3. A closure seat.	3. A closure seat.
4. A closure.	4. A closure.
5. A pin extending through the tubular member.	5. A pin extending through the tubular member.
6. From both sides thereof.	6. From both sides thereof.
7. A spring confined between the pin and closure and tending to hold said closure on its seat.	7. A spring confined between the pin and closure and tending to hold said closure on its seat.
	8. A grease pump having a discharge conduit.
	9. Means coacting with the ends of the pin for detachably connecting the discharge end of said conduit with the grease pump.

We have selected claim 15 as more definite than Claim 14, which claim calls for a connection of the discharge end of the conduit with the grease pump, a construction not shown in patent 1,307,734, although it is shown in patent 1,307,733. The defense is that the use of the grease pump [fol. 180] and means for connecting to the fin fitting is a necessary part of the invention of patent No. 1,307,733. The whole complete invention of claims 14 and 15 is fully disclosed in patent No. 1,307,733. The invention is for a specific construction of pin fitting which is entirely useless and not a complete invention unless combined or used with a grease pump and means for attaching it to the pin fitting.

There was no patentable invention in the combination of a pin fitting with a grease pump and means for detachably connecting the grease conduit to the pin fitting.

This combination is fully shown in Winkley, 1,201,414, of October 17, 1916, reissue 14,667, more than two years prior to Gullborg.

The situation in the instant case seems exactly parallel with the situation in Underwood vs. Gerber, 149 U. S. 224.

In that case the patent in suit No. 348,073 claimed:

"A sheet of material or fabric coated with a composition composed of a precipitate of dye matter in combination with oil, wax or oleaginous matter."

The other patent, No. 348,072, claimed:

"A composition composed of a precipitate of dye matter in combination with oil, wax or oleaginous matter."

This Court held that the composition called for in No. 348,073, as coated on fabric, was already known and described in patent No. 348,072.

In the lower court leave was given the complainant to amend its bill alleging ownership and infringement of patent No. 348,072. This the plaintiff failed to do, and the bill was dismissed.

This Court held the decree of the lower court must be affirmed, saying: "There was no patentable novelty or invention in view of earlier patents and publications in applying an *existing coloring substance* to paper." (Italics ours.)

This Court further held that inasmuch as the composition was not claimed in No. 348,073, the claim actually

made operated in law as a disclaimer of what was not claimed, and that there was no invention in applying it to the paper as claimed in patent No. 348,073.

[fol. 181] In every respect the instant case is in complete accord with Underwood vs. Gerber.

If the invention in Underwood vs. Gerber was obviously only in the new composition, the effect was the same as in the instant case, which led this Court to say that two valid patents for the same invention cannot be granted either to the same or a different party, citing Miller vs. Eagle, 151 U. S., 186, and also citing Miller vs. Brass Co., 104 U. S., 350.

The essence of the Underwood vs. Gerber case is that patents can only be valid which embody some new invention, and that where the combination of parts is old, as is evident from the reference in Underwood vs. Gerber to the prior use of other compositions applied to paper and by the reference to Winkley in the instant case, and the inventor has improved one of the parts, the composition in that case and the pin fitting in the instant case, no valid patent can issue for the substitution in the old combination of the new part, and the only valid patent must be for the new thing.

This is the doctrine which governs the Commissioner of Patents in issuing patents and was first announced in Ex Parte McNeil, 20 App. D. C., 294.

In that case the invention consisted of an improvement in sewing machines in which a combination of a trimmer with a new stitch-forming mechanism was claimed. The court said:

"Borton and Willcox having invented the combination of a trimmer with a stitch-forming mechanism, it is not invention to combine a trimmer with another stitch-forming mechanism whether the stitch-forming mechanism be new or old. No new result is accomplished by appellant which differs in kind from the result accomplished by Borton and Willcox."

This doctrine was approved in Langen vs. Warren Axe Tool Co., 184 Fed. Rep., 720.

"The grab-hooks and draft appliance of the patent, in combination, coact as grab-hooks and draft appliances have always done. The grab-hook of the patent by reason of its

peculiar construction and form is very probably an improvement of no little utility. But the patentee can not, merely because of that fact, have a patent for a combination which shall have, as one of its elements, a pair of such grab-[fol. 182] hooks. He did not invent the combination. He invented, if he invented anything, an improved grab-hook."

See also: Bradley vs. Eccles, 143 Fed. Rep., 522.

The court of appeals refused to apply the doctrine of Underwood vs. Gerber that there could be no invention in a claim for the combination of an earlier specific construction in combination with an old device with which it must be used. It declined to consider the disclosure of patent No. 1,307,733 as an "earlier construction," contrary to the holding of this Court in Underwood vs. Gerber, in which this Court had held that the specific composition of the earlier patent was an existing substance and that there was no invention in applying this existing substance to paper in view of the fact that it was old to apply other compositions to paper.

In taking this position the court of appeals contented itself with a reference to its discussion of Underwood vs. Gerber in MacGregor vs. Vaco Grip Co., 2 Fed. (2d), 655), where the case of Underwood vs. Gerber was taken to apply only in the case of an inseparable process and product, and it was held that Judge Blatchford had made an unnecessary reference to the composition of the earlier patent as an "existing substance."

In thus holding, the Sixth Circuit Court of Appeals disagreed with the finding of the Court of Appeals of the Second Circuit in Doig vs. Morgan Co., 122 Fed., 460, 462, in its interpretation of the Underwood case.

But in the MacGregor case, 2 Fed. (2d), 655, the facts are clearly distinguishable from the facts in the case at bar.

In the MacGregor case the two Smith patents, No. 1,439,-338 and No. 1,439,339, both involved patentable improvements. The claims in 1,439,339 covered patentable improvements over the claims in the generic patent 1,439,338, and the court held that they could not consider Underwood vs. Gerber as going to the extent of holding that the earlier numbered patent was prior art as to the later patent.

In the instant case there is only one invention. The entire invention is disclosed in the first patent. The pin fit-

ting is useless without the grease pump and attaching means.

[fol. 183] The Sixth Circuit distinguished the MacGregor case from Underwood vs. Gerber because the second patent disclosed patentable improvements over the first patent. In its comments the court said (p. 657):

"In Underwood vs. Gerber it was thought that the splitting up of one indivisible right into two and subjecting the infringer to suits by two different owners of the right infringed justified applying the defense of double patenting as against two patents issued on the same day. Of course, the substance must be existing before it could be spread on paper. The case was practically one of inseparable process and product. The composition was not a useful or completed invention until it was spread upon the paper; the specification of the composition patent described the spreading; and the claim by necessary implication included the spreading. We take this to be the principle of decision which should be deduced from Underwood vs. Gerber rather than any inference from the unnecessary reference to 'an existing substance.'"

In the instant case the specific pin fitting corresponds to the composition and the grease pump corresponds to the use of the composition on the paper fabric. The Underwood vs. Gerber case can be read directly on the instant case by merely substituting for "composition," the phrase "specific pin fitting," and substituting for the "paper material," the phrase "grease pump and connecting devices." The interpretation of Underwood vs. Gerber as given in the MacGregor case assumed a set of a, b, c claims in one patent and a, b, c, and d claims in the second patent, and they were of the opinion that the a, b, and c patent could not be used as prior art to the a, b, c, d patent even if there was no invention in adding the d element on the a, b, c combination.

The vital difference between the MacGregor case and the instant case is that the a, b, c, d invention of Gullborg is shown and described in the first a, b, c patent No. 1,307,733, and could have been claimed in that patent, and, not being claimed, was disclaimed, in view of Miller vs. Brass Co., 104 U. S., 350, and under such circumstances the second patent must be invalid.

It is submitted that the time has arrived when this Court should reaffirm and reestablish the true doctrine of Under- [fol. 184] wood vs. Gerber, which has apparently been misconstrued and misinterpreted by the lower courts. The case was cited only twice by this Court until the present term; once in Brigham vs. Coffin, 149 U. S., 557, 562, decided at the same time as the Underwood case, as to the character of the inventive step, and at the next term of the court in Miller vs. Eagle Co., 151 U. S., 186, 198, in support of the proposition that where a patentee obtained two patents on the same day, upon applications filed on the same day, they could not be treated as one patent with two claims.

It was again cited by this Court in the recent Milburn case, 270 U. S., 390, 401, where this Court decided that an earlier filed application describing the invention, but not claiming it established priority, but the case was only cited on the proposition that the publication in a patent of an unclaimed invention was a dedication to the public of the invention not claimed.

It has also been cited by Judge Lacombe in the New York Circuit Court in Writing Company vs. Elliott Co., 106 Fed. Rep., 507, 508, on the proposition that as against a later numbered patent issued on the same day, the earlier numbered patent is none the less "earlier" and is to be taken as a part of the prior art.

Again, in the Second Circuit Court of Appeals the case was cited in Doig vs. Morgan Machine Co., 122 Fed. Rep., 460, 462, in support of the proposition that where suit is brought on a later patent, an earlier patent to the same patentee is prior art, but in this case the two patents were not issued on the same day. It has also been cited in Guthrie vs. Curlett, 10 Fed. (2d), 725, 726, in the Second Circuit to the effect that a patent must disclose a new and useful art, machine, manufacture or composition of matter and must claim the invention.

The doctrine of Ex parte McNeil, supra, 20 App. D. C., 294, which serves as a guide to the Commissioner of Patents in the allowance of patent applications, and which bears a close relation to the issues here has not been in terms approved by this Court, nor the principle as announced in Langen vs. Warren Axle Co., supra, 184 Fed. Rep., 720.

It is respectfully submitted that the instant case is one of great gravity and importance not only with respect to the petitioners, but also with respect to vital interests of

the public. When we consider that there are some 7,000,000 innocent car owners who have purchased their cars free [fol. 185] from monopoly of the Bassick Company patents, who become infringers of this Gullborg patent when they make use of any old and non-patented grease gun for lubrication of their cars, the far-reaching results of this decision are apparent.

The component parts of the Alemite System are tools which comprise a grease gun, coupling member, and a series of pin fittings on the various parts of the car requiring lubrication. The pin fittings are not a permanent part of the combination, but are attached to the bearings to be lubricated on the machine or automobile and become a permanent part of the automobile structure.

Only one grease gun and coupler is used for each machine. The Bassick Company makes a contract with the automobile manufacturer to equip all of its cars with pin fittings, and it furnishes a grease gun and coupling for each car.

The owner of the car is the only one who puts the device together, and completes the combination.

The 14th and 15th claims of the Gullborg patent have been so broadly construed that this decision prohibits the use of any old unpatented grease gun for use in the lubrication equipped with the pin fittings of the Gullborg patent, and it denies the right of the owner of the car equipped with the pin fittings to drive to a public garage and have his car lubricated with a grease gun not purchased from the Bassick Company.

It is not intended to suggest that a patent which creates a monopoly on the use of certain tools should be held of no effect merely because the public is affected by such results; but it is respectfully submitted when such is the result and large numbers of people are affected thereby, the public interests require that so broad a construction be given to the patent only after a judicial examination which leaves no doubt as to the correctness of such construction.

Respectfully submitted, Alfred M. Allen, Counsel for Petitioners. Wellmore B. Turner, Counsel for Petitioners.

[fol. 186] (Cover)

SUPREME COURT OF THE UNITED STATES

October Term, A. D. 1927

No. 442

THE O. K. MANUFACTURING COMPANY, Petitioner

v.

THE BASSICK MANUFACTURING COMPANY, Respondent

No. 443

THE LARKIN AUTOMOTIVE PARTS COMPANY, Petioner

v.

THE BASSICK MANUFACTURING COMPANY, Respondent

Reply Brief of Petitioners to Respondent's Brief in Opposition to the Petition

Alfred M. Allen, Wellmore B. Turner, Counsel for the Petitioners.

[fol. 187] SUPREME COURT OF THE UNITED STATES

October Term, A. D. 1927

No. 442

THE O. K. MANUFACTURING COMPANY, Petitioner

v.

THE BASSICK MANUFACTURING COMPANY, Respondent

No. 443

THE LARKIN AUTOMOTIVE PARTS COMPANY, Petioner

v.

THE BASSICK MANUFACTURING COMPANY, Respondent

REPLY BRIEF OF PETITIONERS TO RESPONDENT'S BRIEF IN OPPOSITION TO THE PETITION

Respondents assert that petitioners are asking the Supreme Court to assume jurisdiction upon an issue not pleaded, tried or argued in the lower Court.

In this assertion respondents are in error. The pleadings show, that in both the O. K. and Larkin cases suit was

brought on the Gullborg patent #1,370,734 (O. K. Record, p. 2, Larkin Record, p. 2); that in the answer in the O. K. case the Gullborg patent #1,370,733 was pleaded as containing a disclosure of the invention of Gullborg patent #1,307,734 (O. K. Rec., pp. 11, 14), and that the same defense was made in the answer in the Larkin case (Larkin Rec., pp. 8, 9). The record also discloses that in the Larkin case the Gullborg patent #1,307,733 was offered in evidence (Larkin Rec., p. 95) and referred to by petitioners expert (Larkin Rec., pp. 127, 128, XQ 27 and 31).

In the O. K. case the testimony in the Larkin case was by stipuation to be used in the O. K. case (O. K. Rec., p. 102). The two patents were therefore before the Court below, and the question whether the invention of Gullborg patent #1,307,734 was not disclosed in Gullborg #1,307,733 was directly in issue. This issue was directly decided by the Court of Appeals of the Sixth Circuit: "It follows [fol. 188] that claims 14 and 15 are valid." (O. K. Rec., p. 337, Larkin Rec., p. 450.)

The second contention of respondent's brief is that the issue raised in the petitions for the writs of certiorari is an issue of "double patenting" which should have been pleaded.

Here again respondents are in error. There is no issue of "double patenting" raised by the petitions for the writs of certiorari. The only issue is that of non-invention. It is not contended that patent #1,307,734 is the same as patent #1,307,733. The contention is that there is no invention in claims 14 and 15 of patent #1,307,734 in view of #1,307,733, the issue properly raised by the pleadings as above set forth.

This misunderstanding of our position probably arose from the fact that at the top of page 7 of the brief on the petition we referred to Miller v. Eagle, 151 U. S. 186, as being cited by this Court in Underwood v. Gerber. This was obviously an error as the latter case was decided at a previous term. The Court, however, in Miller v. Eagle did cite Underwood v. Gerber to the effect that two patents issued on the same day could not be treated as one patent with two claims.

As pointed out in our brief on the petition, the true doctrine of Underwood v. Gerber is that there can be no invention in an old combination of parts by the substitution in the old combination of an improvement which involves

solely one of the parts if no new result is accomplished by the substitution. If the invention is in one of the parts, then the patent should be for the new thing and any subsequent patent, even issued on the same day for the old combination, is void for lack of invention. It is this doctrine that so largely governs the administration of the Patent Office as defined in Ex parte McNeil, 20 App. D. C. 294, and we submit that this principle should be reaffirmed and reestablished to prevent further confusion and uncertainty.

The exact question presented by the petition for the writ of certiorari was at issue in the pleadings and evidence, and was presented to the Court of Appeals of the Sixth Circuit on the petition for rehearing, to which petition the respondent filed an answer and brief in opposition in which the questions here presented were argued at length, upon consideration of which the Court of Appeals reaffirmed its original finding that claims 14 and 15 of Gullborg #1,307,734 were valid.

Certainly the present application comes clearly within [fols. 189 & 190] the terms of Sec. 240 of the Judicial Code under which this cause may be ordered to be certified to the Supreme Court for determination.

Respectfully submitted, Alfred M. Allen, Welmore B. Turner, Counsel for the Petitioners.

PLAINTIFF'S EXHIBIT M

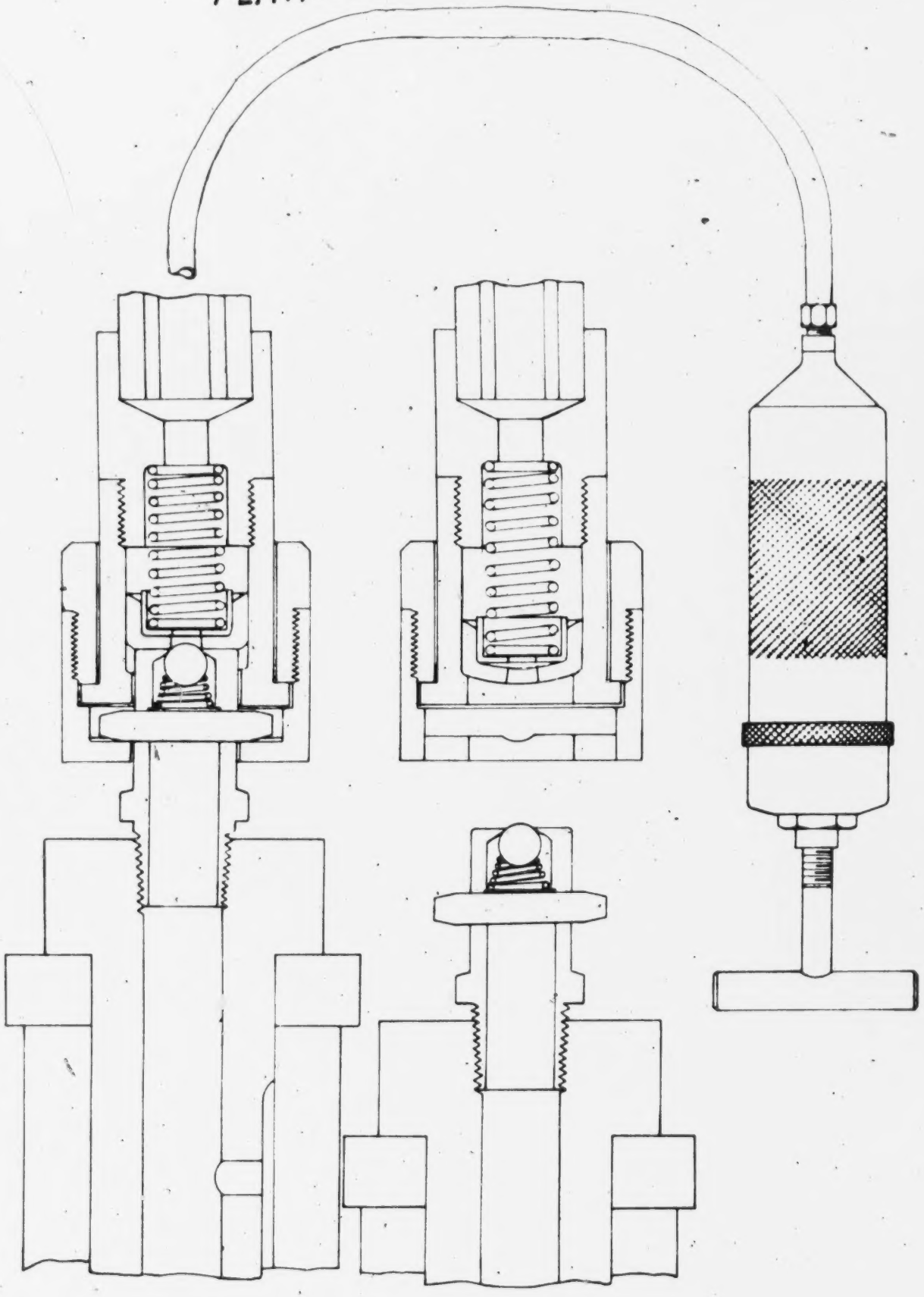

GJT

EXHIBIT U. AHLBERG AFFIDAVIT
J. LINDLEY'S ORDER OF MAY 27 - '27

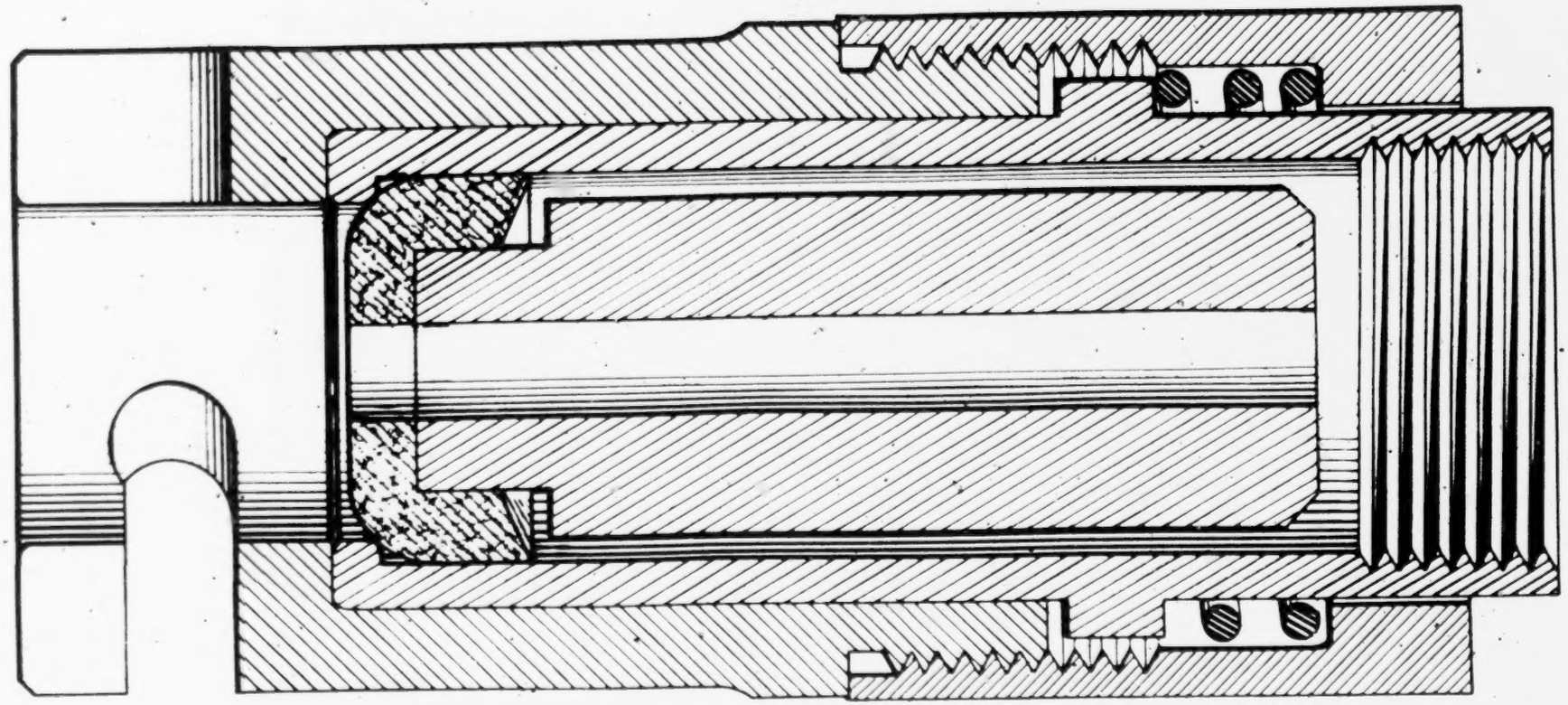

PLAINTIFF'S EXHIBIT O-3

EXHIBIT V. AHLBERG'S AFFIDAVIT
J. LINDLEY'S ORDER OF MAY 27, 1927

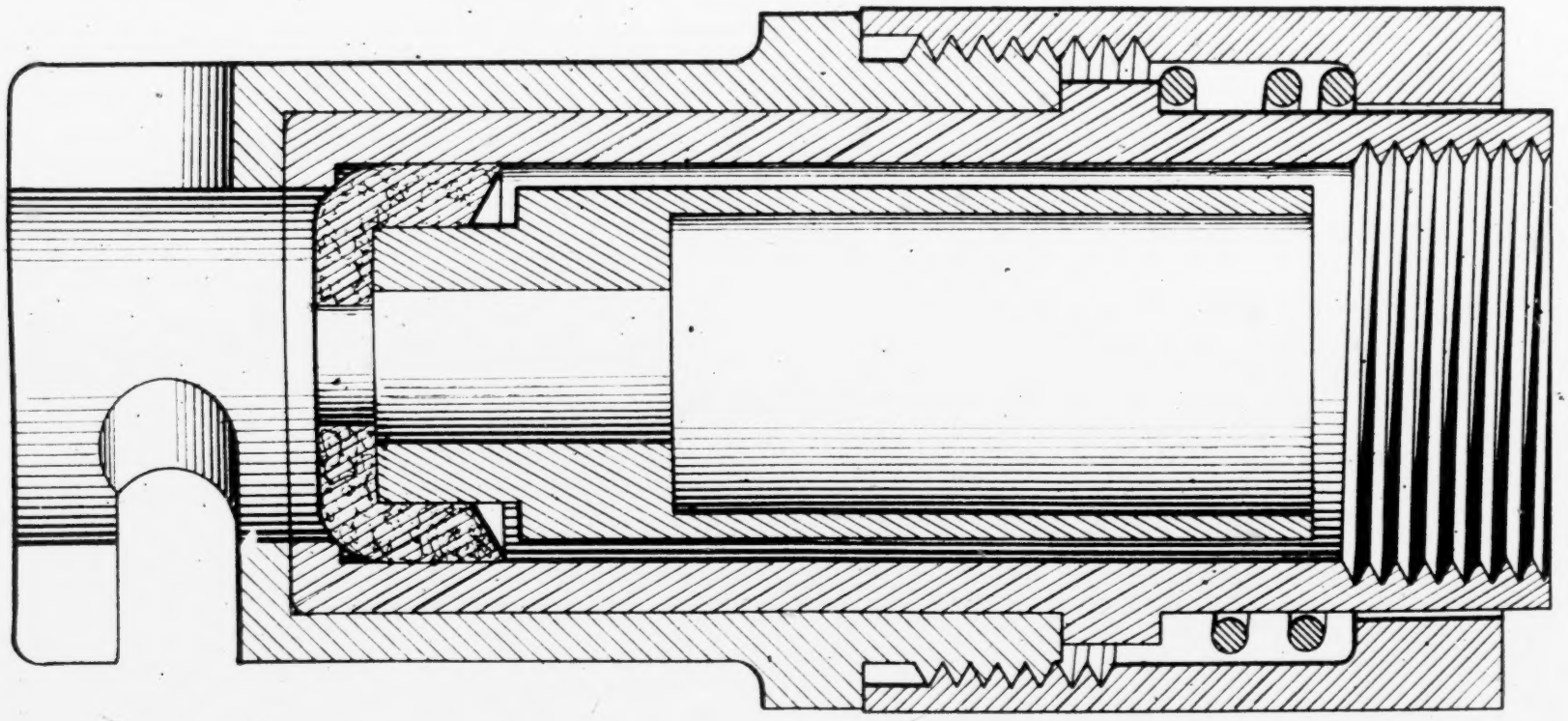

PLAINTIFF'S EXHIBIT O-4
193

PLAINTIFF'S EXHIBIT O-6

EXHIBIT G. SAMITOSKI AFFIDAVIT
J. LINDLEY'S ORDER OF MAY 27-1927

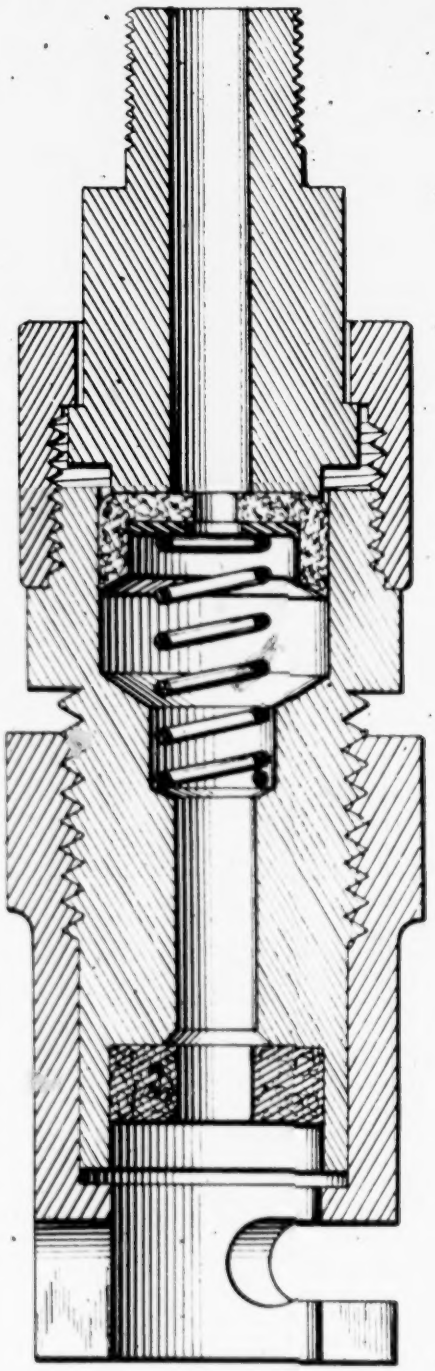

PLAINTIFF'S EXHIBIT Q

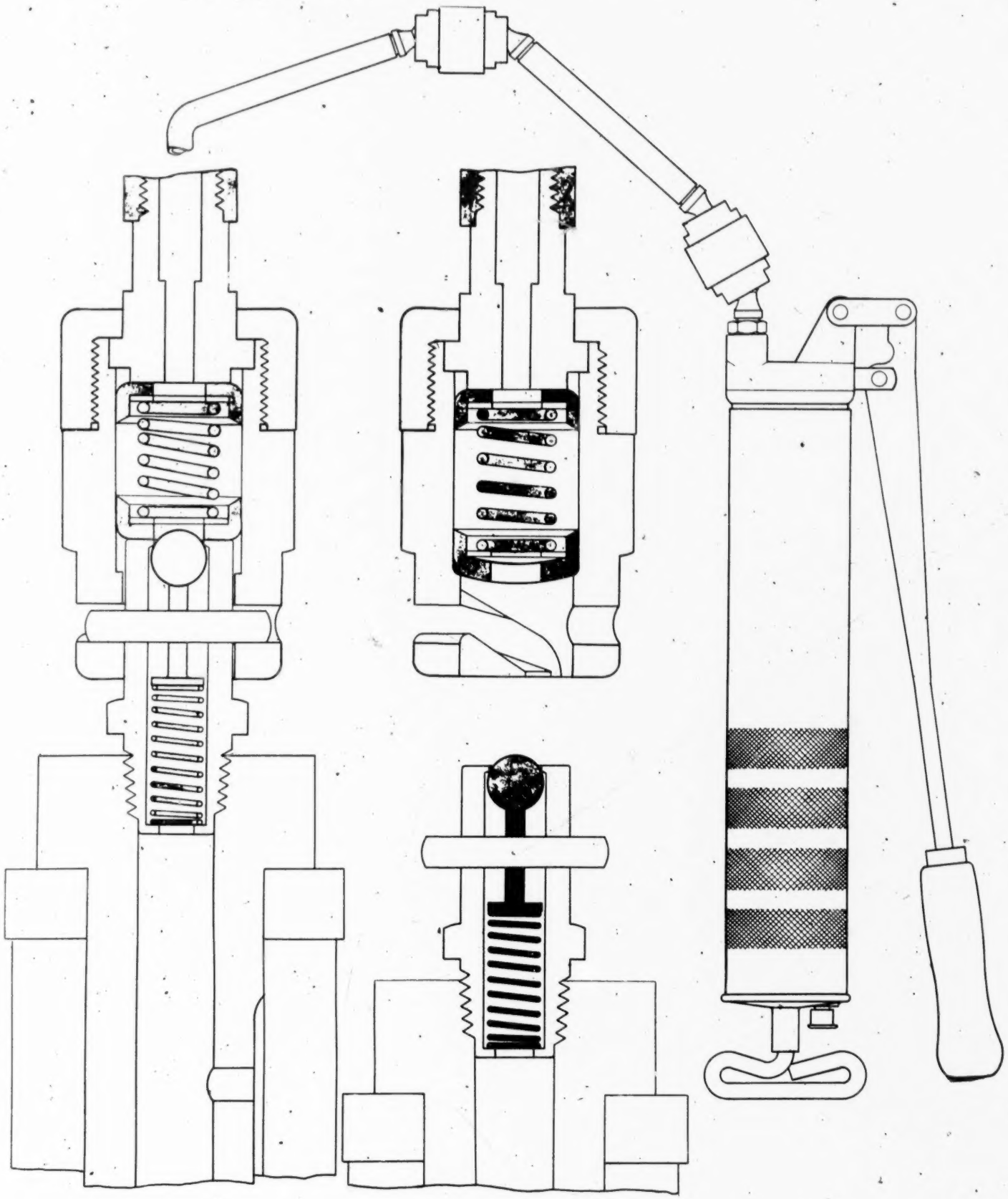

PLAINTIFF'S EXHIBIT AA

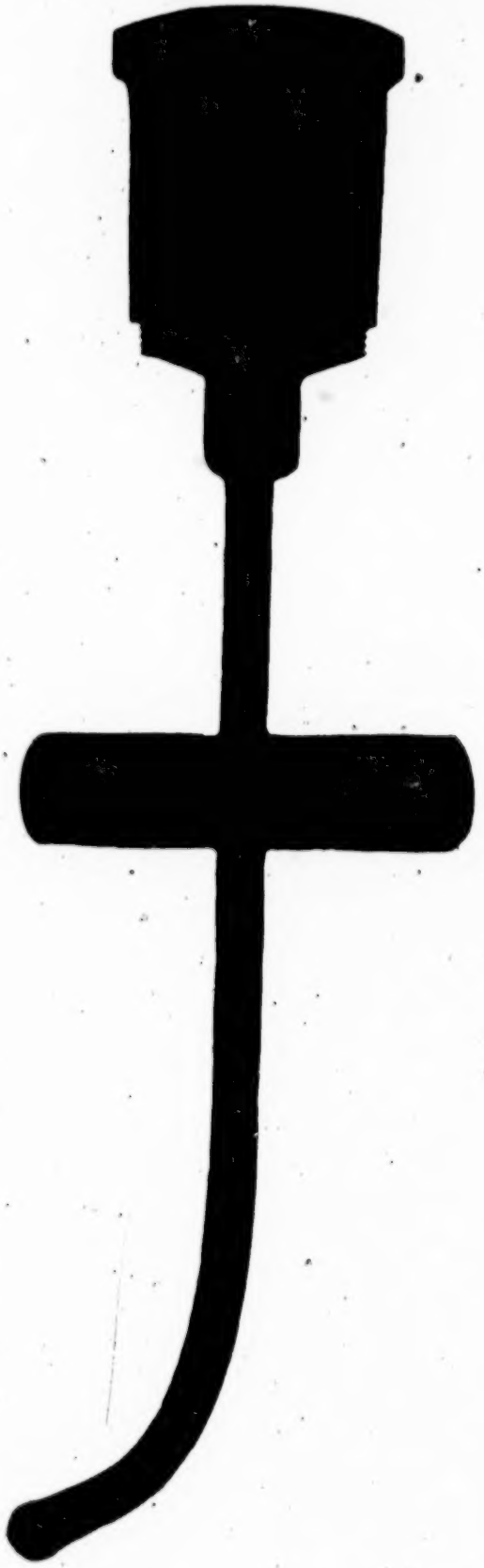

PLAINTIFF'S
EXHIBIT BB

Fig. 1.

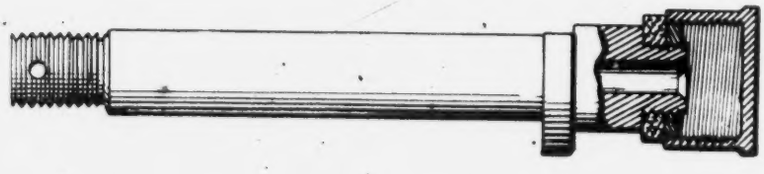

Fig. 2.

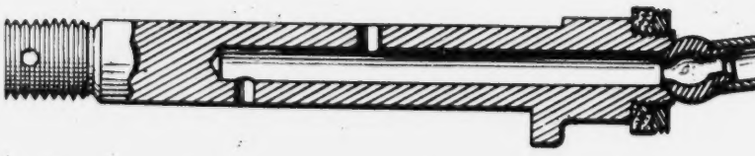

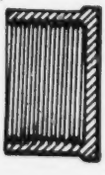

[fol. 199] IN UNITED STATES DISTRICT COURT

Statement of Evidence

TESTIMONY ON BEHALF OF DEFENDANT TAKEN BY DEPOSITION UNDER R. S. 863 AND CONDENSED PURSUANT TO EQUITY RULE 75—Filed Dec. 31, 1928

HUGO C. GIBSON, called as defendant's mechanical expert witness, testified that:

His age is 53, his occupation is Consulting Engineer; and he resides in Philadelphia, Pa.

Mr. Gibson gave as his qualifications, briefly:—technical education at the City and Guilds of London, Technical Institutes at Finsbury, London, England, and after completing his course at that college he associated with various engineering concerns in the manufacturing and installation of various classes of machinery including gas engines, electric light and power machinery, and complete installations of electric light and power machinery, and complete installations of electric light and power including the prime movers. He was engaged as manager of manufacturers of electrical apparatus and also operated in connection with the manufacture of sewing machines, etc. In about 1890 he built and operated automobiles in England; and since 1906 in the United States he has acted as Consulting Engineer in automotive matters for various automobile manufacturers, including the Matheson Motor Car Co. of Wilkes-Barre, Pa.; Velie Motor Co. of Moline, Ill., and others; and he was for some time Chief Engineer of the R. & V. Motor Co. of East Moline, Ill., manufacturing automobiles and Knight sleeve valve engines. He is associate member of the Institution of Electrical Engineers; and member of the Society of Automotive Engineers.

Mr. Gibson then stated that he is familiar with the disclosure of the Gullborg patent No. 1,307,734 in suit, and described briefly the main mechanical devices shown in the drawing and described in the specification of that patent, as comprising a pump acting as a grease receptacle and provided with a piston with a screw threaded shaft and handle for operating the piston, whereby pressure may be put upon

grease, tending to force it out of the pump; a flexible hose attached to the exit of the pump and at the other end of the flexible hose a coupling device having a bayonet slot. A grease cup, nipple or fitting having a screw thread at one end permitting that fitting to be attached to a bearing of a machine, provided with a pin or peg passing through the barrel or body of the fitting, for the purpose of completing [fol. 200] a bayonet arrangement for coupling the coupler to the fitting and also for the purpose of supporting one end of a spring, the other end of which spring presses against a ball, which ball serves to close the end of the fitting, as a check valve. The relation of the coupler of Figures 1 and 2 with the fitting of Figures 3, 4, 8 and 9 is shown in Figure 5 where the coupler is assembled to the fitting, and both are shown in section. Figure 7 shows a method of attaching the fitting to one end of a hose whereby lubricant fed to the fitting may be carried through the hose to some distant bearing. Figure 6 shows part of the chassis of an automobile with a number of places indicated thereon where the fittings may be placed, whereby the pump, hose and coupler shown in Figure 1 may be attached to those fittings, and so the bearings to which those fittings are related may be lubricated by the operation of the grease pump.

Mr. Gibson stated that he is familiar with the commercial practices in lubricating automobiles and that the portable pump, hose and coupler shown in Figure 1 of the drawing of the Gullborg patent in suit, are generally referred to in the trade, for short, as the "compressor."

Mr. Gibson then stated that in bayonet couplings or connections which have been in use for coupling either rods or conduits together, ever since the beginning of mechanical engineering, have had two parts; one, the male part and the other, the female. The male part is usually provided with one or more pegs, lugs or projections from the side of its body; while the female part is provided in its shell with slots arranged at various angles to the axis of the female part, of such size and shape as will accommodate the shape of the pins, lugs or projections of the male part and usually so arranged that when the female part is placed upon the male part and the pins of the male part engage with the slots of the female part, the rotation of the female part

will cause the pins to slide axially along the inclined plane of the slots of the female part and so bring the two parts of the coupling forcibly together for the purpose of either holding rods tightly united to one another or for holding the end of a hose tightly to the end of another hose and prevent leakage of the liquid carried through the hose, and for other purposes of similar character.

The Gullborg coupling as is particularly detailed in section in Figure 2 of the Gullborg patent, is provided within its bore which is specially enlarged for a distance, with a flexible, cup-shaped washer having a hole or perforation in the disc part of that washer; this washer being so placed [fol. 201] that its cylindrical wall is in contact with the wall of the enlarged bore of the coupler. There is a spring pressing against the inner face of the disc of the cup washer and the bore in which the cup washer fits being enlarged, as stated, has necessarily a shoulder against which the cup washer is pressed by the action of the spring. That spring has an abutment provided so that it may press upon the washer and that abutment is formed by the end of the hose which is solidly fastened to the body of the coupler. The mouth of the coupler is provided with the bayonet slots. The fitting or grease cup which co-operates with this coupler is shown in detail section in Figure 4 of the Gullborg patent and consists of a body or shell having at one end a screw thread, whereby the fitting may be screwed into the body of a bearing, housing or journal box and be left permanently therein. At the other end of the body or shell the wall is turned inwardly to form a seat for a ball forming a check valve. The ball is pressed against that seat by means of a spring and that spring abuts against the approximate center of a pin passing through the body of the fitting, which pin has the projecting ends which appear outside of the body of the fitting and forms the male portion of the bayonet joint.

In lines 59 to 102 of page 2 of the specification of the Gullborg patent, it is stated that in the act of uncoupling the female coupler from the fitting a movement of the cup washer (being spring pressed within the coupler) would cause a small quantity of lubricant to be forced into the male fitting part, and that a further movement of uncoupling would cause that cup washer to move outwardly

toward the mouth of the coupler and thereby produce a slight vacuum which, it is there said, causes any grease which might remain on the male fitting to be sucked back behind the cup washer, thereby cleaning the male fitting of excess grease.

The mechanical theory behind this function of Gullborg's coupler construction is that if a piston is moved in a cylinder, some change of pressure must take place; that a change of volume must take place and it is apparently assumed by this inventor that such an action will take place in the operation of his device whereby, so he says, a vacuum would be produced which would cleanse the fitting of any excess grease which might tend to remain on that fitting.

In the actual operation of compressors of this kind, very high pressures are generated in the hose and coupler. In fact, anywhere from 500 to 10,000 pounds per square inch [fol. 202] may be developed. This statement is based upon the fact that hydraulic methods, which is the principle upon which these devices operate, easily render it possible to produce such pressures; not only the compressor of the Gullborg patent, but other compressors which will develop much higher pressures than could be obtained by the hand screw method of the Gullborg patent compressor.

Considering the normal operation of the particular compressor shown in the Gullborg drawing, there could be no such self-cleansing action inasmuch as, while there is provided in this coupler device a very small cup washer arranged to reciprocate within the coupler body, yet if that cup washer does so reciprocate the total change of volume that could be produced by that movement would be incapable of producing a vacuum at any point within the apparatus to offset the pressures which are existing throughout the apparatus. Consequently, vacuum being only a condition of pressure, the net result of the use of the apparatus is always pressure and not vacuum, even when used in the manner indicated in the specification of the Gullborg patent.

Assuming that the spring-pressed, slideably mounted cup washer in the Gullborg coupling were in fact capable of producing the suction described in the specification and the resultant self-cleansing action, it would be essential that the lubricant, the grease within the lubricating apparatus, should be under no pressure, in order that any indication

whatever of a tendency to create a vacuum such as the inventor Gullborg theorized upon, should be observable.

There is no means whatever disclosed in the specification, nor are there any directions in the specification of the Gullborg patent which would teach or instruct how to relieve the pressure of the grease before uncoupling so that the coupler function may properly result.

In order to operate the compressor shown in Figure 1 of the Gullborg drawing, in a manner most favorable to the creation of the suction in the Gullborg coupler referred to in the specification, one would be compelled to introduce some new apparatus or new actions, or something other than is indicated in the Gullborg patent, and one of these might be the addition of a stop cock, the opening of which would release the pressure from within the apparatus; or it would be possible to relieve the pressure to some extent by retracting the piston of the pump of Figure 1 by unscrewing the handle.

The specification of the Gullborg patent does not instruct [fol. 203] the user to back off the piston of the pump prior to uncoupling, in order to allow the coupler to produce the suction referred to.

Considering the various elements of claim 8, the

"apparatus having a part to be lubricated"

recited as an element of claim 8 of the Gullborg patent in suit is nothing other than the automobile chassis shown in Figure 6 of the Gullborg's patent drawing on which there are a number of bearings to be lubricated.

The

"conduit for conducting lubricant to said part"

recited as an element of claim 8, is the passage through the metal housing of the bearing which requires lubrication, or is a conduit from one part of the automobile chassis to the part to be lubricated, and is referred to by the reference numeral 38 in Figure 6.

The

"coupling member screwed to the end of said conduit and provided with a spring-pressed valve closure"

recited as an element of claim 8, is the male grease cup or "fitting" shown in Figures 3, 4, 5, 7, 8 and 9 of the Gullborg patent drawing. That coupling member is

screwed to the end of the various conduits of the automobile chassis of Figure 6 and is provided with a spring-pressed closure.

The

"means for supplying lubricant to said conduit comprising a receptable provided with a discharge outlet"

forming part of claim 8, are shown as a whole in Figure 1 and comprise a receptacle 15, and a discharge outlet which may be anywhere along the hose 19.

The

"second coupling member connected with said discharge outlet"

is the coupler 21 of Figure 1 of the Gullborg drawing.

The

[fol. 204] "means for detachably uniting said coupling members"

forming part of claim 8, are the bayonet slots of the coupler 21, identified by the numerals 22 and 23, and the pins 31 of the male member 29.

The

"means for sealing the joint between said coupling member and for removing excess lubricant from the adjacent ends thereof when said coupling members are uncoupled"

forming part of claim 8, is the cup-shaped washer shown in Figures 2 and 5 and identified by the numeral 26.

Q. 27. What other mechanical elements shown in Figures 2 and 5 outside of the cup washer would also constitute means for removing excess lubricant?

By Mr. Hansmann: The question is objected to as suggesting an answer.

By Mr. Kalish: I will let the question stand and ask the witness to answer that.

A. The spring 27 which presses upon the cup washer 26, to which I should have referred in my last answer.

The term

"apparatus having a part to be lubricated"

forming the first part of claim 8, may comprehend any apparatus having a part to be lubricated such as journals

of an engine shaft, bearings of a grindstone, or in fact any piece of machinery where it is desirable to reduce the friction of the bearing.

Gullborg Patent No. 1,307,734 in suit is offered in evidence as Defendant's Exhibit No. 1.

Mr. Gibson was handed a piece of apparatus and stated that this apparatus consists of a container for holding lubricant, in the form of a cylinder having a piston and a plain piston rod and handle, a brush clutch upon the piston rod; the piston rod passing through a cover placed at one end of the cylinder. The piece of apparatus is a "compressor" for lubricating parts of machinery and on the cover of the lubricant receptacle member appear the words: [fol. 205]—"Whiz High Pressure Grease Gun No. 20, R. M. Hollingshead Co., Camden, N. J."

This apparatus consists mainly of a grease receptacle, a lever piston pump, a check valve, a flexible hose and the coupler on the end of the hose.

The receptacle is in the form of a cylinder having cylinder covers, through one of which a piston rod projects having a piston on its end within the cylinder. At the other end of that cylinder and within the cover of that end, is a piston type force pump having a hand lever for its operation, and on the discharge end of that force pump appears a check valve, the operation of the pump as a whole being that the pump piston operated by the hand lever will draw grease or lubricant from the receptacle and discharge it past the check valve, this check valve being essential to the operation of the lever pump which would be incapable of operation without that check valve. The piston and rod are a following-up device to aid in furnishing the supply of grease to the lever pump piston. The pressure developed by this pump is produced by the operation of the hand lever piston.

The pump would not operate without that check valve on its discharge end. It would be simply incapable of operation without it because that small pump piston depends for its supply of grease upon the closure of the discharge orifice. If that discharge orifice were not automatically closed by a check valve during the retracting motion of the piston, the charging motion of the piston, there would be no movement of lubricant grease from the receptacle to the cylinder of the hand lever pump. Con-

sequently, that pump would be incapable of delivering grease at the desired pressure.

If the check valve were removed and the pump piston operated, then, upon the charging stroke, that is, upon the withdrawal of the piston outwardly from its cylinder, there would be no vacuum created within the pump cylinder because that vacuum would be satisfied by the ingress of air, grease, or what not, through the passage which should be occupied and closed by the check valve. The check valve having closed that orifice then the vacuum produced by the retraction of the piston will draw the grease from the receptacle into the cylinder, wherefrom it is again ejected past the check valve by the return of the piston.

There is no means whatever for relieving the pressure of the grease in the hose or coupler in this apparatus (marked: —Whiz High Pressure Grease Gun No. 20, R. M. Hollings-[fol. 206] head Co., Camden, N. J.) because the check valve at the discharge orifice of the pump automatically prevents any possibility of relieving the pressure in the hose, and there are no means provided at all for that purpose. It would be impossible to relieve the pressure in the hose and coupler by any operation of retracting the piston of the hand lever pump or the follower piston of the receptacle; any movement of either of those pistons would have no effect whatever upon the pressure in the hose and coupler, due to the presence of the check valve.

The sample of defendant's hand compressor was offered in evidence as Defendant's Exhibit No. 6, and the pump designated as No. 6-A, the flexible metallic hose as No. 6-B, and the bayonet coupler on the end of the hose as No. 6-C; all forming parts of the Defendant's hand compressor, Exhibit No. 6.

Mr. Gibson was handed a flexible metallic hose having on the end of it a bayonet coupler bearing the inscription: —"Alemite, Made in U. S. A., Patented 6-24-19, 1-18-21 and 1-25-21, Pat's. Pdg."

The coupler contains a spring-pressed, slidably mounted cup washer which is adapted to seal against a grease cup to which it may be attached. This coupler, therefore, generally conforms to the coupler construction disclosed in the Gullborg patent in suit insofar as it is provided with the spring-pressed cup washer.

The spring-pressed cup washer in the device last handed to Mr. Gibson, would act as described in Gullborg's patent with regard to its movements insofar as any production of vacuum and cleansing action is concerned.

No self cleansing result or function can be produced by defendant's reciprocating type of pump (Exhibit No. 6-A) having the check valve at its discharge outlet, even if this pump is equipped with the Alemite hose and bayonet coupler instead of defendant's hose and bayonet coupler (Exhibits Nos. 6-B and 6-C) and the pump then operated by attachment in the only manner in which it can be operated upon attachment to an Alemite grease cup or fitting (Defendant's Exhibit No. 5).

Defendant's pump (Defendant's Exhibit No. 6-A) would be incapable of any such vacuum or self cleansing function in the coupler on account of the presence of the check valve [fol. 207] which is essential to the operation of the pump.

If the check valve is removed from defendant's pump (Defendant's Exhibit No. 6-A) the pump will be inoperative and incapable of performing the function of lubricating a bearing.

The defendant's reciprocating type of hand pump (Defendant's Exhibit No. 6-A) equipped with the Alemite hose and Alemite bayonet coupler was then attached by Mr. Gibson to a grease cup affixed to a spring bearing and the pump operated, forcing lubricant into the bearing; the grease cup having been first cleaned exteriorly of all grease, and the Alemite coupler having been first cleansed exteriorly and also interiorly as far as the sealing washer.

The reciprocatory piston of defendant's hand type pump (Defendant's Exhibit 6-A) was then retracted or withdrawn to its outermost limit and the Alemite bayonet coupler uncoupled from the Alemite grease cup.

Upon uncoupling, a considerable quantity of grease excluded from the connection and distributed itself about the grease cup and coupler.

The suctional function of the Gullborg coupler is limited to a type of pump which is so constructed, that the pressure produced by the pump during the act of lubrication can be entirely relieved prior to uncoupling from the grease cup, so that the cup washer of the Gullborg coupler may have an opportunity to function in a manner described in the Gullborg patent.

The Alemite hose and the Alemite coupler were offered in evidence as Defendant's Exhibits Nos. 7B and 7C.

Defendant's large Service "Compressor" was next submitted to Mr. Gibson. This service Compressor bears a label with the inscription:

"Whiz high pressure chassis lubricant, the R. M. Hollingshead Co., Camden, N. J., U. S. A."

this apparatus consists of a tank containing lubricant arranged for the application of air pressure for forcing lubricant out of the tank when required. A shut-off valve on the tank and a hose extending from the valve; a lever piston type on the end of the hose; a flexible metallic hose leading from the pump, and a coupler on the end of the flexible [fol. 208] metallic hose. This apparatus in its entirety is referred to as a "compressor".

This last compressor is generally distinguished in the trade from the defendant's first compressor (Defendant's Exhibit No. 6) as a "Service" or "Garage type compressor", while the other is a portable or hand type compressor.

In the defendant's service compressor the lubricant contained in the tank is forced through the first hose to the lever piston type pump on the end of the hose by the air pressure in the tank, which is mounted at about 100 pounds per square inch.

Without the air pressure the lever piston pump on the end of the first hose would not operate because no lubricant would be supplied to it.

The air is supplied to the tank through a suitable valve similar to the valves used on automobile tires, and in a manner similar to placing air in tires.

The defendant's service compressor was then applied to an Alemite grease cup or fitting fixed to a spring bearing, by the attachment of the coupler of defendant's service compressor to said Alemite grease cup and the compressor was operated, forcing grease into and through the bearing.

Upon uncoupling, a considerable quantity of lubricant was found both on the fitting or grease cup and in and around the coupler.

This lubricating operation was repeated after the grease cup and coupler were cleansed of grease, and upon uncoupling, grease was found again both upon the fitting or grease cup and upon the coupler.

The lubricating operation was again repeated with the fitting or grease cup and coupler cleansed, and prior to disconnecting the coupler from the grease cup, and the piston of the pump or compressor unit was retracted. Upon disconnecting the coupler from the grease cup the grease exuded and continued to exude from the coupler and deposited itself freely on the grease cup and elsewhere.

This last result is due to the fact that in defendant's "service" type "compressor" the lubricant is supplied or fed to the hand lever pump by the air pressure in the tank and the piston of the hand lever pump acts as a valve which shuts off the flow of lubricant from the tank when the piston is fully depressed. When the piston is retracted the air pressure in the tank can force the grease or lubricant [fol. 209] through the pump and through and from the coupler.

There is no means in defendant's "service" type "compressor" for relieving the pressure in the coupler just prior to uncoupling the same from the grease cup. The piston of the pump of the compressor cannot be used for this purpose because as stated before, the withdrawal of the piston permits an unrestricted flow of lubricant from the discharge end of the coupler.

Defendant's Service Compressor was offered in evidence as Defendant's Exhibit No. 8 and the parts thereof separately designated as:

The Pump as 8A;
Flexible Metallic Hose as 8B;
The Bayonet Coupler on the end of the metallic hose 8C;
The lubricant reservoir tank 8D;
The fabric hose connecting the tank with the pump as 8E.

The flexible metallic hose 8B and bayonet coupler 8C of defendant's service compressor (Defendant's Exhibit No. 8) when detached from the pump of said compressor and the Alemite hose and Alemite coupler of defendant's Exhibit No. 7 were substantially in their place by attachment to the pump of defendant's service compressor. The Alemite coupler was clearned and was connected on the Alemite grease cup also cleaned, and the pump operated, forcing the lubricant into the bearing.

Upon disconnecting the Alemite coupler from the Alemite grease cup a considerable amount of grease adhered to the grease cup and coupler.

The reason why there was a free exudation of grease upon uncoupling the Alemite coupler of the Gullborg construction from the Alemite grease cup, and why the grease was not removed from the grease cup or cleansed as mentioned in the Gullborg specification, is because the vacuum produced by the cup washer of the Gullborg-Alemite coupler is not sufficient to offset the pressure within the conduit.

There is no means in his apparatus, even when provided with the Gullborg coupler to relieve the pressure and of producing a vacuum.

The Gullborg coupler construction, such as the Alemite coupler, would not be capable of producing the function and result ascribed to it by Gullborg with a pump and [fol. 210] equipment of the type exemplified by defendant's Exhibit No. 8-A, for the reason hereinabove stated.

Screw type of pump bearing the inscription:

"Alemite lubricator, manufactured by the Bassick Mfg. Co. Chicago, Ill. Pat'd 6-10-19; 6-24-19; 2-26-24, Pats. Pend."

was handed to Mr. Gibson and the Alemite hose and coupler of defendant's Exhibits 6B and 6C were attached to this pump, and Mr. Gibson found that this combination of apparatus was substantially the same as and aptly represents and is practically identical with the portable compressor including the pump, hose and coupler shown in Figure 1 of the Gullborg patent drawing, and contains all the material structural elements of the compressor shown in Figure 1 of the Gullborg patent.

The Alemite screw type of hand pump was offered in evidence as defendant's Exhibit No. 7A.

The Alemite pump, Alemite hose and Alemite coupler were then operated by the attachment to the Alemite grease cup; the coupler and grease cup having been first thoroughly cleaned of grease. The pump was operated until the grease exuded from the bearing to which the grease cup was attached, and upon uncoupling the coupler from the grease cup a great quantity of grease exuded from the coupler and lodged itself all over the fitting or grease cup.

This was due to the pressure existing at the time of uncoupling and the absence of vacuum, since grease could not exude except under pressure.

The lubricating operation with the Alemite pump, Alemite hose and Alemite coupler was repeated until the grease again exuded from the bearing. Thereafter the piston of the pump was retracted by unscrewing the pump handle several turns. The coupler was then readily detachable from the fitting or grease cup without difficulty and a certain amount of grease was found on the fitting.

The object of backing off the piston of the pump before uncoupling is to relieve the pressure from the coupling.

It is impossible in any way to relieve the pressure in either one of the defendant's compressors (Defendant's Exhibit No. 6 and 8), as has been done with the Alemite pump.

In backing off the piston of the Alemite pump there [fol. 211] is no way in which any one can ascertain when the piston has been retracted just sufficiently to relieve the pressure or to establish the normal atmospheric pressure in the pump. That is purely a matter of guess work. When the piston of the pump is retracted beyond the point necessary to relieve the pressure or to reduce the pressure to normal atmospheric pressure, a slight vacuum is produced within the barrel of the pump, also in the hose and coupler.

If the piston of the Alemite pump is retracted and more than is necessary merely to relieve the pressure of the pump to atmospheric pressure there is no way of determining whether the result or condition with the fitting, or coupler when uncoupled is due to the suction produced by the movement of the cup shaped sealing washer within the Alemite coupler or whether it is due to the suction created by the retraction of the piston of the pump.

There is no doubt whatever that the vacuum produced by backing off the piston of the pump is conducive of a very large degree to the cleansing of the fitting.

The defendant's coupler 6C forming part of defendant's Exhibit 6 comprises an inner body which forms the terminal of the house, and contains a washer at its free end which is in fixed relation to said inner body. The inner body has a shoulder upon its outer service forming a spring abutment, and the other end of the spring is engaged by the flange of one part of an outer shell.

This outer shell is formed of two parts arranged to be secured together to form a solid shell, the spring presses against a flange of the shell in such a manner as to move the outer shell upon the inner body of the hose. The outer end of the outer shell is bored out so as to expose the washer which is fixed to the inner body and the shell is furnished with bayonet slots. By the arrangement of flanges, collars and a spring, the outer shell can move longitudinally from the inner body to a limited extent. At the hose end of the coupler is a screw thread adapted for the attachment of the hose.

A drawing was submitted by Mr. Gibson who stated that it correctly represents the construction of the defendant's coupler (Defendant's Exhibit No. 6C).

The drawing was identified and was offered in evidence as Defendant's Exhibit No. 9.

[fol. 212] To demonstrate the existence or non-existence of a slight degree of vacuum in the Gullborg coupler construction during the act of uncoupling the same from the grease cup, Mr. Gibson used the Alemite pump of Defendant's Exhibit No. 7-A and an Alemite hose and bayonet coupler identical with the Alemite hose and coupler of Defendant's Exhibit Nos. 7-B and 7-C respectively; the coupler, however, having a shut-off valve and nozzle inserted into the shell thereof adapted to receive a rubber hose. The other end of the rubber hose was attached to a U-tube or manometer containing water, for the purpose of showing delicate variations in pressure conditions. By this means a clear and continuous passage was provided from the interior of the Alemite coupler back of or behind the cup-shaped sealing gasket thereof and the indicating tube of the manometer, so that any vacuum or change of pressure or change of volume produced in the coupler during the uncoupling thereof from a grease cup will be indicated by movement of the column of water in the manometer tube.

Since the pressure of one pound per square inch on the surface of the water in the manometer tube will move the column of water a distance of about two feet, the indication of the manometer is very accurate and delicate.

In order to ascertain whether there was a clear passageway from within the Alemite coupler behind the cup-shaped washer thereof to the manometer, Mr. Gibson blew gently

upon the discharge end of the coupler and the change of the water level in the manometer of between ¼" and ½" or more indicated a clear passage from coupler to manometer.

Upon attaching the coupler to the grease cup (which was used in the earlier demonstrations) a slight degree of pressure was indicated by a quarter of an inch difference in level of the water columns in the manometer.

The manometer was then restored to its normal condition by opening an air vent provided for that purpose and the air vent was again closed.

The Alemite coupler was then uncoupled from the grease cup and a vacuum was indicated in the manometer by a three-eighth inch difference in level of the water columns.

The above experiment was repeated several times and in each case upon uncoupling the Alemite coupler from the grease cup a slight amount of vacuum was indicated by [fol. 213] the manometer by a variation of the level of the water approximately three-eights of an inch.

When the Gullborg apparatus as disclosed in the drawing and specification of the Gullborg patent is used merely as directed in the Gullborg patent, there is no practical vacuum present in the operation of the Gullborg coupler.

When the operation of lubrication is carried out as specified in the Gullborg patent there is necessarily a condition of high pressure within the body of the lubricant in the apparatus throughout, which condition of high pressure completely and entirely offsets and nullifies any effort that might be made by the Gullborg cup washer movement tending to the production of the theoretical cleansing vacuum.

A mechanical drawing was then submitted to the witness who identified it as a correct and clear representation of the apparatus which was used in performing the vacuum tests, and who stated that the coupler used in these tests is identical in construction with the Gullborg-Alemite coupler of Defendant's Exhibit No. 7C with the only addition of a stopcock inserted into the shell of the coupler for the purpose of demonstration, to provide a passage from the coupler to the hose of the manometer.

Figure 2 of the drawing, representing vacuum testing apparatus, is a true, correct and clear mechanical drawing of the second testing coupler and the stopcock attachment.

The drawing of the vacuum testing apparatus was offered in evidence as Defendant''s Exhibit No. 10.

The previous vacuum tests were then repeated, using the Alemite hand pump and a test coupler identical in construction with the coupler of Defendant's Exhibit No. 6-C having a stopcock inserted into the coupler to provide a passageway from the interior thereof to the manometer. The test coupler was then again tested for clear passage from the interior of the coupler to the water in the manometer tube by blowing gently upon the orifice of the coupler, as was done when testing the Alemite coupler.

The coupler was now coupled onto and uncoupled from an Alemite grease cup without any change in the water level of the manometer either during coupling or uncoupling, or during the whole operation. This was repeated four times without any indication of change of pressure. [fol. 214] The test coupler was then completely uncoupled from the grease cup and in order to prove the existence of a passage from within the coupler to the manometer and the capability of the manometer to register any change of pressure within the body of the coupler, Mr. Gibson blew gently upon the coupler with the result that the water in the manometer tube moved about ¼" to ⅜".

The foregoing tests with defendant's coupler were then repeated, using defendant's' hand pump of Defendant's Exhibit No. 6-A, with the same result that no change of pressure within defendant's coupler was indicated at any time. There is absolutely no possibility of production of a vacuum in this coupler of defendant's under any conditions, either during the act of uncoupling or otherwise, inasmuch as there is no possibility in the construction of this coupler for any change of volume in the conduit of which it forms a part.

The test coupler of defendant's coupler construction used in the last test was offered in evidence as Defendant's Exhibit No. 11.

A sealing gasket or member of defendant's coupler illustrated in the drawing of Defendant's Exhibit No. 9 is rigidly mounted and immovably carried by the member 2.

In the United States Patent to Barcus No. 1,117,762, there is disclosed a coupling of the bayonet type for coupling two

portions of a hose or conduit together, in pressure-tight relation.

Q. 110. Will you please state now whether there is disclosed in this patent to Barcus a male coupling member having bayonet projections or lugs on the side thereof?

A. There is.

Q. 111. Will you please state whether there is disclosed in this patent a female coupling member having mounted in the interior bore thereof a spring-pressed and slidably mounted cup shaped sealing gasket or washer?

By Mr. Hansmann: I object to the question as indicating the desired answer, putting the answer in the mouth of the witness.

Q. 112. Will you please state whether the cup shaped washer 10, shown in Figures 1 and 2 of the Barcus drawing, is so designed and constructed and is so related to the cou-
[fol. 215] pler that it will reciprocate back and forth when the coupler is coupled or uncoupled?

By Mr. Hansmann: I object to the question as indicating the desired answer, putting the answer in the mouth of the witness.

A. A cup shaped washer 10 and 10′, those numbers being allocated to two portions of the cup shaped washer, do operate in the manner you speak of, under the influence of the spring.

Q. 113. Do you find in the Barcus coupler as portrayed by the drawings of the Barcus Patent, each and every one of the elements of the Gullborg coupler, shown particularly in Figure 2 of the Gullborg Patent in suit?

By Mr. Hansmann: Same objection.

A. I find a spring-pressed cup washer arranged to reciprocate within the bore of a coupler. I do.

In the Barcus coupler there is found a coupler body having an enlarged bore containing a spring-pressed, cup-shaped washer and bayonet slots for connection to a fitting or a male part of the coupling. In the Barcus coupler there is also found a shoulder identified by the numeral 1b which,

like the shoulder 25 within the Gullborg coupler, limits the movement of the cup shaped washer.

United States Patent to Barcus No. 1,117,762 was offered in evidence as Defendant's Exhibit No. 12.

In the Barcus sealing device there is a spring pressing upon an annulus formed of two parts threaded together, holding between these threaded portions a cup washer, and containing on the face opposite to that occupied by the cup washer, an annulus washer, the whole of this sealing device being arranged to reciprocate within the bore, and seal against the bore and against the face of the male portion of the coupler; this reciprocation occurring when the two portions of the coupler are engaged or disengaged. The Barcus sealing device contains the spring and cup washer of the Gullborg sealing device and in addition, has those parts which I have described as holding the cup washer and also the annular washer.

A physical reproduction of the Barcus patent coupler was then identified by Mr. Gibson as being a true and correct mechanical reproduction in all material respects and of substantially the same dimensions and proportions as shown in the patent drawing.

The physical reproduction of the Barcus patent coupler [fol. 216] was then offered in evidence as Defendant's Exhibit No. 13.

The Barcus exhibit coupler was then taken apart by Mr. Gibson and all those elements thereof not found in the Gullborg patent coupler were removed and the coupler reassembled without those parts.

The Barcus coupler so deleted and having left within it a spring and a cup shaped washer forming a reciprocal seal between the male and female portions of the coupler was perfectly operative and would work satisfactorily as a bayonet joint coupler for a high pressure fluid conduit.

The three parts removed from the Barcus exhibit coupler are the gasket holding shell 5 in Figure 2 of the Barcus drawing, a threaded washer marked 16 in Figure 2, and a washer marked 7 in Figure 2 of the Barcus drawing. The Barcus coupler thus deleted embodies all the structural elements of the Gullborg patent coupler in suit, and these elements bear the same relation to each other as the corresponding elements of the Gullborg coupler.

A second physical reproduction of the Barcus coupler was then submitted to the witness who stated that it too contained all the material structural details of the Barcus patent coupler.

The only difference between the first Barcus exhibit coupler (Defendant's Exhibit No. 13) and the last Barcus Exhibit coupler is in the matter of size of the parts only, otherwise the device is identical.

The reduced Barcus exhibit coupler was then offered in evidence as Defendant's Exhibit No. 14.

The reduced Barcus exhibit coupler (Defendant's Exhibit No. 14) was then attached to the Gullborg-Alemite grease cup or pin fitting (Defendant's Exhibit No. 5).

The reduced Barcus coupler will function perfectly as a coupler and sealing device for a high-pressure fluid conduit, attached to the Alemite grease cup or fitting.

It could be used entirely satisfactorily with any one of the several pumps and hose (heretofore used) for forcing lubricant into the Alemite grease cup or fitting and through the fitting into the bearing.

Mr. Gibson then stated that he had a great deal of experience in the operation of machine tools and the making of mechanical machine parts and in the actual use of the machine tools in ordinary machine tooling and manufacturing processes, and that if a copy of the Barcus Patent were [fol. 217] given to any ordinary machinist, that machinist, without any further assistance could unquestionably build this second or reduced Barcus coupler if he were asked to do so, so as to fit a particular male coupling member such as the Alemite grease cup or fitting (Exhibit No. 5). Any ordinary machinist would be able to adapt the Barcus coupler as shown in the drawing, to any size male fitting.

It would be within the scope or capacity of any machinist or one skilled in reading drawings, and the mechanical arts, to reproduce the Barcus coupler following the Barcus patent, to any size, dimension or proportion specified.

A mechanical drawing was then submitted to the witness who identified it as correctly and clearly representing the construction, both as to elements as well as to size and proportion of the second Barcus or small Barcus coupler of Exhibit No. 14, and in the left hand view there is correctly represented both as to mechanical elements and as to proportion, the Alemite Fitting, Exhibit No. 5.

The mechanical drawing representing the reduced Barcus Exhibit Coupling was introduced in evidence as Defendant's Exhibit No. 15.

The Stedman Patent No. 456,295 discloses in the drawing and specification, a pipe, hose or conduit coupling of the bayonet type.

A device was submitted to the witness who identified it as a fair mechanical reproduction of the female coupling member shown in Figure 5 of the Stedman patent drawing and stated that it embodies all the material structural details of this female coupling member shown in Figure 5.

There is a difference in the mechanical reproduction of this Stedman female coupler and the coupler shown in Figure 5, in the use of two bayonet slots instead of one in the shell of the coupler and there is a difference of proportion in the projection of the tubular gasket-carrying member referred to in the Stedman drawing as **a**, this portion of the tubular gasket-carrying member **a** being shortened and reduced in diameter in the physical Exhibit Coupler.

The physical reproduction of the Stedman coupling member was introduced in evidence as Defendant's Exhibit No. 16.

The exhibit coupler made substantially in conformity with the Stedman patent was applied by the witness to the [fol. 218] Gullborg-Alemite grease cup or fitting (Exhibit No. 5), who then stated that it operates therewith as a satisfactory coupling.

Any ordinary machinist, if given a copy of this Stedman patent could readily make the exhibit coupler according to the Stedman disclosure so as properly to co-operate with the particular male coupling member comprising the Alemite grease cup or nipple, Exhibit No. 5. The production of such a coupler according to the Stedman disclosure, to fit onto that particular male coupling member here shown as a grease cup, would not involve anything beyond mere mechanical skill of the average machinist.

A copy of the U. S. Patent No. 456,295 to Stedman was introduced in evidence as Defendant's Exhibit No. 17.

A device was then submitted to the witness who identified it as correct duplicate in section of the Defendant's Coupler of Exhibit 6-C.

The sectional duplicate of the Defendant's Coupler was introduced in evidence as Exhibit 6-C-C.

The functional parts of the coupler of the drawing of the Stedman Patent and the Defendant's coupler in suit, Defendant's Exhibit No. 9, are alike. In each coupler there is a central tubular gasket supporting member, an external bayonet slotted and inwardly flanged shell, slidable upon the tubular member first referred to. In each device there is a spring enabling the outer shell to slide over the inner tubular member, for the purpose of engaging the lugs of a male bayonet coupling part, and they both in the same manner serve the same purpose of coupling two parts of the conduit together.

The difference in detail between these couplers are first, that the outer bayonet slotted coupling sleeve is formed of one piece of material in the Stedman patent drawing but of two pieces of material screw-threaded together in the defendant's coupler, Exhibit No. 9. The inner tubular gasket-supporting member of the Stedman Patent drawing consists of one piece of material, whereas in the Exhibit No. 9 it consists of three parts; one being the tubular gasket-supporting member upon which the gasket is placed, and another outer tube rigidly affixed to the first tubular gasket-supporting member through the end connecting piece which also forms the connection with the hose. The extension of the inner tubular gasket-supporting member of the Stedman patent drawing is not present in the Exhibit [fol. 219] No. 9, but in substitution therefor the projection of the outer tube of the gasket-supporting member serves a similar purpose, but outwardly in regard to the male coupling member rather than inwardly.

The defendant's coupler shown in the drawing Exhibit No. 9 embodies in general, all the material structural and functional features of the Stedman patent coupler. It would function; it cannot help but function in exactly the same way as the Stedman coupler shown in his patent drawing.

The British patent No. 21,893 of 1906 issued to Alley discloses a screw type of hand pump for forcing lubricant grease; that pump having a handle, a piston rod threaded, and a piston. At the orifice of the pump there is provided a check valve so arranged that when the pump is not con-

nected to other parts, that check valve forms a closure against the egress of lubricant from the pump.

The apparatus disclosed in the Alley patent is a compressor of the hand screw pump type, having a passage from the compressor to a female coupler and a male part of the coupling device, wherein the two parts of the coupling device are coupled by means of a screw thread; the male part of the coupling device is provided with a spring-pressed check valve permitting passage of lubricant from the pump to the male grease cup fitting part of the coupling. In the specfication of that patent it is very clearly stated that this male part of the coupling or grease cup fitting may be provided, in its relation to the female part of the coupling, with a bayonet or like catch.

The male part of the coupling or grease cup fitting would be fastened to, or screwed into the conduit or passage leading to the bearing of some part of an apparatus which requires to be lubricated and it is Alley's intention to use a number of such male grease cup fittings at such parts on a machine or apparatus which has parts to be lubricated, and Alley would use his compressor complete, by moving it from one such grease cup fitting to another such grease cup fitting, as required by the demands for lubrication of the parts of the apparatus.

The male coupling member of Alley, or grease cup functions in exactly the same manner as the Alemite grease cup or fitting which has been submitted as Exhibit No. 5. It serves to receive lubricant forced into it under pressure and it is so arranged with its check valve that lubricant having [fol. 220] been forced thereinto past the check valve, cannot exude therefrom after the removal of the compressor.

Q. 149. Would you say that Alley therefore discloses broadly a combination of a valved lubricant receptacle or grease cup stationarily affixed to a bearing, and a portable or perambulatory lubricant-dispensing compressor comprising a pump and a coupler, there being complementary means on the stationary grease cup and on the coupler or nozzle of the portable compressor for effecting a temporary and detachable fluid-tight connection between the two?

A. He does.

By Mr. Hansmann: I object to that question as putting in the mouth of the witness the words that defendant's attorney wishes to appear in the deposition.

The bayonet catch referred to by Alley on pages 2 and 3 of the specification of the Alley Patent:

"It is obvious that the means for securing the pump upon the lubricator may be modified—for example, instead of a course pitch screw, a bayonet or like catch may be used and that the form of valve used in the nozzle may be varied."

is the common bayonet catch which is shown in the patents to Barcus and Stedman, already referred to, and which has been used for many, many years prior to Alley, and at his time was in fact a common method of detachably connecting two rods or two parts of a conduit together, for the purpose of making a rigid connection or a pressure-tight joint.

The Stedman coupling (U. S. patent to Stedman No. 456,295, issued July 21, 1891) is aptly illustrative of one form of such a bayonet catch referred to in the specification of Alley.

The British patent to Alley No. 21,893 of 1906 was introduced in evidence as Defendant's Exhibit No. 18.

The Barcus patent already in evidence and the Brown patent No. 1,141,101 are both examples of bayonet type of couplers or bayonet catch which would exemplify the bayonet catch referred to in the specification of the Alley Patent, as a substitute for the screw connection.

[fol. 221] A photostatic copy of a drawing was submitted to the witness and identified by him as showing in the two figures on the extreme left, correct reproductions of the drawing of the Alley patent, with the compressor shown detached in one figure and shown attached in the other. The two figures to the extreme right of that drawing likewise very properly represent the bayonet catch connection for the two parts of the coupler of the Alley lubricating device referred to in the specification.

The drawing so identified, was introduced in evidence as Defendant's Exhibit No. 19.

A device was submitted to the witness who identified it as being quite obviously a practical Chinese copy of the drawing of the Alley 1906 British patent, with the variation of the coupling arrangement carried out in accordance with the very clear and unmistakable instruction of the inventor Alley, where he says in his specification beginning at line 49 of page 1:

"it is obvious that the means for securing the pump upon the lubricator may be modified—for example, instead of a course pitch screw a bayonet or like catch may be used."

It is quite clear that in this exhibit that suggestion has been followed and the bayonet or like catch has been used.

Two other devices were submitted to the witness who identified them as being very evidently the female and male parts of the coupling of Alley's British patent of 1906 and as being adaptable for use with the pump last identified, and when so adapted or connected to that pump, in substitution for the corresponding parts incorporating Alley's bayonet catch coupling, then the whole device becomes a Chinese copy of the drawing of the Alley 1906 patent in every particular.

The reproduction of the Alley devices were introduced in evidence. The Alley devices were designated collectively as Defendant's Exhibit No. 20, and the pump separately designated as No. 20-A; the screw type of coupler of Alley as No. 20-B; the bayonet type of coupler of Alley as No. 20-C; the screw type of grease cup or lubricator of Alley as No. 20-D, and the bayonet type of grease cup or lubicator of Alley as No. 20-C.

The Alley compressor comprising the Alley pump Exhibit No. 20-A and the Alley bayonet type coupler or nozzle Exhibit No. 20-C were then attached or connected onto the [fol. 222] Gullborg-Allemite grease cup or pin fitting, Defendant's Exhibit No. 5, by the witness who stated that the Alley compressor cooperates perfectly with the Alemite grease cup fitting and that the whole device would operate as a compressor for lubricating bearings, in a satisfactory manner.

When the Alley compressor of Defendant's Exhibit No. 20-A is connected onto the Alemite grease cup or pin fitting, said Alley bayonet catch coupler co-acts with the ends of the pin forming part of said Alemite grease cup. It co-acts with the ends of said pin in the usual manner of a bayonet catch.

A photostatic reproduction of page 258 of the French journal "Omnia" of April 25, 1914 and a translation of certain part of the text was submitted to the witness, who examined the same and stated that in the first two columns

of page 258 of the French publication "Omnia" appear three illustrations; that in the center part of the columns marked 1, is a clear reproduction or photograph of a compressor for use in lubricating bearings consisting of the usual parts—a hand screw pump, a hose and a coupler. In this illustration also, a bearing is shown, evidently for the purpose of illustrating the act of lubrication. In the picture numbered 2, there is shown an enlargement of the coupler portion of the compressor, attached to a portion of hose, an- there is also shown in that picture a fitting or male part of the coupling, either attached to, or forming part of a bearing, and these two parts are evidently capable of being coupled and co-acting with one another, for the purpose of lubricating the bearings. In the illustration near the top of the left hand column, there are shown three sectional views of the details of the female coupler illustrated in the other pictures referred to, and of the grease cup, fitting or male member of the coupling. It is clear that the coupling member is capable of making a pressure-tight joint between itself and the male grease cup fitting coupling member. All the parts illustrated in the pictures are parts of a common compressor for lubricating bearings with grease, under high pressure. Referring to the translation of page 258 of the journal "Omnia", I find that the heading or subject is an instantaneous coupling Seng system for lubricating with a thick grease, and the translation details just how the parts of the compressor which are illustrated in the same columns co-operate, couple and uncouple, and how the operation of the compressor results in the lubrication of the bearing, as desired.

[fol. 223] Seng, in this publication, discloses a valved grease cup. The grease cup is provided with a check valve, spring-pressed against an inwardly flanged seat forming part of the body of the grease cup fitting. Seng's grease cups are illustrated as being screwed into and permanently affixed to the bearing. This publication of Seng discloses a portable lubricant dispensing compressor. This publication of Seng teaches the lubrication of a series of bearings by a common, single and portable lubricant dispensing compressor.

The disclosure of Seng's device in the paper "Omni" is that of a compressor for lubricating bearings or parts of apparatus that may require lubrication, and so also is the

disclosure of Gullborg in his patent. The object of these devices is exactly the same. The means whereby Seng accomplishes these objects, comprise a hand operated screw type of pump with a hose attached to its orifice and on the other end of that hose a female part of a coupling device which is readily attachable and detachable from a male portion of the coupling device, which male portion or grease cup is permanently attached to a bearing, for the purpose of lubricating that bearing. The disclosure of Gullborg, in his patent, comprises exactly the same elements and for the same purpose disclosed in the same manner and used in exactly the same way. For all practical and all theoretical purposes, the device of the disclosure of Seng in "Omnia" and the device of the disclosure in Gullborg's patents serve exactly the same purpose in exactly the same way. The apparatus that may require lubrication in the case of the Seng device would be provided at each of the parts or bearings, or conduits to bearings, with a spring-pressed, check-valved grease cup or fitting forming the male member of the coupling device and upon the occasion of the bearings or parts of that apparatus requiring to be lubricated, the portable compressor of Seng would be applied by means of its female coupler upon the end of its hose, to each and every one of the grease cup fittings—and each of the bearings to which those fittings were related, would be then lubricated by the operation of compressing the grease within the device, by means of the turning of the handle, forcing the screw-threaded piston rod and piston upon the grease contained within the receptacle or pump. The device of Gullborg would be used, applied and operated in exactly the same manner as the device of Seng, as to its parts and as a whole. There is, in fact, no other way nor method nor application, whereby these two devices could be used in [fol. 224] any other manner for the purposes of lubricating the parts of machinery, and that purpose is the only purpose that they have.

There are slight differences in the construction of the two devices—the Seng device disclosed in "Omnia" and the Gullborg device of the Gullborg Patent; though in general the pump of the Gullborg device might have been copied directly from the pump of the Seng device, for they are so similar in appearance and function. The hose of the Gullborg device is so similar in appearance and function that it

might well have been copied from the Seng device. The female coupler of the Gullborg device, while serving the same purpose as the female coupler of the Seng device, has a different mechanical means for connecting it to the male portion the coupler or grease cup fitting, inasmuch as the Gullborg female coupler is provided with a true bayonet slot of ancient form, for the purpose of co-operating with the bayonet lug or pin of the male member of the coupling or grease cup, while the Seng female coupling is provided with three claws or levers which are arranged to engage with a flange projecting from the body of the grease cup fitting, whereby upon engaging the female coupler with the male portion of the coupling, a washer situated within the female coupler will be compressed between the faces of the female and male portions of the coupling, so forming a grease-tight joint against the leakage of lubricant under high pressure and this feature of Seng accomplishes exactly the same object as the sealing cup washer of the Gullborg coupling device, (which, as has already been testified to, consists of a cup washer capable of reciprocating within the bore of the female coupler, under the influence of a spring); the Seng coupling device requiring likewise, the pressure of the hand of the operator in order to accomplish the pressure-tight coupling of the two parts, in exactly the same way as that pressure of the hand is necessary in the case of the Gullborg coupling device.

The grease cup, fittings or male portion of the coupling of the Gullborg patent are intended by the inventor to be rigidly affixed to each and every one of the bearings or parts of the apparatus which may require lubrication, and the Gullborg compressor consisting of pump, hose and female coupler would be applied to each and every one of such grease cup fittings, for the purpose of lubricating each of the bearings to which those fittings were applied, in exactly the same manner as the system or plan of lubrication of Seng.

[fol. 225] The date of this "Omnia" publication is Saturday, 25th of April 1914. Its identification number is 434-137. The number of the page upon which the disclosure of Seng appears is 258.

"Omnia" is a publication devoted mainly to arts and sciences, and one of those which makes a practice of describing, illustrating and disclosing to the public the new

ideas as they are submitted to them, either by the issuance of French patents or by the communication of French engineers, inventors, scientists, etc.

"Omnia" is comparable with the American publications "Automotive Industries" and "Scientific American".

A photostatic copy of the publication "Omnia" was introduced in evidence as Defendant's Exhibit No. 21, and the English translation was introduced as Defendant's Exhibit No. 22, subject, however, to further and appropriate identification of this translation.

A copy of the United States patent to P. B. Laskey and W. Arnold, for a device known as an axle lubricator, No. 242,141 of May 31, 1881, was submitted to the witness.

In the Laskey and Arnold patent, there is provided a series of grease cup fittings permanently affixed to a series of bearings requiring lubrication, and a portable compressor with a coupler or means of attachment of the compressor to any one of the grease cup fittings, the combination of parts being provided for the purpose of lubricating the bearings of whatever apparatus the bearings may form a part of. The various elements of this plan of lubricating bearings are the grease cup fittings which are permanently affixed to the bearings or to a conduit leading to the bearings, and are provided with a spring-pressed check valve for closing the orifice of the fitting against either the loss of lubricant, or the entrance of dirt; a screw thread is upon the outward surface of the body of the fitting. A compressor having an internal screw thread forming part of a coupling is adapted to engage with the external screw thread of the fitting of the bearing. There is a provision, forming part of the coupling of the compressor, for depressing the check valve closure of the fitting during the act of lubrication; a check valve at the orifice of the pump proper to prevent leakage of lubricant from the pump when not in use; a pump cylinder and piston for forcing the lubricant through the fitting and through the conduit and so to the bearing; [fol. 226] and a check valve permitting the ingress of lubricant to the pump. The fitting, described in detail, has exactly the same purpose and functions generally the same way as the grease cut fitting of the Gullborg patent; the compressor is portable, perambulatory and when affixed to the fittings, operates and functions generally in the same

manner as the Gullborg compressor; in fact, each of these devices performs the same service.

The term "grease" is here used in a general way, and the term "lubricant" which would include both the heavy and the lighter lubricants might be better—the matter of the viscosity of the lubricant would have no material influence upon the operation of this device. It could use any common lubricant.

The particular machinery to which Laskey and Arnold's lubricant receptacles are affixed is a wagon of which the illustrated axles form the bearing or part requiring lubrication.

The Laskey and Arnold patent was introduced in evidence as Defendant's Exhibit No. 23.

A copy of the United States patent to Winkley, No. 1,201,414 dated October 17, 1916 was identified by the witness and introduced in evidence as Defendant's Exhibit No. 24.

A copy of the United States patent to Winkley, Reissue No. 14,667 dated June 10, 1919 was identified by the witness and introduced in evidence as Defendant's Exhibit No. 25.

The original Winkley patent No. 1,201,414 discloses a compressor and a fitting or grease cup; and the compressor comprises a pump, hose and coupling.

The object of the Winkley apparatus is the lubrication of the bearings of machinery. That object would be accomplished with the Winkley apparatus by coupling the coupler of the compressor to the grease cup fitting and operating the pump, disconnecting the coupler from the fitting after completing the act of lubrication, and repeating this process on other grease cup fittings of similar character, affixed to other bearings.

The drawings of this original Winkley Patent No. 1,201,414 are signed:

"Frank D. Winkley, by Pond & Wilson, Attorneys."

The drawings of the Winkley Reissue patent No. 14,667 (Exhibit No. 25) are signed:

"Frank D. Winkley, by William, Bradbury & See, Attorneys."

[fol. 227] In the Winkley Reissue patent No. 14,667, there appears in the lower part of the second sheet of drawings,

a drawing of the chassis of an automobile which does not appear at all on any of the drawings of the original Winkley patent No. 1,201,414.

The grease cup or fitting of the two Winkley patents is arranged to be screwed into and therefore permanently affixed to the bearing of the machine requiring lubrication. It is furnished with a spring-pressed check valve, forming a closure at the outer end of the fitting, and there is a flange projecting from the outer end of the body of the fitting. This flange is so formed and proportioned that a portion of the coupler may engage under the surface of this flange. This portion of the coupler which so engages with the fitting flange has the form of a claw and is forked so that the two forks of the coupler will pass on either side of the central body of the fitting when the coupler is engaged thereto, and that forked claw will serve to hold the coupler in operative relation to the fitting. When the coupler is so held, a slidable, cylindrical portion of the coupler which forms a part of the conduit for lubricant and which is provided with a check valve at its orifice, deseatable upon the completion of the coupling operation, is provided with a spring pressing upon its upper surface so as to cause this slidable check valved conduit and to be held forcibly in contact with the outer end of the grease cup fitting, thus providing a seal against the leakage of lubricant under pressure, at the joint between that slidable portion and the grease cup fitting, and to furnish a continuous conduit for the lubricant to the bearing.

The method of operation of this coupler and fitting is to engage the forked claw of the coupler with the flange of the fitting, by sliding the coupler transversely of the axis of the fitting, so raising the slidable, reciprocating conduit end and deseating the check valve therein, thereafter, of course, forcing lubricant therefrom. This coupling may be attached to and detached from any number of such fittings.

A device was submitted to the witness who identified it as a physical embodiment of the grease cup fitting shown in the drawings of the Winkley patent.

This device has a check valve and spring within the grease cup fitting, which spring is for the purpose of effecting a closure at the outward end of the fitting. It has the flange of Winkley's grease cup.

The physical embodiment of the Winkley grease cup [fol. 228] so identified, was introduced in evidence as Defendant's Exhibit No. 26.

Another device was submitted to the witness who identified it as a compressor consisting of a hand screw pump and hose, and a coupler.

The coupler of this last device was attached to the grease cup, Exhibit No. 26, The coupler properly cooperated with the grease cup to connect the two.

On the coupler of this compressor, there is a forked claw which can readily be engaged under the flange of the grease cup fitting, thus affecting a substantial coupling between the two parts. This forked claw coupling means of this coupler is a physical example of the forked claw coupler of the Winkley patent. It appears to contain a gasket or washer which might be capable of sealing the joint between the coupler and the fitting.

Upon removing the interior parts of th-s last "claw" type of coupler, I find that there is a washer having the general appearance of a cup-washer, held in position and pressed upon by a spring in such relation in the orifice of the coupler, that an orifice provided in the center of the disk of the cup washer may co-operate with the orifice of the grease cup fitting and provide a passage for lubricant thereto. Pressure upon the spring is provided by means of a closure cap at the opposite side of the coupler. There is a passage for lubricant provided in one wall of the cylindrical bore of the coupler, within which bore the washer can reciprocate, admitting the lubricant to the space occupied by the washer. This spring-pressed washer is capable of forming a seal with the face of the grease cup fitting when the coupler is attached thereto.

The compressor, including the screw type of pump, a hose and the Winkley clay type of coupler, so identified, were introduced in evidence as Defendant's Exhibit No. 27.

A photostatic copy of a letter relative to the French publication "Omnia" (Defendant's Exhibit 21) was read into the record and introduced in evidence as Defendant's Exhibit 21-B.

[fol. 229] "General Motors Corporation

Detroit, Michigan

October 18, 1927.

Mr. Edward L. Reed, 1165 Reibold Bldg., Dayton, Ohio.

My Dear Mr. Reed:

We are glad to send you a copy of the photostat which you requested from Omnia 9 Annee 434, page 258.

In order to make a copy of the page showing the date, it was necessary to photostat the preceding page. The date is given on this page but not the number of the page. If you were to paste these two sheets together you would have page 257 recto and 258 the left hand page.

I hope this is clear. If there is any question about it, please feel free to write again.

(Signed) Caroline W. Lutz, Librarian, Research Laboratories."

A photostatic copy of drawings and specification of British patent No. 3,028, dated February 24, 1915, to Seng, were submitted to the witness who stated that the specification and drawings disclose a readily attachable and detachable coupling, whereby the one part of the coupling being a grease cup or lubricator or fitting, may be fastened to a bearing to be lubricated, and the other part of the coupling consists of hand operated "claws" or levers for producing a pressure-tight joint between the two parts of the coupling, and those two coupling parts are referred to in the specification as, that they "may be used particularly in the case of forced lubrication with oil or gas. To this end, recourse may be had to a ball lubricator forming obturator and comprising an external flange for securing and fixing the joint, (Figures 1 and 2)". Claim 1 of th-s specification refers particularly to the two parts of the coupling as capable of forming an "instantaneous joint for pipes conveying fluids under pressure, particularly applicable to lubricators."

Both the British Seng patent and the Gullborg patent disclose a readily attachable and detachable coupling device for use in forced lubrication with oil or grease, and the parts of this coupling serve the same purpose as the parts of the Gullborg coupling in the making of such an instan-

[fol. 230] taneous joint as is required in the lubrication of parts of machinery.

The male part of Seng's coupling is a grease cup, lubricator or fitting, designed for fixed attachment to bearings of a machine, and the other part being the female portion of the complete coupling and adapted to readily attach and detach a compressor to and from the male fitting.

Copy of the British Seng patent No. 3,028 of 1915 was introduced in evidence as Defendant's Exhibit No. 29.

A photostatic copy of the French patent issued to Seng No. 468,869, dated July 18, 1914 was submitted to the witness who stated that the drawing of this French Seng patent is a line-for-line reproduction of the drawing of the British Seng patent.

The photostatic copy of the French patent No. 468,869 to Seng, was introduced in evidence as Defendant's Exhibit No. 30.

A photostatic copy of French patent No. 20,083 to Seng (Addition to Seng's French patent No. 468,869) was identified by the witness and introduced in evidence as Defendant's Exhibit No. 31 and a translation of the French patent No. 20,083 (Exhibit No. 31) was introduced in evidence as Defendant's Exhibit No. 32, subject, however, to subsequent identification.

The United States patent to Laskey and Arnold of 1881, the British patent to Alley of 1906, the British and French patents to Seng, and Seng's publication in "Omnia" as well as the original and Reissue U. S. patents to Winkley and the Gullborg patent in suit, all disclose a system or plan of lubrication of bearings of a machine, comprising a permanently affixed grease cup, lubricator or fitting at each bearing, and a portable, perambulatory compressor comprising a pump and a hose and a coupler on the end of the hose for co-acting with the grease cups, lubricators or fittings, so that the compressor as a whole may be moved from bearing fitting to bearing fitting, as described, and each of those bearings to be lubricated by operation of the compressor.

The only real material difference in the disclosures of those prior art patents is in the means used for coupling the

female coupler on the end of the hose to the male grease cup, lubricator or fitting at the bearing. Some do it one way; some do it another.

Each of these prior art patents or publications disclose among other things, a grease cup or a "fitting" provided with a spring-pressed check valve. They each disclose some [fol. 231] portable grease dispensing device, capable of forcing grease under pressure.

In the Laskey system of lubrication, the arrangement for coupling is a screw thread, the female coupling having a female thread and the male coupling having a male thread corresponding. In the Alley system, the Alley drawing shows a screw coupling of the same general type as Laskey and in his specification he directs that a bayonet or like catch may be used for the purpose. In Seng, there is a three claw lever means for coupling the parts together. In the French patent of addition to Seng, there is disclosed a variation of his three claw lever type using ball in place of the claws for the same purpose; the original Seng French and British patents being identical; the Winkley coupling is of a forked claw type; and the Gullborg coupling is of the bayonet type.

A copy of U. S. Patent to E. H. Sholder, No. 242,564, dated June 7, 1881 was submitted to the witness who stated that it discloses a hose coupling of the bayonet catch type.

The copy of U. S. Patent to Sholder No,. 242,564 was introduced in evidence as Defendant's Exhibit No. 33.

A copy of U. S. patent to T. F. Lees, for a coupling, pipe and hose, No. 610,359, dated September 6, 1898 was identified by the witness, who stated that it discloses a bayonet joint coupling for two parts of the conduit.

The copy of U. S. Patent to Lees No. 610,359, September 6, 1898, was then introduced in evidence as Defendant's Exhibit No. 34.

A photostatic copy of a drawing was submitted to the witness who stated that it represents disclosures of the French and British patents of Seng and the French publication in Omnia, also of Seng, there being used in the case of this photostat Seng's ball claw type of coupler.

The photostatic copy of the drawing of Seng's devices, so identified, was introduced in evidence as Defendant's Exhibit No. 35.

A copy of a U. S. patent issued to A. V. Gullborg, for lubricating apparatus, No. 1,307,733 of June 24, 1919 was submitted to the witness who stated that in this Gullborg patent there is disclosed, in the drawing, a compressor having a female coupler and a grease cup, lubricator or fitting, for attachment to the bearings of machinery, it being adapted to couple with the coupler of the compressor. [fol. 232] The Alemite grease cup or "fitting" heretofore submitted as Defendant's Exhibit No. 5 is a full and complete physical embodiment of the device shown in Figure 2 of this Gullborg patent.

Claim 3 of this Gullborg patent (No. 1,307,733) is clearly readable upon this Alemite fitting (Defendant's Exhibit No. 5). Both claims 4 and 5 (Gullborg patent 1,307,733) also read on that Bassick-Alemite grease cup or "fitting".

A copy of U. S. patent to Gullborg No. 1,307,733 of June 24, 1919 was introduced in evidence as Defendant's Exhibit No. 36.

The defendant's hand compressor including the defendant's pump, Exhibit No. 6-A, hose, Exhibit No. 6-B and coupler, Exhibit No. 6-C, was attached to the Bassick-Alemite grease cup or pin fitting (Defendant's Exhibit No. 5), in an operative manner.

The witness, after reading Claim 1 of the Gullborg patent in suit, stated that the elements of this claim are:

"a hollow coupling member having a pin projecting from one side thereof and a spring pressed closure."

This element is present in the assemblage of apparatus in the form of the Alemite grease cup, lubricator or fitting.

"a pump having a flexible conduit connected with the outlet thereof."

This element is present in the form of the pump and flexible hose, Defendant's Exhibits 6-A and 6-B.

The next element is

"a second hollow coupling member secured to the other end of said conduit for receiving the closed end of the said first named coupling member and provided with a bayonet slot for receiving said pin, the transverse portion of said slot being inclined from the longitudinal portion thereof toward the outer end of the coupling member, the bore of

said coupling member being enlarged to provide a shoulder, a perforated sealing disk slidably mounted in the enlarged portion of said bore, and a spring confined between the ends of said conduit and said disk for urging said disk against said first named coupling member."

[fol. 233] This main element of the claim is not present in the assembly of Defendant's Exhibit No. 6 comprising 6-A, 6-B and 6-C, to the Alemite grease cup Defendant's Exhibit No. 5.

The fourth element of Claim 1, that is, that coupler element is not present because, first, the transverse portion of said slot, being the bayonet slot referred to, is not

"inclined from the longitudinal portion of the slot toward the outer end of the coupling member;"

because the bore of the coupling member is not

"enlarged to provide a shoulder with a perforated sealing disk slidably mounted in the enlarged portion of the bore"

and there is no

"Spring confined between the ends of the conduit and the disk for urging the disk against the first coupling member."

Those specific constructions of this main element of the claim are not present in the defendant's coupler, Exhibit 6-C.

The function of those structural features is, as explained in the Gullborg patent specification, to furnish or provide, or produce a grease cleansing vacuum within the coupler during the process of disengagement of this coupler part from the grease cup, lubricator or fitting.

Upon examination of the sectional sample of defendant's coupler, Defendant's Exhibit No. 6-C-C, the witness stated that he does not find any elements in defendant's coupler Exhibit No. 6-C or No. 6-C-C, which might be considered equivalent to the elements in this Gullborg structure *structure* of coupling. There are no elements in this coupling which could possibly produce the functional operation of the elements of the Gullborg coupling.

The spring of the defendant's coupler does not and cannot function in the manner of the spring of the Gullborg coupler, nor can it by any possibility do so, for it is not confined between the ends of the conduit and any

sealing disk. It has no influence whatever upon the urging of any sealing disk against any coupling member and it has no relation to any sealing disk slidably mounted in the enlarged portion of the bore of the coupling member. It [fol. 234] merely serves to retain the coupler and its parts, in all respects, in fixed relation to the grease cup, lubricator or fitting.

Considering Claim 2 of the Gullborg patent in suit, the element

"a perforated sealing disk mounted to reciprocate in the bore of said coupling member, means for yieldingly urging said sealing disk against the closed end of said first named coupling member, and means for limiting the movement of said sealing disk in the direction of said second coupling member"

are all absent from the defendant's coupler (Defendant's Exhibit 6-C).

In claim 3, the

"perforated sealing disk"

and the elements mentioned after the reference to that sealing disk in that claim, are all absent from the defendant's coupler.

All the elements referred to in Claim 4 including and after the words:

"perforated sealing disk"

are absent from defendant's coupler.

All the elements of Claim 5, referred to by the words:

"of a hollow coupling member"

and by the following words of that claim, are not present in the defendant's coupler.

In Claim 6, all the elements referred to in the wording beginning:

"of a coupling member"

are not present in defendant's coupler.

In Claim 7, all the elements referred to by the words

"of a coupling member"

and the following wording, are not present in defendant's coupler.

In Claim 8, the "means" there provided "for removing excess lubricant" from the adjacent ends of coupling members, theretofore referred to, when said coupling [fol. 235] members are uncoupled, is not present in defendant's coupler.

The elements in each of claims 1 to 8 inclusive which are not present in the defendant's coupler are substantially the same elements.

The function or result which Gullborg ascribes to these particular structural elements in each of claims 1 to 8 inclusive which are not present in defendants coupler, is the supposed production of a cleansing vacuum within the coupling during the act of uncoupling, as referred to in his specification.

The witness then stated that the tests conducted by him during his preceding testimony conclusively support his statement. Though those tests were conducted in the most careful manner and with the most delicate apparatus, for the purpose of indicating a cleansing vacuum or any vacuum if such were present, yet there was a clear indication that no such vacuum was present in defendant's coupler upon uncoupling or at any other time.

The witness then attached defendant's compressor, Exhibit No. 6, to the Alemite-Gullborg grease cup or fitting, and stated that Claim 15, in the light of the drawings and specification of the Gullborg patent, does not read upon the apparatus thus coupled together because the Gullborg patent drawings and specification very clearly instruct that the female coupling member contains a cleansing vacuum producing element and such cleansing vacuum producing element is not present in this combination of apparatus.

Reading the words of Claim 15, as if they appeared in the air, unrelated to anything else, it would be possible to read the wording of that claim upon the combination of parts here assembled. Without relation to any other construction or disclosure than is contained in the words of Claim 15, there is found an element of

"a grease cup comprising a tubular member having a closure seat, a closure, a pin extending through said tubular member and from both sides thereof, and a spring confined between said pin and closure, and tending to hold said closure on its seat."

That element is present in this combination of apparatus in the form of the grease cup or fitting, and the element of

"grease pump having a discharge conduit"

in that claim is here in the form of the defendant's pump and hose, and another element in the claim; namely,

[fol. 236] "means coacting with the end of said pin, for detachably connecting the discharge end of said conduit with said grease cup;"

and that broad statement of a device is here present in the coupler, defendant's Exhibit No. 6-C.

Claim 15, in reciting the Gullborg-Alemite grease cup and a pump "having a discharge conduit and means coacting with the ends of said pin for detachably connecting the conduit with the grease cup" is not limited to any particular form of pump conduit and coupling means. That wording embraces any pump, any discharge conduit and any coupler.

The Alley exhibit device comprising Alley's pump and bayonet catch type of coupler or nozzle (in evidence as Defendant's Exhibits Nos. 20-A and 20-C) were attached by the witness to plaintiff's Gullborg-Alemite grease cup or "pin fitting" in evidence as Defendant's Exhibit No. 5.

Claim 15, when considered apart from the specification and drawings of the Gullborg patent in suit, is aptly and fully descriptive of this combination or assemblage of apparatus, to wit: the Gullborg-Alemite grease cup.

Claim 15 would be equally definitive of the combination of the plaintiff's Gullborg grease cup with Alley's grease pump, even though the bayonet catch were modified according to, or in conformity with the disclosures of any one of the several prior art patents in evidence showing bayonet conduit couplers.

Claim 15, considered in the light of the specification and drawings of the Gullborg patent in suit, would certainly not be readable upon the Alley device when connected to the plaintiff's Gullborg grease cup in evidence, because in this combination of the Alley grease pump and bayonet coupling for attaching that Alley compressor to the Gullborg grease cup fitting, there is no apparatus for producing the cleansing vacuum function of the Gullborg patent, as disclosed in his drawing and enlarged upon at length in his specification.

If merely its abstract language were considered, Claim 15 would be definitive of a combination of plaintiff's Gullborg grease cup, (in evidence) and the lubricant compressor of Winkley, if in place of Winkley's claw type of conduit coupler any one of the several prior art bayonet type of couplers were substituted.

The substitution of a bayonet coupler or catch of Alley, Stedman, Barcus or Sholder or Lees, in place of the claw type of coupler on the Winkley lubricant grease compressor [fol. 237] would not involve any unusual skill. It would be a matter of choice with a good mechanic and he would apply anyone of those, as he chose, if he wished to use a bayonet type and he would find no difficulty in so doing.

To build any one of the several bayonet type of couplers, as for instance, the bayonet conduit coupler of Barcus, Stedman, Lees or Sholder, of a particular size and of particular proportions to fit onto the Gullborg grease cup, in evidence as Defendant's Exhibit No. 5, would be nothing more than mere skill of a mechanic or machinist. Such an operation would be considered in the day's work of a competent mechanic.

A copy of United States patent to one H. J. Murphy, for Pressure Lubricating System and Apparatus, No. 1,637,326, dated July 26, 1927 was submitted to, and identified by the witness.

This patent discloses a compressor and grease cup fitting, forming a system or plan for lubricating bearings of machinery.

A piece of apparatus was submitted to the witness who, upon examination, stated that it is a physical reproduction of the compressor of the patent to Murphy.

The Murphy patent No. 1,637,326 was introduced in evidence as defendant's Exhibit No. 37.

The physical embodiment of the Murphy compressor was introduced in evidence as Defendant's Exhibit No. 38.

Another device was submitted to the witness, who stated that it is a physical embodiment of the grease cup or fitting of the patent to Murphy.

The grease cup of the Murphy patent was introduced in evidence as Defendant's Exhibit No. 39.

Another device was submitted to the witness who stated that it is a grease cup, lubricator or fitting having a spring pressed closure or check valve in the internal passage thereof and lugs or pins projecting from the body, evidently for the purpose of forming part of the bayonet catch or joint. This device would function satisfactorily in every respect as a bayonet type of conduit coupling member, serving as a lubricant receptacle or grease cup.

The device so identified was introduced in evidence as defendant's Exhibit No. 40.

Another device was submitted to the witness, who identified it as substantially a duplicate of the previous device, cut open or sectioned.

[fol. 238] This last device was introduced in evidence as Defendant's Exhibit No. 40-A.

If, in place of the defendant's coupler, Exhibit No. 6-C, another coupler having a spring-pressed and slidably mounted cup-shaped washer similar to Gullborg's construction were substituted on defendant's compressor, Exhibit No. 6, claims 1 to 8 of the Gullborg patent would not read upon the reciprocatory pump, hose and such other coupler, when combined with the Gullborg grease cup, because this assemblage of apparatus is not in accordance with the disclosure of the Gullborg patent, particularly in the drawings and the specification, in that it would be physically impossible to develop or produce any cleansing vacuum during the use of the apparatus.

Another device was submitted to the witness, who stated that it is a hose or conduit and on its one end is a coupling of the bayonet catch type, and contained within the coupling is a spring-pressed cup washer. This spring-pressed, reciprocatory cup-washer conforms to the device referred to in the Gullborg claims 1 to 8 inclusive as intended for the purpose of producing a cleansing vacuum.

The device so identified was introduced in evidence as Defendant's Exhibit No. 41.

The hose and coupler of Exhibit No. 41 were attached to the defendant's pump and the coupler of this hose was attached to the Gullborg-Alemite grease cup or fitting, in

evidence as Exhibit No. 5. This assembly of apparatus cannot possibly come within the scope of the claims 1 to 8 of the Gullborg patent because there is now, in this apparatus, no possibility of the production of a cleansing vacuum or any vacuum at any time, or under any conditions that may occur during its use or operation, because, in order to render it possible for any spring-pressed, reciprocating cup-washer to function as a vacuum producing element of the apparatus, it is essential in the use of the apparatus as a lubricating device to perform a special act prior to the act of uncoupling the compressor from the grease cup fitting, and that special act is the reduction of, or the entire elimination of the pressure under which the lubricant exists throughout the whole apparatus. Since there is in this apparatus no means whatever for relieving that pressure prior to the act of uncoupling, it is consequently physically [fol. 239] impossible to have any cleansing vacuum or any vacuum whatever, either at the coupling, at the grease cup fitting or at any other place in the apparatus.

The defendant's coupler, in evidence as Exhibit No. 8-C and the defendant's coupler in evidence as defendant's Exhibit No. 6-C, are both structurally and functionally substantially alike.

From defendant's pump, in evidence as Exhibit No. 8-A, the defendant's hose and coupler, in evidence as Defendant's Exhibits Nos. 8-B and 8-C, respectively, were detached and to this defendant's pump, Exhibit No. 8-A, the hose and coupler, in evidence as Exhibit No. 41, were affixed and the coupler of this exhibit No. 41 was connected to the Gullborg-Alemite grease cup comprising Exhibit No. 5.

This apparatus does not, in any sense, come within the scope of the claims 1 to 8 inclusive of the Gullborg patent, because there is no possibility, in the use of this apparatus, of producing the one important function of the Gullborg device; that is to say, this apparatus cannot produce the cleansing vacuum or any vacuum whatever, at any point, or in any position, because in this combination of apparatus there is no means whatever provided or available for relieving the pressure of the lubricant existing within all parts of the apparatus prior to the act of uncoupling the compressor part from the grease cup fitting.

In reading claim 14, a correction is made of the last word which is the word "pump." It is obvious that this word is

an error and it was intended to be the word "cup." So reading Claim 14 with the word "cup" substituted for "pump" everything applying to Claim 15, applies exactly the same to Claim 14, and in fact the only difference between those two claims is a slight difference of wording in regard to the real element which is described in those claims, namely, the grease cup.

In the Zerk patent in suit there is disclosed a compressor and grease cup or fitting or lubricator, for lubricating bearings of machinery. In this apparatus, a joint is made between the compressor and the grease cup by the mere contact of the nozzle of the compressor with the grease cup, under the influence of the pressure of the hand of the operator.

The nozzle of the Zerk compressor is provided with a specially shaped surface at the end, intended to contact with the grease cup, and Zerk shows this feature in various forms, including a concave, spherical contact surface, a [fol. 240] spherical convex surface and a circular edge contact surface. The grease cups of Zerk, in accordance with these variations of the nozzle contact surface, vary in design correspondingly. Thus, where he uses a concave spherical surface in the nozzle, he provides a circular external edge on the projection of the grease cup. Where he uses a convex spherical surface on the nozzle, he uses an internal edge in the grease cup. Where he uses a circular external edge on the nozzle, he uses a concave spherical surface in the grease cup fitting, the surface being provided for the purpose of making a tight joint against the leakage of lubricant, under pressure, when the apparatus is in use.

A copy of the Zerk patent in suit was introduced in evidence as Defendant's Exhibit No. 42.

A device was submitted to the witness, who stated that it is substantially the compressor device of the Zerk patent.

The nozzle of this compressor has, in its outward end, a substantially concave spherical surface adjacent to the lubricant orifice, evidently intended for contacting with something, there being no other means of connection shown.

On the handle of this device are found the words: "Made by the Allyne-Zerk Co., Cleveland, U. S. A." and on the body are found "No. 6-D Automatic; Patented Dec. 4, 1923; Other Patents Pending; Directions: Use soft grease, pack

in solid to prevent forming air pockets. Press nozzle against nipple and repeat if necessary; Mfg. by The Bassick Mfg. Co., Chicago, U. S. A."

The device so identified was introduced in evidence as Defendant's Exhibit No. 43.

Another device was submitted to the witness, who stated that it is a physical embodiment of the grease cup, lubricator or fitting or nipple of the Zerk patent. It is the grease cup or nipple of Figure 1, Figure 2 and Figure 3 of the drawing of the Zerk patent.

The Zerk type device so identified was introduced in evidence as Defendant's Exhibit No. 44.

Another device was submitted to the witness, who stated that it is a substantial duplicate of the previous device, with the exception that it is cut open or sectioned.

[fol. 241] This last device was introduced in evidence as Defendant's Exhibit No. 44-A.

Another device was submitted to the witness, who stated that it is a duplicate of the nozzle found on the Zerk compressor Exhibit No. 43, with the exception that it is cut open or sectioned.

This last device was introduced in evidence as Defendant's Exhibit No. 43-A.

Another device was submitted to the witness, who stated that it appears to be designed as a nozzle for a lubricating apparatus somewhat similar to, though varied from the nozzle of the Zerk compressor.

Q. 269. Please point out wherein this device differs from the Zerk nozzle in essential or vital respects.

By Mr. Hansmann: I object to the question that the witness has not testified that the device differs in essential or other particulars from the Zerk patent, and the question was therefore drawing an inference which was not originated by the witness.

By Mr. Kalish: I will now ask to have the witness' last answer read. (Answer read.)

It appears to me that the witness has given his opinion to the effect that the device in question varied from the corresponding device in the Zerk patent. In view of this

it seems entirely proper to ask the witness wherein this device varies or differs from the corresponding device of the Zerk patent, and I will ask the witness therefore to answer just that, but I will also ask him to have particular reference to variations or differences which he might consider material or essential.

A. The variation that I referred to in my previous answer, is a material variation, inasmuch as this nozzle has no spherical shape which might be used in the same way as the spherical contact surface of the nozzle of the Zerk compressor. The only surface that might be used in this nozzle as a contacting surface is not spherical but conical; this difference constituting a very material distinguishment between this nozzle and the Zerk spherical surface nozzle.

The device so identified by the witness was introduced in evidence as Defendant's Exhibit No. 45, Defendant's con-
[fol. 242] tact nozzle, subject to further identification of this device as to its origin.

Another device was submitted to the witness, who stated that it appears to be a true duplicate of the last nozzle, Defendant's Exhibit No. 45, sectioned, however.

The sectional duplicate of Exhibit No. 45 was introduced in evidence as Defendant's Exhibit No. 45-A.

As the principal function of the spherical, metallic contact surface and the circular, metallic contact edge which Zerk employs as the connecting means between compressor and grease cup, he describes and shows in his patent, the capability of his nozzle and grease cup nipple when contacted together to provide and maintain an effective pressure-tight joint at almost any practical angle, and in fact, at very considerable angles of relation of the axis of the compressor nozzle to the axis of the nipple, whereby it is evidently unnecessary in the use and operation of the device to maintain any very close axial relation of these parts. In fact, he shows and describes a very wide variation.

Zerk's theory of a combination of a spherical contact surface and a circular contact edge for obtaining contact at a variety of angles is based on correct scientific principles. The principle is the fact that a cylinder circle surface contacting with an embracing concave spherical surface will make a continuous contact with that spherical sur-

face, irrespective of the actual sector of the spherical surface that is engaged by the cylinder circle surface. Thus, since there is perfect contact between these two surfaces, at all points of the sphere or parts of the sphere surface, a pressure-tight joint is possible of maintenance. In this case, this pressure-tight joint is possible of maintenance when the compressor nozzle is held at widely varying angles, in relation to the fitting or nipple.

A drawing was submitted to the witness, who stated that it aptly and fairly represents, on an enlarged scale, the contact nozzle and the grease cup disclosed in the Zerk patent.

The drawing was offered in evidence as Defendant's Exhibit No. 46, with the provision that a photostatic copy of this drawing may be substituted.

By Mr. Hansmann: I object to the admission of this [fol. 243] drawing, on the ground that it has not been sufficiently identified by the witness.

Q. 275. Mr. Gibson, just state briefly what part of the drawings of the Zerk patent is portrayed or reproduced substantially in this drawing, Exhibit No. 46.

A. The grease cup or nipple of the Zerk patent drawing is reproduced in this drawing, with the slight difference that the nipple of the drawing is not entirely sectioned. The co-acting nozzle of the drawing is the same as the nozzle of the Zerk patent drawing as far as the relation of the two part are concerned, and this drawing fairly and properly represents the relation of the Zerk nozzle and the Zerk nipple, as related in use.

Q. 276. Mr. Gibson, which of the several forms of nozzles and nipples shown in the Zerk drawings, does this drawing represent?

A. It represents the nozzle and nipple shown in Figures 1, 2 and 3 of the Zerk patent drawings.

The Zerk nipple in evidence as Defendant's Exhibit No. 44 was placed with the defendant's nozzle (in evidence as Defendant's Exhibit No. 45) in operative relation. The contact between the two consists of an exterior circular line on the nipple, and a cone surface on the nozzle.

Q. 278. Mr. Gibson, I now hand you a drawing and ask you to state whether this drawing fairly represents the

Zerk nipple before you as a physical exhibit No. 44 and the defendant's contact type of nozzle before you as Exhibit No. 45, and whether this drawing likewise correctly represents the relation of the two when in operative contact with each other.

By Mr. Hansmann: I object to the question. The question is so stated as to present to the witness the conclusions which it is desired he shall reach, and does not permit the witness to impartially examine the drawing and reach his own conclusions relative to the showing thereof.

By Mr. Kalish: I will let the question stand and will ask you, Mr. Gibson, to answer it, taking sufficient time however, first, carefully to examine the physical exhibits of Zerk nipple and the defendant's contact nozzle as well as the drawing before you.

A. This drawing quite effectively represents the physical [fol. 244] example of the nipple of the Zerk apparatus, and also the nozzle of the Defendant's Exhibit No. 45, and it also correctly represents the contact relation between these parts.

The drawing so identified was offered in evidence as Defendant's Exhibit No. 47.

When the defendant's contact nozzle (Defendant's Exhibit No. 45), is in contact with the Zerk nipple (Defendant's Exhibit No. 44) so that the axis of the nozzle corresponds very closely with the axis of the nipple, a fluid-type joint would be attained, and on account of the rounding of the contacting edge of the Zerk nipple it would be possible to maintain a fluid-tight joint of these contacting parts if the axis of the nozzle were moved to a very slight degree or to a very slight angularity to the relation with the axis of the Zerk nipple, but such a fluid-tight joint would not be mainatined if the axis of the nozzle were moved very materially or to a great degree from the axis of the nipple, on account of the shape of the related contact surfaces—the nozzle not being provided with a spherical contacting surface. The fact that this nozzle is provided with a conical contacting surface introduces a geometrical law, which provides that a circle and a cone cannot be in material contact with one another when the axis of the cone is out of line with the axis of the cylinder of which the circle forms a

part. In this case, the rounding of the edge of the nipple contact surface permits a very slight displacement of the axis of the nozzle, and the maintenance of a pressure-tight joint within those limits, in practice.

The shape of the intersection of a sphere by a plane is circular. The shape of the intersection of a cone by a plane is elliptical under all conditions, except when the axis of the cone is at right angles to the plane. Then the intersection is circular. These geometric propositions have a bearing upon the formation of a seal between the Zerk grease cup of the Zerk patent and the contact nozzle of Zerk and the defendant's contact nozzle.

In the Zerk contact seal, shown in the Zerk patent, there is embodied the geometric proposition of a plane cutting a sphere.

In the fluid seal or contact seal established between the Zerk nipple of the Zerk patent drawing and the defendant's contact type of nozzle there is embodied the geometric proposition of a plane cutting a cone.

In the combination of defendant's contact type of nozzle [fol. 245] with the physical Zerk nipple in evidence, there is embodied the geometric proposition of the plane cutting a cone, modified by the fact that the Zerk nipple, in order to conform to the theory of a plane, would have to have a sharp theoretical and impractical external edge.

The Zerk type nipples in evidence, have a rounded edge of spherical section, approximately.

Claim 2 of the Zerk patent does not read upon any apparatus consisting of this pump and defendant's contact nozzle, under any conditions and including when that nozzle is contacted with the Zerk nipple, because certain elements of the claim are not present in this combination of parts. The elements which are not present are "the nozzle contact face having a concavely spherical surface." This element is not present in the nozzle of this apparatus, the "other contact face having a dirt cutting circumferential edge portion adapted to be embraced within the spherical surface of the nozzle fact." This element is not present in the apparatus inasmuch as there is no contact face having such a dirt cutting circumferential edge portion embraced within a spherical surface, there being no such spherical surface there. The next element of the claim which is not present is the contact between the nozzle and the receptacle element

or nipple "from any one of a plurailty of angularly different directions to make a sealed lubricant conducting connection between the face openings."

Claim 3 does not read upon this apparatus, to wit: one of the defendant's pumps (Exhibits Nos. 6-A or 8-A), the defendant's contact nozzle and the plaintiff's Zerk type of nipple, inasmuch as there is in that apparatus no contact face having a concavely spherical surface; there is no contact face having a dirt cutting circumferential edge portion adapted to be embraced within the sperical surface of another face, and there is not, in this apparatus, provided a contact between the faces when the nozzle is pressed against the receptacle from any one of a plurality of angularly different directions to make a sealed lubricant conducting connection between the face openings. Claim 5 does not read upon this apparatus because the nozzle contact face has no concavely spherical surface. The receptacle contact face is not received within and does not engage a concavely spherical surface of the nozzle face because of the absence of that spherical surface, and the receptacle contact face has no dirt cutting circumferential edge portion and the receptacle contact portion does not [fol. 246] make and maintain a sealed lubricant conducting connection between the face openings from any one of a plurality of angularly different directions, as directed by this patent.

A copy of United States patent issued to C. F. Wallace for a Grease Container, No. 1,494,652, dated May 20, 1924, was then submitted to and identified by the witness.

This patent discloses a compressor and a grease cup or nipple, for use in lubricating parts of machinery by hand, and is of the contact type; that is to say, the connection between the compressor and the nipple is made by hand pressed contact.

The contact nozzle of the Wallace compressor is made of incompressible material and its contact face is in the form of a cone.

The lubricant receptacle or nipple of Wallace is provided with a closure, and its contact surface is provided for cooperation with the nozzle contact surface, rounded generally, or spherical.

The defendant's contact nozzle, in evidence as Defendant's Exhibit No. 45, is substantially an embodiment of part of the device shown and described in the Wallace Patent. It is an embodiment of the conical contact surface of the Wallace.

The defendant's contact nozzle, in evidence as Defendant's Exhibit No. 45 and No. 45-A is a substantial embodiment in all material respects, of the contact nozzle shown in the Wallace patent and designated in the patent drawing of Wallace by the numeral 14.

A copy of the Wallace patent No. 1,494,652 was introduced in evidence as Defendant's Exhibit No. 48.

A copy of the Wallace Reissue patent No. 16,787, dated November 22, 1927 assigned to the Bassick Mfg. Co. was introduced in evidence as Defendant's Exhibit No. 49.

A copy of the British patent to Clarkson, No. 6940 of 1904, was submitted to the witness.

There is disclosed in this patent a contact joint in which the one part has the form of a cone and the other part has the form of a sphere, for the connecting of a compressor to a nipple or fitting may be part of an apparatus to be lubricated.

Clarkson discloses more particularly, a contract joint of the cone and sphere type, applied in his case, for the purpose of making a pressure-tight joint between the [fol. 247] nozzle of an air pump and the nipple of a fluid reservoir tank, that nipple being provided with a check valve and a hand shut-off valve for retaining the air within the tank after the act of compression. The joint is described as being effective against the loss of pressure at the joint during compression, and as providing a large degree of variation of the axial relation of the compressor to the axis of the conical part of the joint, and it is further stated that this joint is unlikely to become defective in use.

Considering the fluid conducting seal or joint, disclosed by Clarkson, and the form of fluid conducting seal or joint established when the defendant's cone type of contact nozzle on the end of the pump, in evidence as Exhibit No. 45, is applied to the Zerk nipple, in evidence as Exhibit No. 44, the character of the parts of these two joints is substantially alike. There is a reversal of the functioning parts of the joint, inasmuch as Clarkson has a spherical

surface on the nozzle of his pump which is convex spherical, and correspondingly Clarkson's nipple is cone shaped; whereas in defendant's nozzle a cone is used for co-operation with the spherical surface of the Zerk nipple. This is a mere reversal of the two parts and without effect upon the functioning parts.

The fluid conducting seal or joint of Clarkson is capable of a swivelling action, that is, a variation of the angular relation of the two parts so joined temporarily, as described in his specification and shown in his drawing.

A copy of British Clarkson patent No. 6940 of 1904 was introduced in evidence as Defendant's Exhibit No. 50.

A copy of the Manzel patent No. 1,459,662 of 1923 was submitted to the witness. This patent discloses a lubricating apparatus for lubricating various machinery, having a compressor and particularly a hand pressed contact joint between a check valve nipple and the nozzle of the compressor.

The principal difference between the Manzel and Zerk patents is in the use by Manzel of a compressible washer for the contacting surface of his nozzle; otherwise, fundamentally there is no difference.

The lubricating system or apparatus of Manzel could aptly be characterized as a lubricating system comprising a plurality of similar valved grease cups or nipples, stationarily affixed to the bearings, and a common portable [fol. 248] lubricant compressor having a discharge nozzle adapted to establish a temporary connection with any one of the nipples, by mere manual pressure produced contact. Both apparatus serve the same purpose in the same manner.

Copy of the Manzel patent No. 1,459,662 was introduced in evidence as Defendant's Exhibit No. 51.

A copy of the United States patent No. 499,541 issued to Hay & McIntyre, June 13, 1893, was handed to the witness who stated that particularly in lines 74 to 110 inclusive on page 3 of the specification, and Figures 2, 16, 25 and 26 of the drawings there is disclosed a device for lubricating bearings of a machine, especially such bearings as reciprocate in their operation, and there is provided, attached to such a bearing a nipple or lubricant receptacle having a concave spherical surface as a guide

portion for engagement with a convex spherical nozzle of a lubricant compressor pump, which pump is so disposed in relation to the reciprocating bearing and its nipple that when that bearing and nipple approaches the pump nozzle, the pump nozzle will be automatically guided into correct contact relation with the nipple and when that contact is made between the contact edge of the nipple and the convex spherical pump nozzle, a fluid pressure-tight joint is formed and the further movement of the bearing and its nipple produces operation of the compressor, thereby lubricant is forced from the pump compressor into and through the nipple into the bearing.

Q. 310. I now hand you a device and ask you please to examine it and then to state whether it is a true and correct physical embodiment of the pump construction shown in Figures 25 and 26, as well as in Figure 16, in all material respects.

By Mr. Hansmann: I object to the defendant's line of questioning. All of the questions are leading and in effect result in the testimony being given by the defendant's attorney instead of being the independent testimony of the witness.

A. It is a correct physical embodiment of the compressor of this patent.

By Mr. Kalish: I now offer in evidence the Hay & McIntyre patent No. 499,541, and ask to have it designated as Defendant's Exhibit No. 52, and I offer in evidence the [fol. 249] last device identified by the witness and ask to have it identified as Defendant's Exhibit No. 53, the Hay & McIntyre Lubricant Pump.

Another device was submitted to the witness who identified it as true embodiment, in all material respects, of the lubricant receptacle of Hay & McIntyre, shown in Figure 26.

The last device identified was introduced in evidence as Defendant's Exhibit No. 54, Hay & McIntyre Lubricant Receptacle.

The contact between these two parts (the Hay & McIntyre pump, Defendant's Exhibit No. 53, and the Hay & McIntyre lubricant receptacle, Defendant's Exhibit No.

54), is a line contact or a sharp edge contact formed of the intersection of a concave sphere and the cylindrical bore of the lubricant receptacle with the convex spherical surface of the nozzle of the pump or compressor. When the joint between the two parts is completed, the contact is between the sharp edge referred to and the spherical nozzle of the pump.

The concave surface of the lubricant receptacle of Hay & MyIntyre is not a contact surface in the operation of lubrication, but it does serve the purpose of a guide to insure that the pump nozzle shall correctly contact with the edge of the lubricant receptacle, irrespective of any slight displacement of the axial relations of the two parts as they approach one another. It insures that the pump nozzle and the nipple or lubricant receptacle will arrive at correct inter-relation for the purpose of lubrication.

Each and every one of the elements of claim 4 of the Zerk patent is present in the Hay & McIntyre disclosure, particularly in Figure 26.

The Hay & McIntyre compressor with a convex spherical nozzle is adapted for a swiveling connection with the lubricant receptacle of Hay & McIntyre.

Q. 317. Is it capable of forming a good fluid connection when the Hay & McIntyre lubricant pump is placed at a plurality of angularly different directions, with respect to the lubricant receptacle?

By Mr. Hansmann: I object to the question, as defendant's attorney is continuing to dictate the testimony instead of obtaining the testimony of the witness himself.

[fol. 250] A. It is.

In the Hay & McIntyre device, the pump or lubricant dispenser is necessarily and in cases, designedly mounted in positions where it can be flimsily supported or supported in such a manner that it may move slightly laterally to the axis of the pump and consequently when that pump or lubricant dispenser happens to be in such a position that its axis does not correspond with the axis of the nipple or lubricant receptacle, the provision made by Hay & McIntyre for overcoming this difficulty, namely, the concave spherical surface of the lubricant receptacle and the convex spherical surface of the pump nozzle, accomplishes the object of forming a pressure-tight joint between the parts,

irrespective of the exact relation of the lubricant dispenser to the nipple.

The spherical concave surface was provided for the first contact of one part with the other, and as a guide for directing the concave surface of the pump nozzle to its correct lubricating position, that is to say, to guide the pump nozzle into contact with the sharp edge of the conduit of the nipple. The nipple is the lubricant receptacle G4 of Figure 26 of the drawing of the Hay & McIntyre patent.

The swivelling capacity between the pump and the receptacle is provided because the pump may be supported so that its axis is out of line with the axis of the receptacle. Consequently its nozzle is out of line with the axis of the receptacle and must be brought into coinciding relation with the edge of the opening in the receptacle, in order that a pressure-tight joint may be present. When the pump nozzle is so brought into coinciding relation with the lubricant receptacle, the axis of the pump itself may be at a considerable angle to the axis of the nipple and still maintain a pressure-tight joint against leakage of the lubricant being forced therethrough.

The lubricating system or plan of Hay & McIntyre would not be practicable without the swivelling sealing contact between the pump and lubricant receptacle, and in fact this swivelling relation of the pump and the receptacle forms an important feature of the patent of Hay & McIntyre.

If the pump of Hay & McIntyre were detached from i-s support and used merely manually, it would function in exactly the same manner as the pump of the Hay & McIntyre Patent, with the added feature that when the pump was held in the hand it could be applied to a nipple at- [fol. 251] tached to a bearing which did not reciprocate, and in such case, the reciprocation necessary for the operation of lubricating the bearings would be provided by the movement of the hand in pushing the pump into contacting relation with the nipple, and of course, in this case it is obvious that some reservoir of oil would be attached to, form a part of the pump. Such a hand operated pump would have all the advantages possessed by the fixed pump, in regard to the flexibility of its axial relation to the nipple or lubricant receptacle during the act of lubricating.

The similarity between the Hay & McIntyre contract seal and the Zerk contract seal is that both use a spherical surface for one contact face and the sharp edge for the other contact face, that sharp edge being provided for the purpose of automatically removing dirt, waste, or other material from between the contacting faces, so as to permit a fluid-tight and pressure-proof joint to be maintained during the act of lubrication. In this respect, these two devices are exactly similar and accomplish the same object in the same way. The only difference between these joints is that in the case of Zerk, he chose to use a concave spherical surface for the one member of his joint, and May & McIntyre chose to use a convex spherical surface for that member of their joint. The principle involved in each of these joints is exactly identical.

There is no difference whatever in principle or effect or operation in the circular edge portion of the seal of Hay & -Intyre and of Figure 5 of Zerk are exactly similar, both in principle and design.

The pump nozzle of Hay & McIntyre is of convex spherical form; so also is the pump nozzle of Figure 5 of Zerk. The nipple or lubricant receptacle of Hay & McIntyre has an internal circular edge for contacting with and forming a lubricant seal with the convex spherical nozzle of the pump; and so exactly similarly has the nipple or lubricant receptacle of Figure 5 of Zerk and internal circular edge. The Hay & McIntyre contact seal permits the dislocation of the nozzle axis axially in relation to the axis of the nipple or lubricant receptacle; and so exactly similarly does the Zerk. The Hay & McIntyre nipple or lubricant receptacle has a sharp dirt cutting edge; and so has the nipple of Zerk.

The Zerk lubricant receptacle (in Figure 5 of Zerk) is provided with a guiding surface of cone shape, serving to guide the nozzle of the pump into its correct relation with [fol. 252] the nipple, for the formation of a pressure-tight joint and this guiding surface serves the same purpose and functions in the same manner as the concave spherical guiding surface of the lubricant receptacle of Hay & McIntyre.

An average mechanic would not even have to go so far as to design such a variation of Figure 5 of Zerk, because it would naturally occur to him that those parts were revers-

ible; having the thought of a sphere and a cutting edge, he would exercise a natural choice in the matter and so, for certain of his purposes, would reasonably reverse the positions of these two elements of the joint.

The United States patent No. 1,400,871 of December 20, 1921, issued to Crotty, discloses an oil cap or lubricant receptacle or nipple, for the purpose of lubricating parts of machinery.

The United States patent to Crotty No. 1,400,871 of December 20, 1921 was introduced in evidence as Defendant's Exhibit No. 55.

Q. 332. Mr. Gibson, I now ask you to compare the drawing of Crotty's device with the lubricant receptacle shown in Figure 3 of the Zerk patent, and to point out whether these two devices are in any way similar, and if so, point out also what structural elements or features are common to these two devices.

A. The lubricant receptacle of Figure 3 of the Zerk patent, and the Crotty oil cap are alike in general design, in purpose and in structural detail, inasmuch as they both serve exactly the same purpose as lubricant receptacles for oiling bearings of machinery and they are both provided with check valves or closures at their outward ends, which closures are spring-pressed against an internal flange, and they both have exterior circular edges at their orifices.

A drawing was submitted to the witness who stated that it shows very good reproductions of the Crotty and the Zerk oil cup or nipple.

Q. 334. Mr. Gibson, could the device of Crotty be used in combination with the lubricant dispensing pump of Zerk, having The Zerk nozzle shown in Figure 3 of the Zerk patent, without in any way altering the resign, form or [fol. 253] construction of the Crotty device, other than to reduce its size in proportion to the particular size required?

By Mr. Hansmann: I object to the question on the ground that it is leading and is in effect the testimony of the attorney and not that of the witness. As defendant's attorney continues to proceed in asking this type of question, in spite of the repeated objection raised by plaintiff's counsel, I hereby make this objection a standing objection to this type of question, this standing objection to apply to all questions of this kind throughout the testimony.

By Mr. Kalish: The preceding question is considered to be entirely proper and in good form, and is for the purpose of eliciting from defendant's mechanical expert witness, whether in his opinion, the Crotty device could serve the same purpose, or could be used in the same way as the Zerk lubricant receptacle or nipple shown in Figure 3 of the Zerk patent, without altering the design or shape of the Crotty device but merely varying its size. It seems that the defendant's mechanical expert witness is qualified to give his opinion as to the capacity for use of a prior art device and it cannot be seen how this information can be elicited from the witness, except by a question directed to this point, which is all that the question objected to is in this case.

Q. 335. Mr. Gibson, will you kindly answer the question?

By Mr. Hansmann: Plaintiff's attorney has no objection to any proper question being asked the witness and it is not my intention to attempt to limit the scope of defendant's testimony by objecting to this or other similar questions. In connection with previous questions of this nature I have pointed out the manner in which these questions could be asked in a proper manner, without in effect dictating the answer to the witness, and for the information of defendant's counsel, I will rephrase the present question in what I consider a proper form. The question as rephrased is: "Mr. Gibson, if any attempt were made to apply the Zerk nozzle shown in Figure 3 of the Zerk patent, to the nipple shown in the Crotty patent, state what conditions would obtain, and how these devices would cooperate." Plaintiff's attorney feels that the persistance of defendant's counsel in continually submitting lead ques- [fol. 254] tions of the type objected to by plaintiff's attorney, is based on a well organized plan of action, with the object of leading on the witness and avoiding any possibility of straying from the desired answer of failing to give the desired answer. This feeling is strengthened by the testimony given by the witness concerning the shape of the intersection formed by a plane and a cone, and a plane and a sphere. In testifying on this point, the witness was not lead along by the nature of the questions asked, and as a result he failed to give answers which were correct or desired, and in order to correct this mistake by the witness

it was necessary for defendant's counsel to propound additional questions, which indicated the inaccuracy of the statements made by the witness, and permitted him and in fact taught him how to correct these inaccurate statements.

By Mr. Kalish: It is not my purpose unnecessarily to answer plaintiff's objections, particularly objections made a day or more subsequent to the questions and answers, but it might be well to note here that the particular previous testimony of the witness to which plaintiff's counsel refers, relates merely to geometric propositions, the correctness of which a Court may take judicial notice of, without even any testimony relative to it. Any standard text book on solid geometry will be ample warrant for taking judicial notice of the two geometric proposition- sought to be covered by the testimony particularly referred to, to-wit: the first geometric proposition that every intersection of a sphere by a plane is a true circle, and the second geometric proposition that a plane intersecting a cone will produce a true circle only when the plane is at a right angle to the axis of the cone, and that if the plane is at any other angle, the intersection will be a shape other than a true circle. Hence the witness' momentary and apparently inadvertent mistake as to the second proposition is of absolutely no consequence or import, because as geometric propositions, these matters may be taken judicial notice of. I will now ask to have the last question read and ask Mr. Gibson to answer it.

(Question read.)

By Mr. Hansmann: Plaintiff's objection to this question stands.

[fol. 255] A. Since there is no specification in the Crotty patent as to the size of his nipple or lubricant receptacle, it is obvious that a mechanic making such nipple would use his own judgment as to the size, but would retain the general conformation or design of the nipple and in so doing he would produce a nipple which would be entirely usable with the Zerk pump and nozzle of Figure 3 of the Zerk patent, and such a Crotty nipple would co-operate with that pump nozzle for the purpose of lubricating machinery.

If Crotty's device were reproduced of a size corresponding to the Zerk nipple it would be in every way just as capa-

ble of all the functions and uses of which the Zerk nipple is capable when the Zerk pump and nozzle is applied thereto, as the Zerk nipple.

The physical or mechanical principle employed by Gullborg in his endeavor to provide a cleansing vacuum effect is the change of pressure incident to a change of volume of a fluid container. In this case, the fluid container is the coupler, conduit and pump of the Gullborg compressor, wherein he arranges to change the volume by the movement of his cup washer during the act of uncoupling the female coupler from the male grease cut fitting. This change of volume is provided by the inclined relation of the part of his bayonet slot referred to in his drawing by the number 23, to the part of his slot referred to in that drawing by the number 22, without which inclined portion of slot his device would be incapable of performing the motions to which he ascribes the production of his theoretical cleansing vacuum.

The slot in the defendant's coupler is not disposed in an inclined manner, or in the manner of the Gullborg slot.

The occurrences taking place in the Gullborg patent coupler when uncoupling are best stated by the wording of the specification of the Gullborg patent. The first movement referred to in the specification is intended to produce a greater compression within the conduit than existed prior to that movement, whereby, according to Gullborg, some further quantity of lubricant is forced out of the compressor and its parts and into the grease cup or fitting. When this action has been supposedly completed the second movement referred to occurs and is supposed to result in the [fol. 256] production of vacuum within the coupler, by reason of the change of volume of the grease-containing parts. It is evident that the second movement cannot accomplish its object without the concomitant first movement having been accomplished.

The inclined portion of the slot actually has the effect of making the operation of disconnecting the female coupler from the fitting more difficult, and with the higher pressures in use in the lubricating of bearings it becomes practically impossible to remove the female coupler from the grease cup, without the aid of extraneous machinery such as pliers, Stillson wrenches, or the like, and when such ex-

traneous tools are used, the effort to uncouple may and does result in the unscrewing of the grease cup fitting from the bearing to which it should be attached. This condition also may, and does result in the necessity for relieving the pressure by some means within the compressor, so as to uncouple the two parts of the coupler to be disconnected without derangement, or it is otherwise necessary to take further tools and hold the grease cup fitting against rotation while putting tremendous force upon the female coupler to disengage it from the grease cup.

The movable cup-shaped washer of Gullborg is an excellent means of forming a fluid-tight joint and it was so chosen by both Seng and Barcus for that purpose.

Seng and Barcus use a cup-shaped sealing gasket for the purpose of making a tight seal against the loss of lubricant under pressure, in exactly the same way as Gullborg uses it. They do not, however, attribute any theoretical vacuums to its use.

There is no reason at all why Barcus should not have claimed a vacuum for his cup-shaped washer, spring-pressed as it is in exactly the same way as in Gullborg, and he could still have done so. He certainly had the apparatus there which might have produced just as much theoretical vacuum as may be producible in Gullborg.

The pronounced and definite purposeful inclination of the Gullborg slot is a distinct and unqualified disadvantage in the lubrication of the bearings of machinery, inasmuch as it is an offset to the use of extremely high pressures such as are frequently necessary, and it causes a definite amount of waste of time, particularly in the act of uncoupling and especially when using particularly high pressures.

[fol. 257] The approximate pressure that could be produced in the lubricant dispensing compressor shown in the Gullborg patent and exemplified in the plaintiff's Gullborg-Alemite compressor, defendant's Exhibit No. 7 is about five hundred pounds per square inch, depending upon the strength of the operator, but it requires a strong man to get five hundred pounds.

Five hundred pounds pressure is certainly not a high pressure in the lubrication of bearings, and not sufficient for all purposes in lubrication of bearings, particularly when they are tight or clogged. Pressures as high as ten

thousand pounds are at times essential for the proper lubrication of certain bearings, in certain conditions.

Testing the pressure capacity of the Alemite compressor, exemplifying the compressor of the Gullborg patent, the witness succeeding in raising two hundred pounds pressure per square inch with the Alemite compressor, Exhibit No. 7.

Testing Exhibit No. 2, Alemite Service Compressor, the witness raised a pressure of twenty-two hundred pounds pressure per square inch. With the defendant's compressor, Exhibit No. 6, the witness attained a pressure of five thousand pounds per square inch. With the compressor, Defendant's Exhibit No. 8, the witness raised the pressure of about five thousand pounds per square inch.

In each instance the female portion of the coupling of the compressor was coupled to a grease cup fitting, forming part of the conduit leading to two hydraulic pressure guages, one of which has a scale reading to a maximum of one thousand pounds per square inch, the other of which has a scale reading to a maximum of ten thousand pounds per square inch. These two gauges may be used together or the one having the higher scale reading may be used separately, owing to the provision of the stopcock in the line having the lower gauge maximum reading.

The Alley compressor, defendant's Exhibit No. 20, with the bayonet catch female coupler was applied to the Alemite grease cup fitting that was used in the previous tests and with this Alley gun, the witness raised a pressure of three hundred pounds per square inch.

The Dot compressor was applied to its related grease cup fitting and with this Dot compressor the witness raised the pressure of seven hundred pounds per square inch.

[fol. 258] Defendant's counsel also introduced in evidence the United States patent to Seng, No. 1,322,357 of November 18, 1919, as defendant's Exhibit No. 56. Defendant's counsel also introduced in evidence a device designated as the O. K. Screw type of hose and coupler as Defendant's Exhibit No. 57 herein. This device is submitted as a duplicate of plaintiff's Exhibit No. 109 in the case of Bassick vs. O. K. Mfg. Co., Equity 79, U. S. District Court, Southern District of Ohio, Western Division. The physical exhibit submitted herewith is also Defendant's Exhibit B accompanying the Jones affidavit in the case entitled: Bassick v. Frank Miller, Equity 2759, U. S. District Court, District of

New Jersey. The submission of this exhibit is subject to the same qualification as was the submission of Defendant's Exhibit Nos. 16 and 20.

Defendant also introduced in evidence a drawing of this O. K. screw type coupler as Defendant's Exhibit No. 58.

Upon cross-examination, Mr. Gibson testified as follows:

In the recent tests of the compressor forming Exhibit No. 6 he operated this compressor by placing it on the floor using both hands and putting his whole weight on it. Before he could remove the coupler 6-C of this compressor from the fitting at the completion of this test he found it convenient to release the pressure and did so. Mr. Gibson tried to remove the compressor before releasing the pressure. He might have been able to do so if he had applied greater force, but it was more convenient to release the pressure. He did not apply his total strength to release this coupling. He tried a couple of times to remove the coupling before he released the pressure.

Mr. Gibson, in operating the reciprocating pump 8-A of the large service compressor forming Exhibit No. 8, likewise placed this pump on the ground and used both hands to operate the lever, and also applied his weight to this lever. Likewise, at the completion of this test he released the pressure before he removed the coupling.

The portable, or in fact any compressor is well disclosed in the Seng patent, Defendant's Exhibit No. 29, to any one having any knowledge of this art whatever in the wording of the lines 24 and 25, as follows: "This instantaneous joint is more particularly applied in the case where it is desired to have forced lubrication with oil, grease and so on." This [fol. 259] wording obviously includes the parts which are necessary to provide the desired forced lubrication, otherwise the joint of this patent would be a particularly useless thing. It must be combined with a compressor in order to serve the purpose indicated. Such a compressor need not of necessity be portable. A portable compressor is one of the compressors that would of necessity be used, or of custom be used, in connection with the lubrication with oil and grease of automobiles, for instance.

The drawing of that British patent to Seng does not disclose a portable compressor. The term "portable compressor" possibly appears in the specification.

In considering this Seng British patent heretofore it was closely related by the witness, with the Seng French patent No. 468,869. In the translation of the specification of that French patent to Seng these words appear: "In such cases the coupling is connected to a tube of a pump which supplies the grease and can be fixed at will by moving the slide." This whole device is of the type which involves the use of a portable compressor and a number of grease cups or fittings attached to bearings, whereby a number of those fittings may be furnished with lubricant by a perambulatory compressor which in the very sense of the whole patent is essential to the device of that patent.

It would be possible to use a stationary compressor provided with a flexible hose having a device of the Seng patent at the end thereof to carry out the lubricating operation described by the Seng patent.

The Seng coupling disclosed in the French patent No. 468,876 is not necessarily used with a portable compressor, but by the same token it is used with a portable compressor, as very clearly shown in the publication "Omnia" in which the pictures and description all refer to the coupling with a portable compressor.

The "slide" referred to in the part of the specification of the French patent No. 486,869 above quoted, refers to a part of the coupling. It is a part which is moved in the operation of engaging the coupling to the fitting.

The witness found no specific disclosure in the French patent to Seng No. 468,869, incorporating the word "portable."

X Q. 20. Mr. Gibson, will you inspect the drawing and specification of the French patent of addition No. 20,083, and point out any part which specifically discloses a portable compressor?

[fol. 260] The witness found no such specific disclosure of a portable compressor.

X Q. 21. Mr. Gibson, I will have Q. 209 read to you and also your answer:

"Q. 209. Do they each disclose some portable grease dispensing device capable of forcing grease under pressure?

"A. They do."

Q. 209 is dependent upon Q. 206 which lists the following patents, to wit:

U. S. Patent to Laskey & Arnold of 1881;
French patent to Alley of 1906;
The French and British patent to Seng;
Seng's publication in Omnia;
Original and re-issue U. S. patents to Winkley;
The Gullborg patent in suit.

Mr. Gibson, it thus appears that you testified that the British and French patents to Seng disclose a portable compressor, does it not?

A. It does not. It refers to some portable grease dispensing device capable of performing an act in relation to the forcing of grease under pressure, and I have taken the common sense view that this coupling device would necessarily be connected with and used with a pump. Otherwise they would be useless devices, and the pump is assumed and referred to in the Seng patents, and is clearly shown in the Omnia Publication of Seng. It is obvious that these specific devices of Seng form an essential part of a lubricant dispensing apparatus. They in fact are in themselves lubricant dispensing apparatus in the same sense that the faucet of a fountain is a refreshment dispensing device, either with or without the remainder of the fountain and is intended to be connected with the remainder of the fountain for its purposes.

X Q. 22. Mr. Gibson, is there a reference to the publication Omnia in either of the French patents to Seng?

A. No.

X Q. 23. Then the disclosure of these French patents is not inclusive of or dependent upon the publication Omnia [fol. 261] but is entirely independent thereof, is it not?

A. I do not know; the date of the publication in Omnia is April 25, 1914, and the date of publication of the Seng French patent is the 18th of July 1914.

X Q. 24. Mr. Gibson, is it your idea that a patent includes, as a part of the disclosure thereof, publications which are not referred to in the patent?

A. No.

X Q. 25. Then what is the meaning of your answer to the previous question?

A. Just what I said, "I do not know."

X Q. 26. What part do the dates you mentioned play in that answer? That is, why were they included in the answer?

A. Because patents are supposed to be instruction to those skilled in the art to enable them to accomplish the objects of the patent, and if a French mechanic read the publication in Omnia regarding Seng's lubricator and observed the drawings of Seng's French patent, and read the reference to a pump contained in the specification of that drawing, he would be very well informed as to how to use this coupling, and in fact he would be very well informed as to how to use this coupling by the patent alone and without the Publication. But there is that relation for what it is worth.

X Q. 27. Mr. Gibson, the lubricant dispensing device in the Alley patent is shown as a portable device, is it not?

A. It would be considered portable on the face of it.

X Q. 28. The Winkley, Gullborg, Laskey and Arnold patent and the French publication Omnia, all disclose portable lubricant dispensing devices, do they not?

A. Yes.

X Q. 29. Mr. Gibson, in Q. 209 the British and French patents to Seng were grouped with other patents and a publication, and all of these other patents and the publication disclosed portable compressors, did they not?

A. I do not quite understand the question.

X Q. 30. I will put the question differently. In Q. 209 the French and British patents to Seng were listed with the Laskey and Arnold patent, the Gullborg and the Winkley patents, the British patent to Seng, and the French Pub- [fol. 262] lication Omnia. This French publication, and all of the patents except the patents to Seng specifically disclose portable compressors, do they not?

A. They do.

X Q. 31. Mr. Gibson, was it not your understanding that Q. 209 referred to portable compressors such as shown in this publication and these other patents?

A. I have before explained that it was not my understanding and that the question referred to "lubricant dispensing apparatus" I believe were the words.

By Mr. Kalish: It seems to me, that, from what I can remember of these various questions and answers in direct

examination, it would be very difficult for the witness, or any other witness, to recall the wording of the questions and answers given a day or two ago. It seems that whatever opinion plaintiff's counsel seeks to elicit from the witness could be obtained by questions directed or addressed to the subject matter of the desired information.

By Mr. Hansmann: The question and answer under discussion has just been read to the witness and there is no reason why he should not understand this question and answer.

X Q. 32. Mr. Gibson, do you recall referring to a coupler per se as a lubricant dispensing device anywhere in your testimony?

By Mr. Kalish: I object to that question because it seems to me that it is nothing more than a memory test. What plaintiff's counsel could do, it seems to me, would be merely to read the witness' previous testimony and ask him to verify it.

By Mr. Hansmann: The question stands.

A. I may have done, or I may not. I am not sure.

X Q. 33. Mr. Gibson, you did not frame the language used in Q. 209, did you?

A. I did not.

X Q. 34. Mr. Gibson, this language was framed by defendant's attorney, was it not?

A. It was.

X Q. 35. And you merely agreed to the question?

A. In order to answer your question, I asked that the Q. 209 and its answer be read.

[fol. 263] (Question and answer are read to witness.)

I answered the question responsively in the affirmative.

X Q. 36. Mr. Gibson, did you examine each patent referred to in this question thoroughly before you answered the question?

A. I did.

X Q. 37. Did you read the specification of each patent before answering the question?

A. I did. In parts, if not in whole.

Upon redirect examination, Mr. Gibson testified as follows:

The grease cup, (the lubricant receptacle) and the conduit coupler disclosed in Seng's French publication in Omnia, is substantially the same as the disclosure of Seng's British patent No. 3,028, and Seng's French patent No. 468,869; these illustrations and drawings being so alike that they might have been copied from one another.

These two Seng patents relate to the same subject matter as Seng's French publication in Omnia.

Testimony of Clifford L. Jones

On direct examination, CLIFFORD L. JONES testified as follows:

He is 37 years of age and resides in Manoa, Pennsylvania. He has been engaged in the sale, but not in the manufacture of lubricating apparatus. Originally his connection with lubricating apparatus, was selling the Alemite products with the Alemite Lubricating Co. of Eastern Pennsylvania. He has been service manager for the Vim Motor Truck. Operated a fleet of his own trucks for a period of over two years. Has been connected with the automobile trade since 1915, manufacturing truck and body parts. During his experience in the automobile trade since 1915 he has become acquainted with the various forms of lubricating equipment on the market, particularly for automobiles. First with the old oil cups, and then the Alemite and Zerk and Dot, and the various so-called gyp fittings, which is very similar to the Alemite.

He was connected with the Alemite Lubricator Co. of Eastern Pennsylvania approximately two years, as sales representative. He left the Alemite Lubricator Co. the 2nd [fol. 264] of October, about three months ago. His duties in connection with the Alemite lubricating equipment were selling the products in certain territories, attending the sales conferences and reading the literature they sent to their salesmen. The salesman was supposed to know the parts, study the sketches so as to familiarize himself with their operation and be able to go into a service station and correct any faults they might happen to find, any trouble the service station operator may have in operating the guns (Alemite compressors).

2
5
3

The Alemite Lubricator Co. supplied the salesmen with literature relative to the operation of any part of the equipment. In fact, every article that went out had a pamphlet relative to its operation.

The witness stated that he is familiar with the piece of apparatus known as the "Alemite H-15 Service Compressor."

A piece of apparatus was submitted to the witness who identified it as one of the H-15 compressors having brass gears instead of the usual steel gears and being in every respect the H-15 compressor and functions in every respect like H-15 compressors.

An envelope and some printed literature submitted to the witness, was identified as the usual form of printed instruction accompanying this type of Alemite compressor, aptly describing the construction and use of that particular Alemite compressor.

In connection with his field work, Mr. Jones witnessed the use and operation of this particular Alemite compressor as well as some of the other forms of Alemite compressors, and has operated the same himself.

To the witness there appears to be no cleansing action in the hose coupling at the end of the hose, (the part fastened on to the pin fitting). Personally, the witness does not think there is any cleansing or suction action of the hose coupling.

In the ordinary operation of the Alemite compressors of the various different types, including the "H-15" there is always grease left on the end of the coupler or on the pin fitting in normal use.

The witness in connection with the sales organization of the Alemite Lubricator Co. and also in his connection with the garage and automobile service trade has not had brought to his attention any cleansing action inherent in the coupler.

The operation of greasing an automobile is a rather dirty and mussy operation, decidedly. It is due to the natural condition of the car, and it is due to the fact that you are [fol. 265] using a lubricant or a grease which is naturally soily or sticky, whatever type of grease or lubricant you may be using; due to the fact that invariably there is a certain amount of grease with which you come in contact. The hose may be broken and get grease all over yourself from

that; no matter how careful you can be or how careful a garage man is, there is always dirt and grease around his pits, or around his racks, or around his gun.

Q. 27. Is the act of uncoupling the hose coupling from the fitting in itself a clean operation free of excess lubricant?

A. That can be answered "yes" and "no." The majority of times lubricant will ooze out of the side of the hose coupler. You saw me wipe it off when I put it on the fitting. I wiped it on the paper. Then it is the operation. That, I would say, is invariably true.

Q. 28. What do you have in mind when you say it might be a clean operation.

A. You asked me if removing the hose coupling from the pin operation is a clean operation, did you not? I gave my answer or reason for saying that it would not; and the reason for saying that it might, would be that if the operator would take the rag with him at all times and place it over the hose coupling when he released it then he would not come into contact with the lubricant. However, very few do that.

Q. 29. Then, is it your opinion that to maintain the greasing operation more or less cleanly it would be necessary to wipe off the hose coupling each time?

A. In my opinion, yes.

Q. 30. You stated that you attended various sales meetings and conventions during your capacity as sales representative of the Alemite Lubricating Co. Will you state whether at any of these conventions, or conferences, or meetings, or at any other time in your official capacity, you learned of a certain alleged suction function or self-cleansing action of the Alemite hose coupler?

A. I do not believe that I did. I did not.

There is a relation between the Alemite Lubricator Co. of Eastern Pennsylvania and the Bassick Manufacturing Co. of Chicago. The Alemite Lubricator Co. of Eastern Pennsylvania was owned and operated by officers of the Bassick Mfg. Co. The Alemite Lubricator Co. of Eastern [fol. 266] Pennsylvania is an official sales organization for the products of the Bassick Mfg. Co. of Chicago. The Alemite Lubricator Co. of Eastern Pennsylvania does not sell anything other than products of the Bassick Mfg. Co. or its associated interests.

Upon cross-examination, Mr. Clifford L. Jones testified as follows:

His present occupation is sales representative for The R. M. Hollingshead Co. He did not know that the Bassick Mfg. Co. were suing The R. M. Hollingshead Co. He understood that they were suing The Frank C. Miller Co. He does not know the connection between the Frank C. Miller Co. other than that Frank C. Miller products are manufactured by R. M. Hollingshead Co. He is not with the Frank C. Miller Co. but with the R. M. Hollingshead Co. He does not sell products of the Frank C. Miller Co. He is connected with the sales force of The R. M. Hollingshead Co. When he left the Alemite Co. he did not go direct to The R. M. Hollingshead Co. He did not go anywhere. He had about a week or more to himself. His next position, however, was with the Hollingshead Co.

His reason for leaving the Alemite Co. was that he thought his services with the Alemite people would be about sufficient. That was the main reason. In other words, he thought that the older men, he being the oldest of the salesmen, were about to be disposed of regardless of their ability. He thought that he would either be forced to resign or he would be discharged.

In operating the H-15 compressor he did not connect the coupling with a fitting.

Upon redirect examination, Mr. Jones testified as follows:

An automobile spring, mounted on shackles or bearings to which was attached a grease cup or pin fitting was submitted to the witness, who stated that it is an Alemite pin fitting or a grease cup of the Bassick Mfg. Co.

(The witness attached the H-15 compressor to the Alemite pin fitting fixed to the shackle bearing and forced lubricant through the bearing, and then detached the compressor from the bearing.)

The pump attached to the hose and after connecting the hose coupling to the pin fitting, pumping the lubricant through the hose, the lubricant was forced through the pin fitting into the shackle bolt until it oozed out around the shackle bolt, at which time the operator knows that there is sufficient lubricant. The pumping then ceased and the

[fol. 267] hope coupling was disconnected from the pin fitting.

After detachment, the hose coupling was oozing grease, and the pin fitting was practically covered with the grease.

The witness knows of no way of preventing the oozing out of the grease from the end of the hose coupling when it is uncoupled, or the free flow of grease in the apparatus in uncoupling. Such means would be a Godsend to the service men.

There is a method of releasing the pressure which causes the flow of that grease; but theory and practice are decidedly different. The method of releasing the pressure after you force your handle down in that manner, raising it up and turning your release valve which will leave the air out of the release valve, and by pulling the handle up in that manner as far as it will go will permit the air to be taken up in the valve chamber of the handle, but not sufficient to still take the air out of the hose or the pressure out of the hose sufficiently to prevent that slight leakage.

The witness attaches the H-15 compressor again to that same Alemite grease cup and bearing and operates it again, and then performs all those steps which might be taken to relieve the pressure before uncoupling. He placed the hose coupler on the pin fitting and pumped lubricant into the shackle bearing until sufficient lubricant had been placed in the shackle bearing. He then opened the release valve allowing certain amount of lubricant to come out or to be forced out by means of air pressure in the container; also lifted the operating handle to its full height in an endeavor to prevent the leakage of lubricant out of the hose coupling after being taken off the pin fitting. The witness then removed the hose coupling from the pin fitting and the lubricant still oozed from the hose coupler. The extrusion of grease from the end of the hose coupling was not any less at the second operation than it was at the previous operation.

Upon recross-examination, Mr. Clifford L. Jones testified as follows:

He does not consider himself a good salesman. His reply when the Bassick Co. sent out a pamphlet asking the salesman to make replies and on that pamphlet, the personal one of those questions was: "Do you consider yourself a fair

salesman or a poor salesman?'' He replied to that that he was a poor salesman, regardless of the fact that he stood second on the sales force.

He stood second on the sales force of the Alemite Co. [fol. 268] according to Mr. Higgins' records; that is, his blackboard records; not knowing what his other records are. Yet he expected to be dropped. He did not consider that fair treatment of him by Alemite.

The H-15 Alemite compressor was introduced in evidence as Defendant's Exhibit No. 2; and the instructions or pamphlets accompanying this compressor were introduced in evidence as Defendant's Exhibits 3 and 4 respectively; and the Alemite pin fitting or grease cup used in the demonstration by Mr. Jones was introduced in evidence as Defendant's Exhibit No. 5.

Mr. Louis Nucho, called on behalf of defendant, testified as follows: Name: Louis Nucho; age 28; residence Philadelphia, Pa.

A copy of the French publication Omnia, here in evidence as Exhibit No. 21, and also a paper purporting to be a translation of that French publication, here in evidence as Exhibit No. 22, were submitted to the witness, who stated, that he made this translation and believes this to be a true and correct translation of the French text of this publication.

A copy of the French patent No. 468,869 to Seng, here in evidence as Defendant's Exhibit 30; and also a paper purporting to be a translation of this French patent were submitted to the witness, who stated that he made this translation and to the best of his knowledge, it is a true and correct translation of the French text of that French patent.

His knowledge of the French language is fair. He speaks, reads and writes the French language fluently.

On the forenoon of October 14, 1927, he went to the Alemite Lubricator Co., located at North 16th Street, Philadelphia and purchased some Alemite fittings or grease cups, at Mr. Kalish's request, and ordered from a man behind the counter a complete set of fittings and the man picked them out from pigeon-holes or some other boxes in the back of the counter, so many of each kind, to fit an

Essex 1925 car. He paid for them and received a slip on which the purchase price is indicated, which slip was made in duplicate, the man keeping one copy and the witness, the other. He then asked the man something about springs he [fol. 269] had there, to have something to talk about while the change came back. Then the man asked the witness what kind of grease he used, and he said, "any old kind," and the man suggested that he use their grease and showed him a can, and he said he would try it later on, but had some right now. The witness purchased the Alemite fittings for a 1925 Essex car.

A photostatic print was submitted to the witness, who stated that it appears to be a photostatic reproduction of the receipt for the set of Alemite fittings or grease cups which he purchased.

The photostatic copy of the sales receipt of the Alemite Lubricator Co. for one set of Alemite pin fittings or grease cups for a 1925 Essex car, was introduced in evidence as "Defendant's Exhibit No. 59."

The hose and coupler, here in evidence as Defendant's Exhibits Nos. 7-B and 7-C respectively, were submitted to the witness, who stated he purchased this hose and coupler from the Alemite Lubricator Co., 16th & Fairmount Ave., Philadelphia, Pa.

He went there on January 4, 1928, took a pump with him, which is now connected to that coupler. The pump was full of grease and he gave it to the man back of the counter and asked him to put a hose on it, a hose and coupler. He took it back of a screen, into what looked like an office, and talked to a man there. He then came back and filled the order. The witness paid him $2.00.

The witness identified the receipt for that purchase. The receipt of the Alemite Lubricator Co. for the Alemite hose and coupler, Exhibits 7-B and 7-C respectively, was introduced in evidence as Defendant's Exhibit No. 60.

The witness purchased, also, so-called Zerk nipples or grease cups that morning, January 10, 1928, at the Alemite Lubricator Co., 16th St. & Fairmount Ave., Philadelphia.

(Witness produces the four grease cups so purchased.)

The four Zerk nipples or grease cups purchased from the Alemite Lubricator Co. were introduced in evidence as Defendant's Exhibit No. 61.

Q.21. You also have a sales receipt accompanying these purchases?

[fol. 270] (Witness produces sales receipt for these four Zerk grease cups.)

The sales receipt for the purchase of four Zerk nipples was introduced in evidence as Defendant's Exhibit No. 62.

No cross-examination.

Mr. Roderick W. Smith, called on behalf of defendant, upon direct examination, testified as follows:

His name is Roderick W. Smith; his residence is 28 Jefferson Ave., Haddonfield, N. J.; his age is 34. His occupation is District Sales Manager of the R. M. Hollingshead Co. He is thoroughly familiar with the products of the R. M. Hollingshead Co. He is familiar with their sales activities.

Q. 5. What is the general character of business of The R. M. Hollingshead Co.?

By Mr. Hansmann: I object to the question as immaterial to the point at issue.

A. The manufacture and sale of automobile chemical products. Some of the more important products of The R. M. Hollingshead Co. are: soap, grease, anti-freeze, patches, polish, and top dressing. The R. M. Hollingshead Co. has never engaged in the manufacture of mechinical equipment as to his knowledge. They have sold mechanical equipment in connection with their products, such as the Whiz high pressure chassis lubricator.

The witness identified the device here in evidence as Defendant's Exhibit No. 8 as the high pressure chassis lubricator of The R. M. Hollingshead Co. It is a machine used for lubricating the chassis of an automobile with grease.

The reason for the merchandising of such a piece of mechanical equipment is that the coming of the service station as a medium for greasing cars demanded such an

equipment. The automobile service station constitutes a very large part of the Hollingshead Company's market, or outlet for their goods. The item of grease or lubricant constitutes one of the most important products of the Hollingshead Co. from the standpoint of sales.

[fol. 271] Q. 15. Will you please just describe in a general way what the various lubricant products of your company are and how they are marketed?

By Mr. Hansmann: I object to this line of testimony on the ground that it is immaterial to the issue. With consent of defendant's counsel I make this a standing objection to all testimony relative to the extent of defendant's grease business.

A. Whiz gear grease, high pressure chassis lubricant, and Whiz penetrating oil. These products are marketed through garages, service stations primarily. Some business is done with the larger fleet truck owners direct.

Whiz gear grease is designed to lubricate the transmissions of automobiles. Whiz high-pressure chassis lubricator is designed to lubricate the spring and chassis bearings of automobiles.

Both of these greases must be applied by the ultimate user by means of some mechanical equipment. To fill a transmission case a small pump gun of some kind must be used. To lubricate the chassis of an automobile some kind of a so-called "pressure" gun must be used to force the grease through the necessary apertures or fittings on the car.

A picture was submitted to the witness, who stated that it represents and is a pictorial representation of the mechanical equipment used for dispensing the gear grease.

The unit consists of a pump and truck. The truck supports the container filled with grease as furnished by The R. M. Hollingshead Co. The pump screws into the top of the drum with a pipe that reaches to within a half inch of the bottom of the drum. Turning the handle on the pump sends grease from the drum, through the hose, to the nozzle on the end of the hose that is inserted in the opening of the transmission case.

The printed matter so identified was introduced in evidence as Defendant's Exhibit No. 63.

The various fittings found on automobiles and into which must be forced the chassis lubricant or grease are the Alemite, Zerk and Dot fittings. These three different types or makes of fittings or grease cups constitute a very great portion of the fittings found in the automotive field.

There is no other substantial outlet or use for the Hol- [fol. 272] lingshead Co.'s chassis lubricant or grease, other than to be placed or dispensed into these various makes of grease cups or fittings.

This Whiz high-pressure chassis lubricator was first adopted in the business of the R. M. Hollingshead Co. in the Fall of 1925. Prior to that time the sale of high pressure lubricant was very large in three and five pound cans, and was sold to the dealer who in turn would sell it to the ultimate user. Accompanying the delivery of an automobile there was, in the past, a small hand gun which could be used as a means of lubricating the car. The hand gun was loaded with grease from the three or five pound container. Prior to the advent of the Whiz high pressure lubricator our sales were larger through this medium.

There was a change in the grease market due to the fact that service stations became more numerous and expanded in their useful endeavor. They advertised to the ultimate used a greasing service attractive enough to cause many users to discontinue servicing their own cars with grease. A demand was created by the service station for a dispensing equipment that would make it easier for them to service cars with Whiz grease. The small hand gun apparently did not take care of the requirements of the service station which was servicing many cars a day.

Q. 26. Is this one of those small hand guns you speak of, or is it similar to those which you stated came with the car?

A. It is.

(Defendant's counsel submits to witness the Alemite Screw-type hand compressor, Exhibit 7).

Q. 27. Did the Hollingshead Co. at any time sell any grease cups or fittings, either of the Alemite or the Zerk type for use on automobiles or any other machinery?

A. Only the fitting found on the back end of a Dot connection, the purpose of which was to fasten the connection on to the hose of the high pressure chassis lubricator.

Q. 28. Did your company at any time, however, sell grease cups or fittings of any form whatsoever for the purpose of installation directly on bearings of the car?

A. They did not.

Q. 29. Or any other machinery?

[fol. 273] A. They did not.

Q. 30. Why not?

A. Because our business is the manufacture of automobile chemical products and not mechanical equipment.

The distribution of this high-pressure chassis lubricator was essential to the Hollingshead Co. in their sale of their products, that is, grease.

The witness identified a "Dot" connection for high pressure chassis lubricator, which was sold by the Hollingshead Co. in connection with their lubricator. The purpose of this "Dot" connector is to go on the so-called "Dot fitting" that is found on certain types of automobiles.

The device so identified as the Dot Adaptor or connector was introduced in evidence as Defendant's Exhibit No. 64.

The witness is aware that a Preliminary Injunction has been issued against The R. M. Hollingshead Co., enjoining the sale of their chassis lubricator dispensing equipment. The Hollingshead Co. is not now engaged in the sale or distribution of any chassis lubricating dispensing compressors or equipment since about March, 1927.

The Hollingshead Co.'s sales of chassis lubricant or grease have been affected by their discontinuance of chassis lubricating equipment or compressor; they have fallen off in volume because of their inability since March to furnish equipment required by the service station to service cars with their high pressure lubricant.

Q. 42. Do you have any competitors in the lubricating field so far as your chassis lubricant is concerned?

The Hollingshead Company's greatest competitor in this grease business is the Alemite Co. That is the same as the Bassick Co., although it is known in the trade as the Alemite Co. They sell a chassis lubricant to the same trade, that same general trade or field to which the Hollingshead Co. sells its chassis lubricant. The Alemite Company likewise competes with the Hollingshead Co. on their other grease, with the transmission lubricant.

A device, in evidence as Defendant's Exhibit No. 41, was submitted to the witness, who identified it as an end piece sold by The Hollingshead Co. as a part of the high-pressure chassis lubricator when its sale was first started. Only [fol. 274] a few of them were sold for a very short period. When Hollingshead discontinued this particular end piece or coupler a small hose or an end piece that had slots on either side was used, instead of the slotted key coupling now found at the extreme end.

The coupler last employed by the Hollingshead Co. is the type of Defendant's Coupler in evidence as Exhibit No. 8-C.

The witness identified defendant's Exhibit No. 6 as the "No. 20 high pressure hand gun," formerly marketed by the Hollingshead Co.

The gear grease dispensing truck, pump and hose (Exhibit No. 63) was merely bought and resold by the Hollingshead Co. None of the lubricant dispensing equipment, as for instance, the high pressure compressors which are here in evidence as Defendant's Exhibits 6 and 8, were actually made by the R. M. Hollingshead Co.

The witness then identified an invoice covering the purchase of the Dot lubricators by the R. M. Hollingshead Co. from the Dot Lubricator Co., which are in evidence here as Exhibit No. 64.

The invoice of the Dot Lubricator Co. was introduced in evidence as Defendant's Exhibit No. 65.

The witness identified an invoice for the purchase of 350 Dot adaptors by The R. M. Hollingshead Co. from the Dot Lubricator Company, likewise covering the same Dot adaptors or connectors before identified.

This last invoice was introduced in evidence as Defendant's Exhibit No. 66.

The witness identified invoices from the Alemite Lubricator Co. covering 500 and 100 Alemite straights (grease cups) sold to The R. M. Hollingshead Co. These invoices cover the same Alemite pin fittings which were made part of the Dot adaptor which is here in evidence as Defendant's Exhibit No. 64.

The last two invoices for Alemite pin fittings was introduced in evidence as Defendant's Exhibits 67-A and 67-B respectively.

The witness identified the device here in evidence as Defendant's Exhibit 45, as a Zerk nipple, to be used in connection with greasing automobiles having a Zerk system. It is used in connection with Whiz high-pressure lubricators.

[fol. 275] Upon cross-examination, Mr. Roderick W. Smith testified as follows:

He sold these lubricators. They were not sold independently of the grease. They were sold in connection with grease, each lubricator containing thirty pounds of grease, and was accompanied by a quarter drum of grease as part of the sale price. The sale price of this lubricator with its filling of grease and the accompanying drum of grease was higher than the sales price of a corresponding quantity of grease alone.

The hand compressors forming Defendant's Exhibit No. 6 were sold accompanying the sale of the quarter drum of the grease. The sale price of such a sale was not higher than the sale price of a quarter drum of grease alone; in fact, the hand compressor was given with a quarter drum of grease.

Upon redirect examination, Mr. Roderick W. Smith testified as follows:

A drum contains approximately 450 pounds of grease. A half-drum contains 300 pounds; and a quarter-drum, 160 pounds net.

The Alemite Company or the Bassick Company put up grease in generally similar sized containers. The Bassick Co. or the Alemite Co. likewise sell their high-pressure lubricating compressors along with their grease.

R. D. Q. 5. Would you consider it any handicap to the sale of your chassis lubricant if your automobile trade, service station trade, could no longer be supplied by you with any chassis lubricating dispensing equipment?

A. I would.

By Mr. Hansmann: Same objection.

R. D. Q. 6. Why?

By Mr. Hansmann: By consent of defendant's counsel, plaintiff's attorney makes the standing objection to redirect examination which does not follow along the lines of the cross-examination.

A. Because the service station today must have a dispensing unit capable of handling a large number of cars promptly. Our inability to furnish such a unit causes the service station to seek other markets for such a unit, and purchase grease from such markets, rather than from us. For example, it is exactly the same as buying a can of sardines with an opener. The trade will naturally go to the manufacturer who furnishes an opener with his sardines. [fol. 276] That is an illustration of our present position.

R. D. Q. 7. Are you aware that the Bassick Mfg. Co. or the Alemite Co., as you have called it, is also in the business of selling high-pressure service compressors to the garage and service station trade?

A. I am.

R. D. Q. 8. Why would it not fulfill all your needs to have the service station trade supplied with the chassis lubricant dispensing service compressors of the Bassick Mfg. Co.?

A. Because the sales representatives of the Alemite Co. bring pressure to bear upon the dealers that their chassis dispensing equipment will work most effectively.

No recross-examination.

Defendant gives notice of the taking of the testimony of the witness Harold Alfred Southgate at Audubon, N. J., forthwith.

Testimony of Harold A. Southgate

Mr. Harold A. Southgate, called on behalf of defendant, testified as follows:

His name is Harold Alfred Southgate; his age is 44; his address, 29 E. King's Highway, Audubon, N. J.; occupation, garage owner.

His experience in connection with mechanical arts, particularly lubrication, is for six years, in his garage. His previous training is: Assistant chief draftsman to the Grand Trunk Railway of Montreal, Canada. Chief army ordinance for the war department. Special sales repre-

sentative for the Emergency Fleet Corporation. Since that, garage owner.

He is familiar with lubrication of machinery, particularly lubrication of automobiles. He has specialized in the lubrication of automobiles six years. He never employed any help; always lubricated the automobiles himself. He is familiar with the various different forms or styles of lubricating apparatus used on automobiles, such as the Alemite, Zerk, Dot and the oil system. They are the three principal lubricating systems on the cars today.

He employs an "H-15" high compressor for the lubrication of the Alemite fittings. The Alemite twist gun. The Alemite have two or three different systems of a satisfactory nozzle; in the small hand guns, a nozzle that works with [fol. 277] a turn of the handle when you put the pressure on that. There is another one where you use a hose and the grease comes up.

First of all, in using the "H-15" you would turn the handle on the right hand side upwards until you got pressure. Then you would attach the coupling to the nipple on the car. Then you would press the handle down on the left hand side, thus forcing the grease through the shackle joint. If the grease goes through the shackle satisfactorily, the coupling is then unscrewed or uncoupled, and the nipple is ready for the next operation.

He is familiar with the construction of the "H-15" compressor including the coupler or nozzle of the same. He has to replenish the different parts from time to time. So far as the witness has been able to observe in his six years of lubrication experience, there is no suction or self-cleansing produced within the coupler or at the fitting when the coupler is detached from the fitting at the end of the act of lubrication. He finds the coupler on the compressor and the grease cup on the car generally not cleansed of grease, exteriorly after uncoupling. Normally there would be a slight trace of grease on the washer of the coupling; there would also be a small amount of grease on the ball of the nipple; and the nipple itself on the car will have a film of grease which collects.

The witness applied the H-15 compressor to two different Alemite fittings or grease cups on an automobile, and operated the compressor, forcing grease through the fittings and

bearings, and found that a small amount of grease was left at the south of the opening of the leather washer and grease appeared to have exuded out past the washer after uncoupling. There was a small amount of grease on the ball of the Alemite nipple, and a film of grease all around the outside of the nozzle. In practice, the witness would have to wipe every nipple before and after; wipe every nipple before he attached his gun to it, because that is one thing that wears the washers out. Most people object to having a lot of grease around the outside of the nipple and naturally he wipes it off so that it won't collect dust.

He does not believe that the construction of the "H-15" compressor which he used, or the construction of any part of it is especially conducive to a clean lubricating operation; that is, especially conducive to the removal of excess lubricant from the fitting or coupler, or both, when uncoupling.

[fol. 278] The witness' opinion that the operation of lubricating with this H-15 compressor is not a clean operation is borne out by his experience with the compressor. He has used other styles of Alemite compressors and these were no more conducive to the removal of excess lubricant from the fitting or coupler when uncoupling; they are all about the same, in his opinion.

He does not believe that any of the various Alemite compressors which he used are capable of any cleansing or particular suction at the coupler when uncoupling.

He has no interest in the outcome of this suit in which he is testifying.

Upon cross-examination, Mr. Harold A. Southgate testified as follows:

The test made with the H-15 compressor was had with a new coupling on the compressor. A coupling with a new washer would have done a cleaner job.

X Q. 3. Mr. Southgate, you did not relieve the pressure in the compressor before you uncoupled the coupler from the fitting, did you?

A. You mean by lifting up the handle?

X Q. 4. Yes, either lifting up the handle or releasing the petcock?

A. I usually lift up the handle, but I can't swear that I did it this time.

The witness had no trouble with the Alemite Lubricator Co. of Philadelphia. He did have some misunderstanding with them concerning the payment of a bill. He does not now buy Alemite lubricants from them since this misunderstanding. He does buy pin fittings from them, but not grease.

Upon redirect examination, Mr. Harold A. Southgate testified as follows:

In the normal operation of the H-15 compressor it is better to lift the lever up, especially when you have hit a hard shackle with a certain amount of pressure in the gun. If you do lift the handle, that will not eliminate the forcing out of the quantity of grease from the coupler after you uncouple. The witness can hardly explain that, unless there is some pressure still remaining in the hose. That pressure should be relieved when you lift up the hand lever which works the piston but in practice, it does not, because the grease would force out.

[fol. 279] Notary's Certificate

State of New Jersey,
County of Camden, ss:

I, Myrtle M. Pollitt, a Notary Public in and for the County of Camden, and State of New Jersey, do hereby certify that on the 10th day of January, 1928, as shown by the foregoing deposition, and pursuant to the attached notice and proof of service thereof, I was attended by Leonard L. Kalish of counsel for Defendant, and Elwood Hansmann of counsel for Plaintiff, and Harold A. Southgate, witness for Defendant, and that said witness who was of sound mind and lawful age, having been by me first duly sworn to testify to the truth, the whole truth, and nothing but the truth, gave his testimony, which was taken by the stenographer appointed by me and under my supervision, in the presence of the witness, and thereafter transcribed upon the typewriter also under my supervision; and said deposition was then read by the witness and subscribed by him.

I do further certify that I am not attorney or of counsel, nor related to any of the parties to his cause, nor in any way interested in the event of the cause named herein.

In testimony whereof, I have hereunto set my hand and seal this 19th day of January, 1928.

(Sgd.) Myrtle M. Pollitt, Notary Public for New Jersey. (Seal.) My commission expires May 19, 1929.

Testimony of Clifford L. Jones

CLIFFORD L. JONES recalled on behalf of defendant, testified as follows:

The witness identified a book as the advertising portfolio that Alemite salesmen had in the latter part of 1925 and early part of 1926, showing the different ads of the Bassick Mfg. Co. appearing in the Saturday Evening Post, copies of which appear in the booklet. It was published by the Bassick Mfg. Co.

By Mr. Hansmann: I object to the testimony as immaterial. The Alemite portfolio of advertisements was introduced in evidence as Defendant's Exhibit No. 68.

[fol. 280] The witness identified a photostatic print as a copy of the ad appearing in the Saturday Evening Post on August 20, 1927, advertising an Alemite Lubricant and a new Alemite 100% service sign.

The last photostatic print was introduced in evidence as Defendant's Exhibit No. 69, with the qualification that Defendant also makes profert of the original of which this is a photographic reproduction.

The witness identified a photostatic copy of the "Alemite Transmission Lubricant" booklet, dealing with Alemite lubricants, as to why you should use them; why they prove better, together with the lubricant agreement; copy of which was given to prospective purchasers.

This is a copy of the publication of the Bassick Mfg. Co.

A. So far as I know, yes.

By Mr. Kalish: I offer in evidence this last book entitled "Alemite Transmission Lubricant" as Defendant's Exhibit No. 70.

By Mr. Kalish: The submission of all photographic reproductions of publications is made subject to Defendant's

profert of the originals of which the instant exhibits are photostatic copies.

The witness identified a photostatic copy of the book given to the salesmen, entitled "Why There's a Few Cents Difference in Lubricants," dealing with the manufacture of cheap and better grades of lubricant, comparisons of lubricants, tests, and so forth. It is a copy of the publication of the Bassick Mfg. Co.

The last photostatic copy of book was introduced in evidence as Defendant's Exhibit No. 71.

The witness identified a photostatically reproduced book as being a true copy of the book entitled "Industrial Opportunities," dealing with opportunities in the industrial field, why they should tie up with Alemite and so forth, which the regular lubricant salesman (Alemite) had before the industrial department was organized here in Philadelphia by the present Alemite Lubricator Co. of Eastern Penna. It is a copy of the publication of the Bassick Mfg. Co.

[fol. 281] The last photostatically reproduced book entitled "Industrial Opportunities" was introduced in evidence as Defendant's Exhibit No. 72.

The witness identified another photostatically reproduced book as a copy of the "Alemite High Pressure," a booklet issued by the Bassick Mfg. Co. in the interests of service stations and Alemite dealers. Sent to them monthly, giving the various experiences of different service stations throughout the territory, together with advertisements of products.

The booklet entitled "Alemite High Pressure," was introduced in evidence as Defendant's Exhibit No. 73.

The witness identified another book called "Alemiteing—A Profitable Business." It was given to the salesmen for distribution where they saw fit, and dealt with the story of good, bad and indifferent lubricants compared with the Alemite, and why you should use it. It is a publication of the Bassick Co.

The book so identified was introduced in evidence as Defendant's Exhibit No. 74.

The witness identified another photostatic reproduction of two pages of a publication as a true copy of the pamphlet that is wrapped around the small hand operated guns that are dispensed in tool boxes and on sale all over the country. This pamphlet deals with the care of the gun and the hose, and gives a layman a little knowledge of how to use the gun. In other words, it is an instruction pamphlet.

The photostatic reproduction of the publication was introduced in evidence as defendant's Exhibit No. 75.

The witness stated that he is familiar with both the Alemite, as well as the Zerk type of lubricating equipment. As far as the witness knows, the Zerk type of lubricating equipment was marketed first by the Allyne Zerk Co. from Cleveland.

When the Zerk lubricating equipment was marketed by the Allyne Zerk Company it was sold in competition with the Alemite Lubricating Equipment. As a lubricating device, it is a device for lubricating the chassis of an auto- [fol. 282] mobile and naturally was sold in competition with the Alemite.

Q. 17. I now quote from page 3 of "Industrial Opportunities" here in evidence as Exhibit No. 72, as follows: "A competing lubricating system is now strong in New England—they must not become a factor elsewhere." Do you have any knowledge as to what lubricating system is referred to in this statement?

A. In my opinion the statement refers to the Dot Lubricator made by the Carr Fastener Co.

Q. 18. Where were they located?

A. They were located in New England, Cambridge, Mass., I believe.

Q. 19. Are you familiar with the Dot lubricator equipment?

A. I have come in contact with it.

Q. 20. When did you come in contact with it?

A. Previous to the time it was purchased by the Bassick Co., approximately, well, from the time I first entered the Alemite service until around the middle of 1926, so far as my memory serves me.

Q. 21. Well, you state that from the time you entered the Alemite service until about the middle of 1926 you met this Dot lubricator equipment in competition. Do you

mean that this Dot lubricator equipment competed with the Alemite and the Zerk lubricating equipment?

A. Yes.

Q. 22. What happened about the middle of 1926 that eliminated this competition of the Dot Lubricator equipment?

A. The Bassick Mfg. Co. purchased the Dot, insofar as it applied to the automotive field, and put them off the market, in other words.

Q. 23. Mr. Jones, was the Dot Lubricating Equipment ever, so far as you know, installed as standard equipment on any automobiles or trucks?

A. Yes, it was installed as standard equipment.

Q. 24. Could you enumerate any automobiles or trucks upon which the Dot lubricating system was standard equipment?

A. It was standard equipment for approximately a year on the Oldsmobile. It was standard equipment on the Pontiac when it first came out. It was standard equipment on another car of which I can't think at the present minute. [fol. 283] Oh, yes, it was standard equipment on the Oakland for a year at the same time as the Oldsmobile.

Q. 25. Was it the standard equipment on any trucks, commercial trucks, so far as you know?

A. I don't recall any.

Q. 26. So far as you know, is the Dot lubrication system standard equipment on any automobiles or trucks as they are being put out at present?

A. No.

Q. 27. I now hand you a photostatic reproduction of a notice, a paper, and ask you if you are familiar with it, what it purports to be, and whether it is a true copy of what it purports to be?

A. This is a card that was used by the Dot lubricating division of the Carr Fastener Co. at the time subsequent to the purchase of the Dot equipment. It was used in the automotive field by the Carr Fastener, and was sent to different dealers after that purchase, announcing the fact that they had withdrawn from the automotive field. I saw a copy of such a card in dealers' places of business.

By Mr. Kalish: I offer in evidence this last paper as Defendant's Exhibit No. 76.

Q. 28. Mr. Jones, in your work with the Alemite Lubricator Co., what were the various products which you sold, what were the various Alemite products which you sold?

A. Do you want me to enumerate them?

Q. 29. In classes.

A. They were the lubricating devices, the air guns, the hand guns, the lubricants, the gascolators, the pin fittings, both Alemite and Zerk. Of course that covers the pumps which comes under the heading of lubricants. Then the hose, the hose couplings, fittings, all come under one head.

Q. 30. Mr. Jones, was the sale of the lubricants any material part of your total sales or activities?

A. Oh yes, the sale of lubricants was your bread and butter. That is what the salesmen looked upon it as, because the lubricant was repeat business. The sale of the gun was a one-time affair. The lubricant being a consumable item was naturally repeat stuff and we went after that business, insofar as I personally was concerned.

By Mr. Hansmann: I object to the question as immaterial.

[fol. 284] Q. 31. Mr. Jones, on the last page of the book of the "Alemite High Pressure" of June 19, 1927, there appears a sign reading: "We use Genuine Alemite Lubricant—Alemite-ing costs No More Than Ordinary Greasing." Will you state briefly what that sign was and what its connection was with either the Alemite lubricating equipment or the Alemite lubricant?

A. That sign was a new 100% service sign and was given to dealers who only used Alemite lubricants. It was intended to distinguish that service station from the ordinary greasing station.

Q. 32. Was it used primarily to distinguish the service stations that used genuine Alemite lubricating equipment and those that used other lubricating equipment?

A. The sign was only given to the service station that used only the Alemite lubricating equipment. If they did not use all Alemite lubricant in equipment, they would not get the sign.

Q 33. What sort of a sign was this?

A. It was a 3 x 8 sign made of metal, bordered with wood, yellow background with blue letters.

Q. 34. On the copy of the advertisement which is here in evidence as Exhibit 69 there also appears a picture of a similar sign. The only difference apparently is that the

word "lubricant" in this last sign, which appeared apparently in August 1927, the word "lubricant" has been pluralized. What is the significance, if any, of that change? So far as you know?

A. I can only state from the point as made in Philadelphia, and that was when the sign first came out we gave it with chassis lubricant. Later on it was pluralized, and we were told it was pluralized for the purpose of only giving it to those who used both lubricants, chassis and gear lubricants.

Q. 35. Is the gear lubricant dispensed through or applied by the Alemite lubricating system?

A. Do you mean when you say "lubricating system" the guns like this H-15?

Q. 36. I mean just those which connect on to the Alemite fittings or the Zerk nipple.

A. The Bassick Mfg. Co., the salesmen, and everyone else did not intend that the gear grease should be dispensed by that means at all. They have other means for dispensing it.

[fol. 285] Q. 37. How is the gear grease dispensed?

A. The gear grease is dispensed by means of a vacuum pump which is attached to the drum and the pump, one turn pumping so many pounds or so much of a pound at the complete turn of the handle. It is a vacuum pump known as the Marvel equipment, or Marvel pump equivalent.

Q. 38. This gear grease dispensing pump, therefore, apparently had no connection with the Alemite or Zerk fittings or nipples. Am I correct in that?

A. You could not put lubricant of any kind into an Alemite or Zerk fitting by means of the gear lubricant pump or the Marvel pump.

Q. 39. Why?

A. Well, in the first place you could not put the nozzle of the pump on the fitting. The pump is so constructed that there is a closing device at the end to open when you want to pump out lubricant to the gear cases and close it when you have finished, and that prohibits the placing of that nozzle on the pin fittings.

Direct examination closed, no cross-examination.

Notary's Certificate

STATE OF PENNSYLVANIA,
County of Philadelphia, ss:

I, Nettie Bussinger, a Notary Public in and for the Commonwealth of Pennsylvania, acting as Special Examiner, do hereby certify that on the 4th, 5th, 6th, 7th, 9th, 10th, and 11th days of January, 1928, as shown by the foregoing depositions and pursuant to the attached notice and proof of service thereof, and also pursuant to the notice on the record, I was attended by E. Hayward Fairbanks and Leonard L. Kalish of counsel for Defendant and Elwood Hansmann of counsel for Plaintiff; and Hugo C. Gibson, Clifford L. Jones, Louis Nucho and Roderick W. Smith, witnesses on behalf of Defendant, at 1232 Chestnut Street, Philadelphia, Pennsylvania, and that said witnesses, who were of sound mind and lawful age, having been by me first duly sworn to testify to the truth, the whole truth and nothing but the truth, gave their respective testimony, which was taken down in shorthand by stenographers appointed by me and under my supervision, in the presence of the respective witnesses, and thereafter transcribed upon [fol. 286] the typewriter also under my supervision, and the said depositions were then read over by the respective witnesses and subscribed by them; and that the several exhibits offered in evidence were marked for identification as appears in the deposition.

I do further certify that I am not attorney or of counsel, nor related to any of the parties to this cause, nor in any way interested in the event of the cause named herein.

In testimony whereof I have hereunto set my hand and seal this 25th day of January 1928.

Nettie Bussinger, Notary Public. My commission expires March 2, 1929.

[fol. 287] IN UNITED STATES DISTRICT COURT, WESTERN DISTRICT OF TENNESSEE

Equity No. 935

THE BASSICK MANUFACTURING COMPANY, Plaintiff,

vs.

THE R. M. HOLLINGSHEAD COMPANY, Defendant

NARRATIVE OF THE TESTIMONY TAKEN BEFORE HIS HONOR, JUDGE HARRY B. ANDERSON, PRESIDING AT THE TRIAL ON APRIL 26TH, 27TH AND 28TH, AND THEREAFTER CONTINUED ON MAY 24TH AND 25TH, 1928, IN THE CASE OF THE BASSICK MANUFACTURING COMPANY, PLAINTIFF, VS. THE R. M. HOLLINGSHEAD COMPANY, DEFENDANT, EQUITY NO. 935, A CAUSE PENDING IN THE UNITED STATES DISTRICT COURT FOR THE WESTERN DISTRICT OF TENNESSEE, WESTERN DIVISION

Offered in behalf of the defendant a certified copy of certain papers in the case of The Bassick Manufacturing Company, plaintiff, vs. The Frank Miller Company, a cause pending in the United States District Court for the District of New Jersey.

Offered in behalf of the plaintiff a certified copy of the notice of the motion to dismiss in the case of The Bassick Manufacturing Company vs. The Frank Miller Company, the affidavits of J. E. Otis, Jr. and Elwood Hansmann in support of said motion, a certified copy of the certificate of incorporation of The Frank Miller Company and a certified copy of the order of dismissal by Judge Bodine, marked "Plaintiff's Exhibit No. 1."

ALBIN C. AHLBERG, Plaintiff's Witness:

I am a lawyer, thirty-one years of age, reside at Chicago, Illinois, and am connected with the firm of Williams, Bradbury, McCaleb & Hinkle, who represent The Bassick Manufacturing Company, the plaintiff. In behalf of The [fol. 288] Bassick Manufacturing Company on February 28, 1928, I attended the United States District Court for the District of New Jersey before Judge Bodine and presented a motion to dismiss the suit of The Bassick Manufacturing

Company vs. The Frank Miller Company, Equity No. 2759. I became familiar with the papers filed in conjunction with the motion and can identify and submit the affidavits filed by the defendant, The Frank Miller Company, in opposition to the motion to dismiss.

Papers offered in evidence as Plaintiff's Exhibit 2.

In the Frank Miller case there was a hearing upon plaintiff's motion for a preliminary injunction on November 29, 1927, at which time there was a suggestion by the court that the hearing proceed to a final hearing. Following the argument of the preliminary injunction motion on November 29, 1927, there was filed by plaintiff voluminous affidavits and by defendant numerous exhibits. I would say that the case was not submitted upon the merits on validity and infringement to Judge Bodine. There was correspondence and an agreement was reached between counsel in the latter part of February, 1928, that briefs be filed in the Frank Miller case on March 5, 1928, but they were never filed.

Cross-examination:

The proofs upon the merits had been filed but not completed when the motion to dismiss was presented to Judge Bodine on February 28, 1928. I say that the proofs were not completed, for the reason that Mr. Kalish, counsel for the defendant, had served notice upon plaintiff's counsel that defendant was to ask leave of court on February 28 to file a lot of additional exhibits that had not theretofore been introduced in evidence. The plaintiff had introduced its proofs and the only thing incomplete so far as I know was the matter of some exhibits which the defendant wanted to file. When the preliminary injunction motion was heard in November, there was an argument, and there were before the court very voluminous affidavits and counter-affidavits filed by both parties. Both parties agreed that the case should be treated as of final hearing.

I made the motion to dismiss the bill without prejudice before Judge Bodine. It was a written motion supported by the affidavits filed. I was one of counsel for The Bassick Manufacturing Company in the New Jersey litigation, [fol. 289] and was familiar with the pleadings and proof in the case. Opposing counsel were present at the motion to dismiss without prejudice before Judge Bodine, and there

was an argument whether plaintiff had a right to dismiss its suit without prejudice. The court stated that he was not deciding the merits of the case, but that the plaintiff had a right to dismiss its bill. I had drawn an order wherein the words "without prejudice" appeared. The court said he would grant the order omitting the words "without prejudice." Whereupon I suggested that omitting the words "without prejudice" would only preclude the plaintiff's right to recover profits and damages up to that date, and to that the court agreed. The court struck out the words "without prejudice" in the order and signed it.

What I wanted was the order or decree to recite that the dismissal was without prejudice, but under the direction or action of the court I struck out the words "without prejudice."

I made no exception to the action of the court in striking out the words "without prejudice" or directing them to be stricken, and no appeal has been taken to the Circuit Court of Appeals for the Third Circuit to determine the correctness of Judge Bodine's action in striking out the words "without prejudice".

The court made a statement that it was his impression that the patent could not be sustained as against The Frank Miller Company devices, but it was not my impression at all that if we had gone on with our case and we had filed briefs that he would have dismissed our bill.

"Q. You were then there and you thought he would sustain your bill?

A. I took the liberty——

Mr. Williams: If the Court please, I don't see that this is germane, and what counsel's impression of what the Court might do after he had heard the case, it seems to me, is rather incompetent.

The Court: Well, the impression of counsel on either side of what the court would have done is immaterial. All we consider is what the court did do. Here's some kind of a suit filed in New Jersy. What it was, I haven't found out yet, but there was evidently a suit for infringement of a patent and application for a preliminary injunction, which I gather was treated also as a final hearing, the withdrawal of the suit by the plaintiff, and the words 'without prejudice' stricken out.

[fol. 290] Mr. Williams: No question about that.

Mr. Burch: That is what the record shows.

Mr. Williams: Now, the question is what the counsel's impression was of what the Court would have done on the merits if proofs had been submitted?

The Court: I don't think the opinion of counsel of what the Court would do would be of any value.

Mr. Burch: I will not pursue that, your Honor, because on my theory all this parole evidence is inadmissible.

The Court: Mr. Williams stated that record was not complete and this evidence was introduced more in the nature of supplementing the record.

Mr. Burch: The record contains everything that we conceive is necessary to present to your Honor, that is, the bill, the answer, the motions and affidavits in support of the motion and the decree. Your Honor is not concerned with the evidence in the New Jersey case at all, and the authorities are these are the papers, the ones to which I have just referred, to which a Court looks on the presentation of the defense of res judicata.

The Court: There are just two things for me to look at on this motion, as I conceived it. If I am wrong, I hope counsel will correct me. First, w*hat* this the same subject-matter? Secondly, what is the effect of this decree of dismissal?

Mr. Burch: I think that is the question.

The Court: Without containing the words "without prejudice," that being stricken out, I take it would be exactly the same as though the order had been originally drawn dismissing the suit without prejudice—whether that is a decree on its merits.

Mr. Burch: We are prepared to argue that."

Redirect examination:

The court said at the hearing upon the motion to dismiss that he was not at that time deciding the case, and he told the court reporter who was present in chambers at this rather informal discussion not to make any transcript of what was said there, either by the court or otherwise. There were no opinions filed or reported by Judge Bodine on the merits of the case.

[fol. 291] Testimony of O. A. CUMMINGS stipulated.

At the suggestion of counsel for the defendant, it was stipulated that the affidavit of O. A. Cummings, dated September 13, 1926, and the exhibits identified therein, may be taken as in evidence to have the same force and effect as though introduced by the testimony of the witness.

It was similiarly stipulated that the affidavit of D. A. Beezley and the exhibits submitted in connection therewith, filed in support of plaintiff's motion for a preliminary injunction, be used in lieu of the testimony of Mr. Beezley; to have the same identification marks in both the Cummings and Beezley transactions as they had in connection with the affidavits.

It is stipulated that The Bassick Manufacturing Company, the plaintiff, is a corporation of the State of Delaware, the date of incorporation being March 31, 1920.

Offered in evidence in behalf of the plaintiff, Gullborg patent in suit No. 1,307,734 as Plaintiff's Exhibit 3.

Offered in evidence in behalf of the plaintiff a certified copy of the disclaimer of claim 12 of Gullborg patent No. 1,307,734 as plaintiff's Exhibit 4.

Offered in evidence in behalf of the plaintiff a certified copy of Zerk patent in suit No. 1,475,980, as Plaintiff's Exhibit 5.

It is stipulated that the plaintiff, The Bassick Manufacturing Company is vested with the whole right, title and interest in and to the Gullborg and Zerk patents in suit, numbered respectively 1,307,734 and 1,475,980.

Offered in evidence in behalf of the plaintiff as Exhibits Nos. 6 and 7, respectively, the defendant's main and reply briefs before the Master.

Offered in evidence as Plaintiff's Exhibit 8 a stipulated statement of fact by J. E. Otis, Jr., vice president and general manager of The Bassick Manufacturing Company.

Offered in evidence as part of the stipulated testimony of Mr. Otis the following exhibits:

Exhibit "A"—Alemite lubricant compressor,
Exhibit "B"—Assortment of Alemite pin fittings,
Exhibit "C"—Plaintiff's Alemite Manual,

Exhibit "D"—Plaintiff's publication, "How to Get More Alemite Business",

[fol. 292]

Exhibit "E"—Plaintiff's Alemite and Alemite-Zerk price list,

Exhibit "F"—Plaintiff's publication "Alemite Products",

Exhibit "G"—Copies of title papers to Gullborg and Zerk patents,

Exhibit "H"—Volume III of Adjudication Book,

Exhibit "I"—Drawing of Alemite and various infringing constructions,

Exhibit "I"—Drawing of O. K. rubber gasket and screw type and rubber gasket couplers,

Exhibit "J"—Petition for rehearing Larkin and O. K. cases,

Exhibit "K"—Supplemental petition for rehearing Larkin and O. K. cases,

Exhibit "L"—Petition to Supreme Court for certiorari in Larkin and O. K. cases,

Exhibit "M"—Drawing of Larkin compressor, coupler and pin fitting involved in Larkin-Chicago case,

Exhibit "N"—Copy of Larkin 1926 catalog constituting Exhibit 154 in Larkin-Chicago case,

Exhibit "O-1"—Larkin 1927 catalog referred to in May 27, 1927 order for preliminary injunction,

Exhibit "O-2"—Larkin Miniature catalog,

Exhibit "O-3"—Drawing of Larkin coupler,

Exhibit "O-4"—Drawing of Larkin coupler,

Exhibit "O-5"—Lubricant compressor and coupler like Exhibit "G" Sawitoski affidavit referred to in order of May 27, 1927, in Larkin-Chicago case,

Exhibit "O-6"—Drawing of Larkin coupler submitted by Sawitoski and referred to in order of May 27, 1927.

Exhibit "P"—Larkin 1927 catalog referred to in preliminary injunction order of December 5, 1927 in Larkin-Chicago case,

Exhibit "P-1"—Larkin lubricant compressor and coupler of so-called small diameter type,

Exhibit "Q"—Drawing of lubricant compressor of type involved in Motor Parts Station case,

[fol. 293]

Exhibit "AA"—Photograph of White Company grease ejector,

Exhibit "BB"—Drawing of White Company grease ejector and shackle bolt.

Offered in evidence on behalf of the plaintiff the following exhibits:

Exhibit 9—Assortment of Alemite-Zerk fittings,
Exhibit 10—Alemite-Zerk compressor,
Exhibit 11—Alemite Handy-Shop compressor,
Exhibit 12—Alemite H-15 Service Compressor,
Exhibit 13—Alemite P-25 Service Compressor,
Exhibit 14—Alemite-Zerk adapters for Alemite Handy-Shop compressor, Alemite H-15 Compressor and Alemite P-25 compressor,
Exhibit 15—Exhibit J Drawing Davis affidavit,
Exhibit 16—Exhibit K drawing Davis affidavit.

Defendant's Evidence

L. B. SHIPP, Defendant's Witness.

My age is 31. I reside at 414 North Claybrook, Memphis, Tennessee. I am local manager for The R. M. Hollingshead Company, engaged in the manufacture and sale of automobile and chemical accessories. The main products are automobile transmission and differential grease, chassis lubricant, top dressing, penetrating oil, insecticides and things of that nature. Territory I cover in the sale of the Hollingshead Company's products comprises all of Arkansas, a large part of Tennessee, as far east as Nashville, over half of Mississippi, parts of Kentucky, Missouri and Alabama. The twenty men covering this territory come in contact almost exclusively with the automobile trade. I personally have first hand knowledge of the automobile trade. Prior to March, 1927, we sold chassis lubricant dispensing compressors. They are the compressor outfits I have seen in evidence here.

I have no official knowledge as to why my company sold a piece of mechanical equipment such as a grease dispensing compressor, but from the experience I gained in the sale of greases to automobile dealers, I should say that the

sustaining volume on which we operate our business comes from the sale of heavy lubricants. We have likewise found it necessary in the sale of our greases to have at least a satisfactory means of dispensing what we sold, as is the [fol. 294] case with our transmission and rear axle lubricant; and we have always had a Marvel Vacuum Pump, a very simple contrivance for taking the grease from the container and putting it into the rear axle and the transmission. Touching the practical side of the good the equipment did, it gave us the opportunity of talking 100% equipment to our dealers when we made the sale of our grease. We found it very hard to sell our chassis lubricant without having means to furnish the dealer with it to apply it to the car.

During the time we were selling this equipment, prior to March of last year, our grease sales were considerably heavier than they have been since that time. I should say that a sales organization such as ours, that is competing with another organization of equal power and intelligence, assuming that the breaks are the same, the man having the equipment with which to dispense it has an overwhelming advantage. And, of course, I feel very keenly the loss of some kinds of equipment with which to vend the grease we offer for sale.

Defendant's Exhibit 63 illustrates the grease dispensing pump or equipment we sell. It is sold at no profit. I would say that the chassis lubricant sales have fallen off at least 50% since March, 1927 when we discontinued our chassis lubricating equipment, and that the sales of gear grease have fallen off since the same time at least 33⅓%.

"Q. Mr. Shipp, I will now hand you a device marked as Defendants Exhibit No. 20, and ask you to examine it and state—this device being marked Defendant's Exhibit No. 20, Alley's Lubricating Pump. Will you please examine this and state whether in your opinion, that pump might be used in a satisfactory manner for the lubricant of bearings equipped with these so called pin fittings?

A. It looks all right to me; I would like to have it.

Q. If you had no other chassis lubricating dispensing equipment but that, would you utilize it at all?

A. I think so.

Mr. Williams: I think that is rather incompetent and speculative idea.

The Court: Yes, I will admit it.

Q. Mr. Shipp, in the sale of your chassis lubricants, does it make any particular difference to you whether — sold [fol. 295] this pump or any other pump for dispensing your grease?

Mr. Williams: I object to that as irrelevant, immaterial and incompetent. The fact is, they sold the thing we complained of, and speculation as to whether it would make a difference whether he sold that or something else, it seems to me, is pretty remote from any issue here.

Mr. Kalish: All this goes, not to the question of infringement, not to the validity of patents, but to the scope of the monopoly contended for, and the device herein exhibited is a reproduction of the prior art, and forms a substantial basis of the defendant's contention that the scope of the monopoly is not what the plaintiff contends for.

The Court: All right; go ahead and answer the question.

(Question read.)

The Court: It seems to me the answer on that is obvious. If he had any kind of a pump that distributed grease over the car, it wouldn't make any difference what kind of a pump he had.

A. I will answer it the same way.

The Court: All it means is a pump that would connect with the cars is why it is necessary to have a pump to sell the grease.

Mr. Kalish: That will be all."

Cross-examination:

When I say it wouldn't matter in our sale of chassis lubricant whether you had this so-called pump or that in referring to the Defendant's Exhibit No. 20 (Alley's devise) which you examined, it depends on what kind of fittings a car had whether I meant that so far as the compressor or pump and coupler were adapted to co-operate with the Alemite pin fittings of The Bassick Manufacturing Company, it would make no difference. I know a large number of cars are equipped with Alemite or Alemite-Zerk fittings of The Bassick Manufacturing Company. I know of one that doesn't have any high pressure fittings attached to it. I know of one car that had the Dot system, or did have it, but I do not know whether they do now or not.

The Oakland did, but I don't know whether it was in 1924, I don't know positively whether the Oakland car had Dot fittings since 1924.

[fol. 296] We wanted to be able to sell a gun that could be used with the fittings on the cars, and it didn't matter what pump it was, so long as it had a coupler that was adaptable for use with Alemite or Alemite-Zerk fittings. The sale of the Hollingshead compressor equipment shown in Defendant's Exhibit No. 63 does not involve the use of either Alemite or Alemite-Zerk or other high pressure fittings. The Hollingshead Company sold either with or without profit, or gave away devices like those shown in Defendant's Exhibit No. 63 since I have been with them four years, since the beginning of 1924. At the present time we are giving them away to help the sale of our gear grease. The Hollingshead Company either sold or gave away compressor outfits prior to my connection with the company, but I have no personal knowledge of it having been done before 1924.

When I speak of gear grease or differential grease, the sales of which have fallen off some 33⅓% since March 1927. I refer to greases which go into differential cases and transmission cases, and those greases go into cases through large holes which are not equipped with Alemite or Zerk or any high pressure fittings, so that the sales of greases in which neither Alemite nor Zerk are in any way involved have also fallen off 33⅓%, during the same period the sales of chassis grease have fallen off 50%, approximately. I would estimate the sales of both have fallen off 33⅓% and the gun 50. Well I have no figures at the office at all.

Redirect examination:

The reason for the dropping off of the sales of gear grease is that dealers prefer to buy one grease where they buy the other. They don't like to open two accounts for greases so nearly for the same purpose. There is no reason why our grease cannot be used with an Alemite gun. All grease manufacturers or grease selling companies either sell or give a compressor away. Most of them lend or give them away, which means the same thing.

Recross-examination:

Other dealers give no chassis lubricant dispensing equipment away that I know of. I know of no other manufac-

turers of grease who sell or give away dispensing equipment—what may be called a gun or compressor—for putting chassis lubricant into bearings, either through Alemite or Zerk fittings.

[fol. 297] Redirect examination:

Our sales organization in its contact with the trade has experienced difficulty in selling our grease as against the grease of The Bassick Manufacturing Company known as Alemite grease. Numerous cases come up every week where my salesmen lose a sale in a large measure because the Alemite people tell our customers if they use our grease in it they withdraw their guaranty on the sale of the gun. Mr. John T. Mahoney in Memphis has experienced trouble in that way.

Recross-examination:

The Hollingshead Company sold its soap and its grease and its top dressing and so on, in pound and five pound cans for many years. These things were sold mainly to automobile owners for use by themselves. I have known the time when automobiles were equipped with old fashioned grease cups it was the custom for the individual car owner to buy a one pound can of Hollingshead Company grease, and with his finger or knife blade fill his own grease cups. I know it has become more the custom now than it was in 1924 or before for people to have their cars greased at public service stations rather than at home in the back yard. There were other people that sold bulk lubricants that were used at filling stations and garages in a large measure, but that was not a large part of our business. Our business was mainly one pound tins to go in hardware and accessory stores, but we have always sold a large amount of gear grease and other things with it. The trend has been away from one or three pound cans and towards bulk grease, but we are not losing out on that account.

Plaintiff's Rebuttal Evidence

John M. McGregor, Plaintiff's Witness:

I live in Memphis. I am president and principal owner of the Alemite Lubricator Company of Memphis. It has no

connection with The Bassick Manufacturing Company. We buy our merchandise from that company and sell it. We take our own profits and stand our own losses and collect our own accounts.

I heard the testimony of Mr. Shipp, the local representative of The R. M. Hollingshead Company. I have been [fol. 298] the distributor of Alemite products in Memphis since the business first started in Memphis. My territory covers part of five different states—Tennessee and nearby states. Other than Alemite or Alemite-Zerk compressors of The Bassick Manufacturing Company, there are sold under the licenses of The Bassick Manufacturing Company for use in lubrication of automobiles or other machinery equipped with Alemite and Alemite-Zerk fittings, the compressor outfits of United States Air Compressor Company of Cleveland, Ohio, and the Ball Crank Company, of Cincinnati, Ohio. Their devices are equipped with couplers for Alemite or Zerk fittings, and they are available for anyone to buy and use in this territory and elsewhere throughout the United States.

We sell the compressors of The Bassick Manufacturing Company to manufacturers or merchants of grease. We sell all the major oil companies. One year I sold the Standard Oil Company of Louisiana more than $20,000.00 worth of these guns. We sell the Gulf Refining Company, the Indian Refining Company and the Pan American, in fact every large oil company here. We have never to my knowledge sold them any grease. These concerns themselves manufacture and sell grease. The compressor outfits of The Bassick Manufacturing Company and its licensee, the United States Air Compressor Company and the Ball Crank Company, are all available to be bought by any manufacturer of grease, such as I have named, and The R. M. Hollingshead Company.

Cross-examination:

The grease manufacturers and oil companies referred to use them at all of their service stations, and they use them in their own establishments to lubricate their own equipment. They use these compressors in service stations owned by them. I know that the oil companies bought compressors from us to be resold by them to the purchasers of

their grease, to the bulk purchasers of their grease outside of their own service stations. We have sold Standard Oil Company for that purpose, and I think nearly all of the companies. I know of a suit at one time pending between The Bassick Manufacturing Company and the Cincinnati Ball Crank Company, but I do not know the subject-matter of that suit.

Offered in evidence as Plaintiff's Exhibit 17 suction demonstration apparatus comprising several parts marked seriatim A, B, C, D, E, and F.

[fol. 299] Offered in evidence as Plaintiff's Exhibit 18 the original exhibits in the suit of The Bassick Manufacturing Company vs. The O. K. Manufacturing Company, one of the cases decided in 1927 by the Court of Appeals for the Sixth Circuit.

ALBIN C. AHLBERG, Plaintiff's Witness:

I have been sworn. The exhibits offered as Plaintiff's Exhibit 18 are the original exhibits in the suit of The Bassick Manufacturing Company vs. The O. K. Manufacturing Company, et al., the Sixth Circuit case referred to.

The claims relied upon are claims 1, 2, 3, 4, 5, 6, 8, 10, 14 and 15 of Gullborg patent in suit No. 1,307,734 and claims 2, 3 and 5 of Zerk patent in suit No. 1,475,980.

Offered in evidence as Plaintiff's Exhibit No. 19 transcript of argument before Judge Bodine in the case of Bassick vs. The Frank Miller Company upon motion to supplement and explain order of dismissal.

The foregoing proceedings occurred on April 26, 27 and 28, 1928, whereupon an adjournment was taken until May 21, 1928.

Proceedings were resumed on May 24, 1928.

Offered in evidence as Plaintiff's Exhibit 20 Notice and Motion to supplement and explain order of dismissal in the case of Bassick vs. The Frank Miller Company, Memorandum of Judge Bodine and appeal papers in that case.

[fol. 300] PLAINTIFF'S EXHIBIT—Filed Apr. 26, 1928

UNITED STATES DISTRICT COURT, DISTRICT OF NEW JERSEY

Equity. No. 2759

THE BASSICK MANUFACTURING COMPANY, Plaintiff

vs.

THE FRANK MILLER CO., Defendant

MOTION

Now comes the plaintiff, by its solicitors and counsel, and moves that the above entitled cause be dismissed without prejudice, with costs to the defendant.

This motion is based upon the record and proceedings herein, upon the accompanying affidavits of Elwood Hansmann and J. E. Otis, Jr., and the exhibits submitted therewith.

French, Richards & Bradley, Williams, Bradbury, McCaleb & Hinkle, Solicitors and Counsel for Plaintiff.

Certified Copy

UNITED STATES OF AMERICA,
For the District of New Jersey, ss:

I, George T. Cranmer, Clerk of the United States District Court in and for the — District of New Jersey, do hereby certify that the annexed and foregoing is a true and full copy of the original Motion now remaining among the records of the said Court in my office.

In testimony whereof I have hereunto subscribed my name and affixed the seal of the aforesaid Court at Trenton this 13th day of April, A. D. 1928.

George T. Cranmer, by Charles S. Chvrier, Deputy Clerk. (Seal.)

[fol. 301] [Endorsed on back:] #Equity—2759. United States District Court for the District of New Jersey. The Bassick Manufacturing Company, Plaintiff, vs. The Frank Miller Co., Defendant. Certified Copy, Motion. Williams, Bradbury, McCaleb & Hinkle, 1315 Monadnock Block, Chicago. Filed Feb. 24, 1928 at 9 o'clock A. M. George T. Cranmer, Clerk. D.

[fol. 302] UNITED STATES DISTRICT COURT, DISTRICT OF NEW JERSEY

Equity. No. 2759

THE BASSICK MANUFACTURING COMPANY, Plaintiff,

vs.

THE FRANK MILLER CO., Defendant

AFFIDAVIT OF J. E. OTIS, JR.

STATE OF ILLINOIS,
County of Cook, ss:

J. E. Otis, Jr., being first duly sworn deposes and says:

I am a resident of Chicago, Illinois, and am a vice-president and the active chief executive officer of The Bassick Manufacturing Company, the plaintiff in the above entitled suit. I keep myself informed of the status of the various patent infringement suits brought by my company and am familiar with the record and proceedings herein.

I am aware that The Bassick Manufacturing Company has brought a suit in the United States District Court, for the Western District of Tennessee, Western Division, against The R. M. Hollingshead Company of Camden, New Jersey, but having a regular and established place of business at Memphis, Tennessee, for infringement of Gullborg patent 1,307,734 and Zerk patent 1,475,980 upon which the present case against The Frank Miller Co. is based. I am aware that in the Hollingshead suit a preliminary injunction order was entered on March 21, 1927, and modified on April 20, 1927, to the extent that claim 12 was struck out of the order for preliminary injunction, as set forth in the affidavit of Elwood Hansmann.

I am making this affidavit in support of plaintiff's motion to dismiss the suit against The Frank Miller Co. without prejudice and with costs to the defendant.

On Thursday, February 9, 1928, I received a visit from Mr. R. M. Bagley, vice-president of The R. M. Hollingshead Company, Camden, N. J., and during my interview with him we discussed the suit which The Bassick Manu-
[fol. 303] facturing Company brought against The R. M. Hollingshead Company. Mr. Bagley informed me that

The Frank Miller Co. of Camden, N. J., was and is a subsidiary of The R. M. Hollingshead Company, it having been purchased by the Hollingshead Company a few years ago for the purpose of selling the jobbing trade under a different brand the same products which the Hollingshead Company sells to the dealers direct. My interview on February 9 with Mr. Bagley was the first intimation that I had received that The R. M. Hollingshead Company owned or controlled The Frank Miller Company, which The Bassick Manufacturing Company had sued for patent infringement in a case involving substantially identically the same lubricating equipment as was enjoined by the United States District Court in the suit brought against The R. M. Hollingshead Company, as shown by the exhibits submitted with the affidavit of Elwood Hansmann, which I have read.

Subsequent information received by me confirms Mr. Bagley's statement that The R. M. Hollingshead Company owns and controls The Frank Miller Co., and that four of the five directors of The R. M. Hollingshead Company, viz., R. M. Hollingshead, R. M. Bagley, C. W. Tomlinson and R. M. Hollingshead, Jr., comprise four of the six directors of The Frank Miller Co.

A financial report just received by me from a commercial agency states that "The company is controlled by The R. M. Hollingshead Company and it occupies a portion of the building of The R. M. Hollingshead Company." The report also states that "It is reported the company has done a good trade, has a warehouse in San Francisco which is also occupied by The R. M. Hollingshead Company, who is said to take the output of the company," and also that F. J. Semple, president of The Frank Miller Co. was formerly vice president of The R. M. Hollingshead Company.

The attorneys for The Bassick Manufacturing Company have taken steps to procure certified copies of the articles of incorporation of The R. M. Hollingshead Company and The Frank Miller Co. and copies of the annual reports of these concerns showing these facts, and these certified copies will be submitted with this affidavit or filed in court when received from the Secretary of State of New Jersey.

J. E. Otis., Jr.

Subscribed and sworn to before me this 22nd day of February, 1928. Szada Goldberg, Notary Public. (Seal.)

[fol. 304] [Endorsed on back:] No. Equity 2759. In the District Court of the United States for the District of New Jersey. The Bassick Manufacturing Company, Plaintiff, vs. The Frank Miller Co. Affidavit of J. E. Otis, Jr. Williams, Bradbury, McCaleb & Hinkle, 1315 Monadnock Block, Chicago.

Frank Miller Co.

Certificate of Incorporation

We, the undersigned, in order to form a corporation for the purposes hereinafter stated, under and pursuant to the provisions of an Act of the Legislature of the State of New Jersey, entitled "An Act Concerning Corporations (Revision of 1896)," and the acts amendatory thereof and supplemental thereto, do hereby certify as follows:

Name.—I. The corporate name is Frank Miller Co.

Registered Office.—II. The registered office of the corporation is 304-306 Market Street, Camden, New Jersey, and the New Jersey Corporation Guarantee & Trust Company is designated as the statutory agent therein, in charge thereof, and upon whom process against the corporation may be served.

Principal Objects.—III. The objects for which the corporation is established are primarily:

To manufacture, buy, sell, import and export, and deal in all or any kinds of leather dressings, oils, soaps, blackings, polishes and other specialties, including automobile, mill, laundry, toilet and family soaps.

To manufacture, buy, sell, deal in and use alkalies and chemicals of all kinds and all articles and things used in the manufacture, maintenance and working thereof, and also all apparatus and implements and things for use either alone or in connection with products of which they are ingredients or in the manufacture of which they are a factor.

[fol. 305] Subsidiary Purposes and Powers.—As subsidiary to and in connection with the foregoing from time to time the corporation may:

Manufacture, purchase or otherwise acquire goods, wares, merchandise and personal property of every class and description, and hold, own, mortgage, sell or otherwise dispose of, trade, deal in and deal with the same.

Acquire and undertake the good-will, property, rights, franchises, contracts and assets of every manner and kind

and the liabilities of any person, firm, association or corporation, either wholly or in part, and pay for the same in cash, stock or bonds of the corporation, or otherwise.

Enter into, make, perform and carry out contracts of every kind and for any lawful purpose with any person, firm, association or corporation.

Issue bonds, debentures or obligations of the corporation, and at the option of the corporation to secure the same by mortgage, pledge, deed of trust or otherwise.

Acquire, hold, use, sell, assign, lease, grant licenses in respect of, mortgage, or otherwise dispose of letters patent of the United States or any foreign country, patents, patent rights, licenses and privileges, inventions, improvements and processes, trade-marks and trade names, relating to or useful in connection with any business of the corporation.

Hold, purchase or otherwise acquire, sell, assign, transfer, mortgage, pledge or otherwise dispose of shares of the capital stock and bonds, debentures or other evidences of indebtedness created by other corporation or corporations, and, while the holder thereof, exercise all the rights and privileges of ownership, including the right to vote thereon.

Purchase, hold and re-issue the shares of its capital stock, its bonds or other securities.

Remunerate any person or corporation for services rendered, or to be rendered, in placing or assisting to place or guaranteeing the placing or underwriting of any of the shares of stock of the corporation, or any debentures, bonds or other securities of the corporation, or in or about the formation or promotion of the corporation, or in the conduct of its business.

With a view to the working and development of the properties of the corporation, and to effectuate, directly or indirectly, its objects and purposes, or any of them, the corporation may, in the discretion of the directors, from time to time carry on any other lawful business, manu- [fol. 306] facturing or otherwise, to any extent and in any manner not unlawful.

The corporation may conduct business in the State of New Jersey, and elsewhere, including any of the states, territories, colonies or dependencies of the United States, the District of Columbia, and any and all foreign coun-

tries, have one or more offices therein, and therein to hold, purchase, mortgage, lease, let and convey real and personal property, except as and when forbidden by local laws.

The foregoing clauses shall be construed both as objects and powers, but no recitation, expression or declaration of specific or special powers or purposes herein enumerated shall be deemed to be exclusive; but it is hereby expressly declared that all other lawful powers not inconsistent therewith are hereby included.

Capital Authorized.—IV. The corporation is authorized to issue capital stock to the extent of Twenty-eight thousand (28,000) shares without nominal or par value.

Of said stock Two thousand (2,000) shares shall be known and designated as Preferred Stock; Twenty-five thousand (25,000) shares shall be known and designated as Class A Common Stock and One thousand (1,000) shares shall be known and designated as Class B Common Stock.

Said Preferred Stock may be issued as and when the board of directors shall determine and shall entitle the holder thereof to receive out of the net earnings, and the corporation shall be bound to pay, a fixed cumulative dividend in the amount of Seven Dollars ($7.) per annum, payable semi-annually on the fifteenth days of January and July in each year before any dividend shall be set apart or paid on Class A or Class B stocks.

Said Class A Stock may be issued as and when the board of directors shall determine and shall entitle the holder thereof to receive out of the net earnings, and the corporation shall be bound to pay, after a semi-annual dividend of Three dollars and fifty cents ($3.50), per share, together with all accumulated dividends have been set apart or paid to the holders of the Preferred Stock, a fixed cumulative dividend in the amount of Two Dollars ($2.00) per share, per annum, payable semi-annually on the fifteenth days of January and July in each year, before any dividends shall be set apart or paid on the Class B Stock.

Said Class B Stock may be issued as and when the board of directors shall determine and shall entitle the holder [fol. 307] thereof to receive out of the net earnings, and the corporation shall be bound to pay, after a semi-annual dividend of Three Dollars and fifty cents ($3.50) per share, together with all accumulated dividends have been set apart or paid to the holders of the Preferred Stock and after a

semi-annual dividend of One Dollar ($1.00) per share, together with all accumulated dividends have been set apart or paid to the holders of Class A Stock, a fixed cumulative dividend in an amount equal in dollars to all of the dividends set apart or paid to the holders of the Class A stock.

After a dividend or dividends have been set apart or paid to the holders of the Preferred Stock in the amount of Seven Dollars ($7.00) per share, together with accumulated dividends, for any one year, and after dividends have been set apart or paid to the holders of the Class A Stock in the amount of Two Dollars ($2.00) per share, together with accumulated dividends during said year, and after dividends have been set apart or paid to the holders of the Class B Stock in an amount equal in dollars to all the dividends of any kind set apart or paid to the holders of Class A Stock during said year, then one-half of the remaining earnings to be distributed during said year as dividends shall be declared and paid to the holders of Class A Stock in amounts equal share per share and the balance of one-half of said earnings declared as dividends during said year shall be declared and payable pro rata to the holders of Class B Stock.

Such Preferred Stock, at the discretion of the Company, shall be subject to redemption at One Hundred Dollars ($100.) per share, together with a sum equivilent to all unpaid accrued dividends thereon, on July 15th, 1928, or any dividend day thereafter, and any such redemption of Preferred Stock shall be made on not less than thirty days' notice, given in such manner as shall be provided in the By-Laws of the corporation and as shall be determined by resolution of the Board of Directors.

The holders of Preferred Stock shall, in case of liquidation or dissolution of the corporation, before any amount shall be paid to the holders of the Common Stocks, be entitled to be paid One Hundred Dollars ($100.) per share, together with a sum equivilent to all unpaid accrued dividends thereon after the payment of said sums as aforesaid, the holders of the Preferred Stock shall not be entitled to any other share or part of the assets of the corporation: [fol. 308] the remaining assets of the corporation shall be distributed to the holder of the Common Stocks, according to their respective rights.

The Preferred Stock shall have no voting power.

Such Class A Stock, at the discretion of the Company, shall be subject to redemption at five per cent (5%) more than the highest price for which any issue of the Class A Stock has been sold by the Company, on July 15th, 1928, or on any dividend day thereafter, and any such redemption of Class A Stock shall be made on not less than sixty days' notice given in such manner as shall be provided in the By-Laws of the corporation and as shall be determined by resolution of the Board of Directors.

In case the dissolution, voluntary or involuntary, after the Preferred Stock has received One hundred dollars ($100.) per share, plus accumulated dividends, Class A Stock shall receive an amount equal to the book value of Class A Stock at the time of incorporation, plus the amount received from the sale of Class A Stock up to the date of dissolution, plus any accumulated earnings due the Class A Stock, the total of these amounts to be divided by the number of Class A shares outstanding, which will constitute the amount that each share of Class A Stock shall receive out of the assets before any division be paid to Class B Stock. If there be any surplus or assets remaining after taking care of the Preferred Stock and Class A Stock, as hereinbefore stated, same shall be paid to Class B Stock up to an amount equal to the total amount paid to the Class A Stockholders. If there should then be any remaining surplus, same shall be divided one-half, share and share alike to Class A Stockholders and one-half, share and share alike, to Class B Stockholders.

Class A Stock shall have no voting power, the sole voting power shall be vested in Class B Stock.

The holders of any class of stock shall have no right as such to subscribe for any future issue of capital stock of the Corporation, and the Board of Directors shall, in their absolute discretion, be authorized to sell or issue future issues of capital stock to such person or persons, corporation or corporations, as they may determine.

V. The capital stock with which the corporation will commence business is subscribed by the incorporators as follows:

[fol. 309] Name	No of shares	No. Par.
F. R. Hansell	1	"
I. C. Clow	1	"
John A. MacPeak	18	"

The post-office address of each of the incorporators is Camden, N. J.

VI. The corporation shall keep at its registered office in this State the transfer books, in which the transfers of stock shall be registered, and the stock books, which shall contain the names and addresses of the stockholders and the number of shares held by them respectively, which shall at all times during the usual hours of business be open to the inspection of a stockholder in person with respect to his interest as such stockholder, or for a purpose germane to his status as such, upon application in writing to the registered agent of the corporation in charge of such office and having the custody of said books; but the registered agent may refuse permission to any stockholder to examine the same (except as to the entries affecting the shares owned by such stockholder), unless and until satisfied that such examination and the information to be acquired thereby are for a legitimate purpose and not for a purpose hostile to the interest of the corporation or its individual stockholder, and the determination of the registered agent shall be final, conclusive and binding upon all stockholders and all persons claiming under such stockholders.

VII. In furtherance and not in limitation of the powers conferred by statute, the Board of Directors are expressly authorized:

To hold their meetings, to have one or more offices, and to keep the books of the corporation within or, except as otherwise provided by statute, without the State of New Jersey, at such places as may from time to time be designated by them.

To determine from time to time whether, and, if allowed, under what conditions and regulations the accounts and books of the corporation shall be open to the inspection of the stockholders, and the stockholders' rights in this respect are and shall be restricted or limited accordingly, and no stockholder shall have any right to inspect any account or book or document of the corporation, except as conferred by statute or authorized by the Board of Directors or by resolution of the stockholders.

To make, alter, amend and rescind the By-Laws of the [fol. 310] corporation, to fix, determine from time to time and vary the amount to be reserved as working capital, to

determine the time for the declaration and payment and the amount of each dividend on the stock, to determine and direct the use and disposition of any surplus or net profits, and to authorize and cause to be executed mortgages and liens upon the real and personal property of the corporation, provided always that a majority of the whole Board concur therein.

Pursuant to the affirmative vote of the holders of a majority of the stock issued and outstanding, at a stockholders' meeting duly convened, to sell, assign, transfer or otherwise dispose of the property, including the franchises of the corporation as an entirety, provided always that a majority of the whole Board concur therein.

To appoint additional officers of the corporation, including one or more vice-presidents, one or more assistant treasurers, and one or more assistant secretaries; and, to the extent provided in the By-Laws, the persons so appointed shall have and may exercise all the powers of the president, of the treasurer and of the secretary respectively, provided, however, that all vice-presidents shall be chosen from the directors.

By a resolution passed by a majority vote of the whole Board, under suitable provisions of the By-Laws, to designate two or more of their number to constitute an Executive Committee, which committee shall, for the time being, as provided in said resolution, or in the By-Laws, have and exercise any or all the powers of the Board of Directors, which may be lawfully delegated, in the management of the business and affairs of the corporation, and shall have power to authorize the seal of the corporation to be affixed to all papers which may require it.

The Board of Directors and the Executive Committee shall, except as otherwise provided by law, have power to act in the following manner, viz.: a resolution in writing, signed as affirmatively approved by all the members of the Board of Directors or by all the members of the Executive or other Committee, and thereafter with original or with duplicated signatures inserted in the recorded minutes and properly dated, shall be deemed to be action by such Board or such Committee, as the case may be, to the extent therein expressed, with the same force and effect as if the same had

been duly passed by the same vote at a regularly convened meeting.

Subject to the foregoing provisions the By-Laws may [fol. 311] prescribe the number of directors to constitute a quorum at their meetings, and such number may be less than a majority of the whole number.

The corporation reserves the right to amend, alter, change, or repeal any provision contained in this certificate in the manner now or hereafter prescribed by statute for the amendment of the certificate of incorporation.

In witness whereof, we have hereunto set our hands and seals this third day of June, 1925.

F. R. Hansell (L. S.) I. C. Clow (L. S.) John A. MacPeak (L. S.)

Witness to the foregoing signatures: E. T. Vennel.

STATE OF NEW JERSEY,
County of Camden, ss:

Be it remembered that on this third day of June, A. D. one thousand nine hundred and twenty-five, before the undersigned, personally appeared F. R. Hansell, I. C. Clow and John A. MacPeak, who I am satisfied are the persons named in and who executed the foregoing certificate, and I having first made known to them, and each of them, the contents thereof, they did each acknowledge that they signed, sealed and delivered the same as their voluntary act and deed.

E. T. Vennell, Commissioner of Deeds.

Registered in the office of the corporation at Camden, in the County of Camden, this third day of June, 1925.

New Jersey Corporation Guarantee & Trust Company, Registered Agent, by F. R. Hansell, Secretary.

Received in the Camden County, N. J., Clerk's Office and recorded in the Clerk's Record, No. 52, on page 397, &c.

Wm. D. Brown, Clerk.

Endorsed: "Filed and Recorded Jun. 3, 1925. Thomas F. Martin, Secretary of State."

O 2433.

[fol. 312] Certificate of Change of Name of Frank Miller Co.

The location of the principal office in this State is at No. 304-306 Market street, in the City of Camden, County of Camden.

The name of the agent therein and in charge therof, upon whom process against this Corporation may be served is New Jersey Corporation Guarantee & Trust Company.

Resolution of Directors

The Board of Directors of the Frank Miller Co., a corporation of New Jersey, on this twenty-ninth day of January, A. D. 1926, do hereby resolve and declare that it is advisable that the name of this Company be changed from Frank Miller Co. to The Frank Miller Co., and do hereby call a meeting of the stockholders, to be held at the company's office, in the city of Camden, N. J., on the fifth day of February, 192-, at 10 A. M., to take action upon the above resolution.

Certificate of Change

The Frank Miller Co., a corporation of New Jersey, doth hereby certify that it has changed its name from Frank Miller Co. to The Frank Miller Co., said change of name having been declared by resolution of the board of directors (above recited) to be advisable, and having been duly and regularly assented to by the vote of two-thirds in interest of each class of stockholders having voting powers, at a meeting duly called by the board of directors for that purpose; and the written assent of said stockholders is hereto appended.

In witness whereof, said corporation has caused this certificate to be signed by its president and secretary, and its corporate seal to be hereto affixed the fifth day of February, A. D. 1926.

Frank C. Miller, President. W. S. Hollingshead, Secretary. (Corporate Seal.)

[fol. 313] State of New Jersey,
County of Camden, ss:

Be it remembered, that on this fifth day of February A. D. 1926, before me, the subscriber, a Commissioner of Deeds, personally appeared W. S. Hollingshead, Secretary

of the Frank Miller Co. *Company,* the corporation mentioned in and which executed the foregoing certificate, who, being by me duly sworn, on his oath says that he is such secretary, and that the seal affixed to said certificate is the corporate seal of said corporation, the same being well known to him; that Frank C. Miller is president of said corporation, and signed said certificate and affixed said seal thereto, and delivered said certificate by authority of the board of directors and with the assent of at least two-thirds in interest of each class of the stockholders of said corporation having voting powers as and for his voluntary act and deed, and the voluntary act and deed of said corporation, in presence of deponent, who thereupon subscribed his name thereto as witness.

And he further says that the assent hereto appended is signed by at least two-thirds in interest of each class of stockholders of said corporation having voting powers, either in person or by their several duly constituted attorneys in fact, thereunto duly authorized in writing.

John A. MacPeak, Commissioner of Deeds.

Stockholders' Assent to Change

We, the subscribers, being at least two-thirds in interest of each class of the stockholders of the Frank Miller Co. *Company* having voting powers, having, at a meeting regularly called for the purpose, voted in favor of changing the name of the Company from Frank Miller Co. to The Frank Miller Co., do now, pursuant to the statute, hereby give our written assent to said change.

Witness our hands this fifth day of February, A. D. 1926.

Stockholders	No. of shares
Frank C. Miller	1 Share.
R. M. Hollingshead, Jr.	1 Share.
R. M. Hollingshead	1 "
R. M. Bagley	1 "
W. S. Hollingshead	1 "
C. W. Tomlinson	1 "
The R. M. Hollingshead Corporation, by R. M. Hollingshead, Pres.	994 Shares.

[fol. 314] Endorsed: "Filed and Recorded Feb. 6, 1926. Thomas F. Martin, Secretary of State."

O-2433.

The Frank Miller Co.

Annual Report

The corporation above named, organized and registered under the laws of the State of New Jersey, does hereby make the following report in compliance with the provisions of an act of the Legislature of New Jersey, entitled "An Act concerning corporations (Revision of 1896)," and the various acts amendatory thereof and supplemental thereto:

First. The name of the corporation is The Frank Miller Co.

Second. The location of the registered office is Nos. 304-306 Market Street, Camden, New Jersey, and the New Jersey Corporation Guarantee & Trust Company is the agent upon whom process against the corporation may be served.

Third. The character of the business is manufacturing, and as otherwise specified in the certificate of incorporation.

Fourth. The amount of the authorized capital stock is 28,000 Shrs. No par.

The amount actually issued and outstanding is 7,000 Shrs. No par.

Fifth. The names of all the directors and officers and the time when the term of office of each expires are as follows:

Names of directors	Expiration of term
R. M. Hollingshead	3rd Monday January, 1929.
R. M. Bagley	do.
C. W. Tomlinson	do.
F. J. Semple	do.
R. M. Hollingshead, Jr.	do.
W. S. Hollingshead	do.

Officers	Expiration of term
President, F. J. Semple	3d Monday, January, 1929.
Vice-President, None	do.
Treasurer, C. W. Tomlinson	do.
Secretary, A. T. Reed	do.
Asst. Treasurer, N. R. DeLong	do.

[fol. 315] Sixth. The next annual meeting of the stockholders for the election of directors is appointed to be held on 3rd Monday January, 1929.

Seventh. The name of the corporation has been at all times displayed at the entrance of its registered office in this State, and the corporation has kept at its registered office in this State a transfer book, in which the transfers of stock are made, and a stock book, containing the names and addresses of the stockholders and the number of shares held by them respectively, open at all times to the examination of the stockholders as required by law.

The post office address of each of the foregoing directors and officers is Nos. 304-306 Market Street, Camden, New Jersey, which is the post office address of the registered office of the company.

The agent in New Jersey for the transfer of stock is the New Jersey Corporation Guarantee & Trust Company, Camden, N. J.

In witness whereof, this report is signed in behalf of the corporation by two of the directors of the said corporation, this 17th day of January, 1928.

F. J. Semple, C. W. Tomlinson.

Endorsed: "Filed Jan. 19, 1928. Joseph F. S. Fitzpatrick, Secretary of State."

STATE OF NEW JERSEY,
Department of State:

I, Joseph F. S. Fitzpatrick, Secretary of State of the State of New Jersey, do hereby Certify that the foregoing is a true copy of Certificate of Incorporation of the Frank Miller Co., Certificate changing the name of said Company to The Frank Miller Co., and Report of Directors and Officers of said corporation, as the same are taken from and compared with the originals filed June 3, 1925, February 6, 1926, and January 19, 1928, respectively, and now remaining on file and of record in my office.

In testimony whereof, I have hereunto set my hand and affixed my Official Seal at Trenton, this Twenty-first day of February, A. D. 1928.

Joseph F. S. Fitzpatrick, Secretary of State. (Seal.)

[fol. 316] Certificate of Incorporation of the The R. M. Hollingshead Co.

Registered Office with the New Jersey Corporation Guarantee & Trust Company, Camden, New Jersey

This is to certify, that we, the undersigned, do hereby associate ourselves into a Company under and by virtue of

the provisions of the Act of the Legislature of the State of New Jersey, for the purposes hereinafter mentioned, and to that end we do by this our certificate set forth, pursuant to "An Act Concerning Corporations, Revision of 1896":

First. That the name which we have assumed to designate such Company and to be used in its business and dealings is the The R. M. Hollingshead Co.

Second. That the place in this State where the principal office is to be situated is the City of Camden, in the County of Camden, and the business of the Company is to be conducted in said City and in such other Townships and Cities in the State as the nature and progress of the business of the corporation shall from time to time render necessary or desirable.

The Company shall have full power and authority to conduct its business and have one or more offices without the State of New Jersey, in such places in the several States and Territories of the United States and in such Foreign Countries as shall from time to time be found necessary or convenient for the purposes of the Company's business.

Third. That the objects for which this Company is formed are to do any or all of the things herein set forth to the same extent as natural persons might or could do, and in any part of the world, as principals, agents, contractors, trustees or otherwise, and either alone or in company with others, and in furtherance, and not in limitation, of the general powers conferred by the Laws of the State of New Jersey, it is hereby expressly provided that the Company shall have also the following powers:

To manufacture, purchase and deal in Leather Dressings, Oils, Soaps, Blackings and Polishes, and other specialties; also all grades of Soaps including Mill, Laundry, Toilet and Family Soaps, including the acquisition by purchase, manufacture or otherwise of all materials, supplies, ma- [fol. 317] chinery and other articles necessary or convenient for use in connection with and in carrying on the business herein mentioned, or any part thereof.

(a) To manufacture, purchase or otherwise acquire, hold, own, mortgage, pledge, sell, assign and transfer, invest, trade, deal in and deal with goods, wares and merchandise and property of every class and description.

(b) To acquire the good will, rights and property of any kind, and to undertake the whole or any part of the assets and liabilities of any person, firm, association or corporation, and to pay for the same in cash, stock of this company, bonds or otherwise.

(c) To apply for, obtain, register, purchase, lease or otherwise acquire, and to hold, own, use, operate, introduce and to sell, assign or to otherwise dispose of, to grant licenses in respect of or otherwise turn to account any and all trade marks, trade names and distinctive marks, and all inventions, improvements and processes used in connection with, or secured under Letters Patent of the United States or elsewhere, or otherwise, and with a view to the working and development of the same to carry on any business whether manufacturing or otherwise which the Company may think calculated directly or indirectly to effectuate these objects.

(d) To purchase or otherwise acquire, to hold, sell, assign, transfer, mortgage, pledge exchange or otherwise dispose of bonds, mortgages, debentures, obligations, or shares of the capital stock of any corporation, and the exercise in respect of all such property any and all the rights, powers and privileges of individual owners thereof.

(e) To draw, make, accept, endorse, discount, execute and issue promissory notes, bills of exchange, warrants, bonds, debentures, and other negotiable or transferable instruments.

(f) To procure the Company to be registered or recognized, to have one or more offices to carry on its operations and business, and unlimitedly to hold, purchase, mortgage, and convey real and personal property in any State or Territory of the United States, and in any Foreign Country or place.

To do all and everything necessary, suitable or proper, for the accomplishment of any of the purposes or attainment of any of the objects hereinbefore enumerated, or which shall at any time appear for the benefit of the Company, and in general to engage in any and all lawful business whatever, necessary or convenient, with all the powers which are now or may hereafter be granted to corporations [fol. 318] under the laws of the State of New Jersey.

It is the intention that the objects specified in the Third paragraph shall, except where otherwise expressed, in said paragraph, be nowise limited or restricted by reference to or inference from the terms of any other clause or other paragraph in this charter, but that the objects specified in each of the clauses of this paragraph shall be regarded as independent objects.

Fourth. The total amount of the capital stock of this Company is to be One hundred thousand dollars, ($100,000.00) and the number of shares into which it is to be divided is One thousand, (1000) shares of One hundred dollars ($100) each, of which One Thousand dollars ($1000.) is the amount of capital with which said Company will commence business.

Fifth. The names and residences of the incorporators and the number of shares subscribed for by each, the aggregate of which subscriptions is the said amount with which the Company will begin business, are as follows:

Name	Residence	Number of shares
R. M. Hollingshead	Camden, N. J.	5
C. H. Walton	Trenton, N. J.	4
W. B. Stewart	Merchantville, N. J.	1

Sixth. That the date on which the existence of said Company shall begin is the third day of January, 1898, and it shall continue for the full period now or hereafter allowed by the Laws of the State of New Jersey to corporations.

Seventh. 1. The Board of Directors shall have full and unrestricted power without the assent or vote of the stockholders to make, alter, amend and rescind the by-laws of this Company, to fix the amount to be reserved as working capital, to authorize and cause to be executed mortgages and liens upon the real and personal property of this Company, upon such terms and conditions as shall to the Board seem proper, and upon like terms and conditions, to sell, in the usual course of business, property both real and personal.

With the consent in writing and pursuant to vote of the holders of a majority of the stock issued and outstanding, the stockholders having been formally convened in a meeting, the Directors shall have power and authority to sell,

assign, transfer, mortgage or otherwise dispose of the [fol. 319] whole property of this corporation, or any part or portion thereof, on such terms and conditions as the Directors shall deem fit, right and just.

2. The Company may in its by-laws confer powers additional to the foregoing upon the Directors, and may prescribe the number necessary to constitute a quorum of its Board of Directors, which number may be less than a majority of the whole number.

3. The Board of Directors may, by resolution, passed by a majority of the whole Board, designate two or more of their number to constitute an Executive Committee, which Committee shall for the time being, to the extent provided in said resolution or in the by-laws of said Company, have and exercised all the powers of the Board of Directors in the management of the business and affairs of the Company, and have power to authorize the seal of the Company to be affixed to all papers which may require it.

4. No stockholders holding less than ten per cent. of the total stock issued shall be entitled to an examination of the books of account, or documents, or papers or vouchers of this Company, except by a resolution of the Board of Directors giving such privilege, and an examination shall then be had only at the time and place in the manner, to the extent and by the person named in such resolution of the Board of Directors, excepting from this entire restriction only such corporate records are, by statute, open to the inspection of stockholders.

This restriction shall not be construed to limit the right or power of any Director or Officer of the corporation to examine the books, papers or vouchers of the said corporation.

5. The Directors may hold their meetings, and have an office, and keep the books of the corporation (except the stock and transfer books) outside of this State.

In witness whereof. we have hereunto set our hands and seals, this twenty fourth day of December—1897.

R. M. Hollingshead (L. S.) C. H. Walton (L. S.)
W. B. Stewart (L. S.)

In presence of Saml. W. Bel[redacted].

[fol. 320] STATE OF NEW JERSEY,
County of Camden, ss:

Be it remembered that on this twenty fourth day of December A. D. Eighteen hundred and ninety seven before me a *A* Master in Chancery of said State personally appeared R. M. Hollingshead, C. H. Walton and W. B. Stewart who I am satisfied are the persons named in and who executed the foregoing certificate, and I having first made known to them, and each of them the contents thereof, they did each acknowledge that they signed, sealed and delivered the same as their voluntary act and deed.

Saml. W. Beldon, Master in Chancery of N. J.
(Seal.)

Received in the Camden County, N. J., Clerk's Office, December 29th, A. D. 1897, and recorded in the Clerk's Record No. 10, page 508, &c., of Corporations.

Robt. L. Barber, Clerk.

Endorsed: "Filed Dec. 31, 1897. George Wurts, Secretary of State."

The R. M. Hollingshead Co.

Annual Report

The corporation above named, organized and registered under the laws of the State of New Jersey, does hereby make the following report in compliance with the provisions of an act of the Legislature of New Jersey, entitled "An Act concerning corporations (Revision of 1896)," and the various acts amendatory thereof and supplemental thereto:

First

The name of the corporation is The R. M. Hollingshead Co.

Second

The location of the registered office is No. 840 Cooper Street, Camden, New Jersey, and R. M. Hollingshead is the agent upon whom process against the corporation may be served.

[fol. 321] Third

The character of the business is manufacturing and as otherwise specified in the certificate of incorporation.

Fourth

The amount of the authorized capital stock is ..... 320,000 Shrs. no par
The amount actually issued and outstanding is ..... 313,482 " " "

Fifth

The names of all the directors and officers and the time when the term of office of each expires are as follows:

Names of directors	Expiration of term
R. M. Hollingshead	3rd Monday January, 1929
R. M. Bagley	" " " "
C. W. Tomlinson	" " " "
L. E. Crandall	" " " "
R. M. Hollingshead, Jr.	" " " "

Officers	Expiration of term
President, R. M. Hollingshead	3rd Monday January, 1929
Vice-President, R. M. Bagley	" " " "
Vice-President, L. E. Crandall	" " " "
Treasurer, C. W. Tomlinson	" " " "
Secretary, A. T. Reed	" " " "
Asst. Secretary, T. J. Bagley	" " " "

Sixth

The next annual meeting of the stockholders for the election of directors is appointed to be held on the third Monday in January, 1929.

Seventh

The name of the corporation has been at all times displayed at the entrance of its registered office in this State, and the corporation has kept at its registered office in this State a transfer book, in which the transfers of stock are made, and a stock book containing the names and addresses of the stockholders and the number of shares held by them respectively, open at all times to the examination of the stockholders as required by law.

The post office address of each of the foregoing directors [fol. 322] and officers is No. 840 Cooper Street, Camden, New Jersey, which is the post office address of the registered office of the company.

In witness whereof, this report is signed in behalf of the corporation by two of the directors of the said corporation this 17th day of January, 1928.

C. W. Tomlinson. R. M. Hollingshead.

Endorsed: "Filed Jan. 23, 1928. Joseph F. S. Fitzpatrick, Secretary of State."

State of New Jersey

Department of State

I, Joseph F. S. Fitzpatrick, Secretary of State of the State of New Jersey, do hereby certify that the foregoing is a true copy of Certificate of Incorporation and last Annual Report of Officers, Directors, &c., of The R. M. Hollingshead Co., as the same is taken from and compared with the originals filed December 31, 1897 and January 23, 1928, respectively, and now remaining on file and of record in my office.

In testimony whereof, I have hereunto set my hand and affixed my Official Seal at Trenton, this twenty-first day of February, A. D. 1928.

Joseph F. S. Fitzpatrick, Secretary of State. (Seal.)

Certified Copy

UNITED STATES OF AMERICA,
For the District of New Jersey, ss:

I, George T. Cranmer, Clerk of the United States District Court in and for the District of New Jersey, do hereby certify that the annexed and foregoing is a true and full copy of the original Certificate of Incorporation and Last Annual Report of Officers, Directors, &c., of the R. M. Hollingshead Co. now remaining among the records of the said Court in my office.

In testimony whereof I have hereunto subscribed my name and affixed the seal of the aforesaid Court at Trenton this 13th day of April, A. D. 1928.

George T. Cranmer, Clerk, by Charles S. Chevrier, Deputy Clerk. (Seal.)

3
1
1

[fol. 323] UNITED STATES DISTRICT COURT, DISTRICT OF NEW JERSEY

In Equity

No. 2759

THE BASSICK MANUFACTURING COMPANY, Plaintiff,

vs.

THE FRANK MILLER CO., Defendant

ORDER

This cause having come on to be heard before the Court upon plaintiff's motion to dismiss, the same having been argued by counsel, and the Court being fully advised in the premises, it is

Ordered:

That the above entitled cause be dismissed with the taxable costs to the defendant to be taxed by the clerk.

J. L. Bodine, United States District Judge.

Certified Copy

UNITED STATES OF AMERICA,
For the District of New Jersey, ss:

I, George T. Cranmer, Clerk of the United States District Court in and for the District of New Jersey, do hereby certify that the annexed and foregoing is a true and full copy of the original Order now remaining among the records of the said Court in my office.

In testimony whereof, I have hereunto subscribed my name and affixed the seal of the aforesaid Court at Trenton this 13th day of April, A. D. 1928.

George T. Cranmer, Clerk, by Charles S. Chevrier, Deputy Clerk. (Seal.)

[fol. 324] PLAINTIFF'S EXHIBIT 2—Filed Apr. 26, 1928

IN THE UNITED STATES DISTRICT COURT, DISTRICT OF NEW JERSEY

Equity. No. 2759

BASSICK MANUFACTURING CO., Plaintiff,

vs.

THE FRANK MILLER CO., Defendant

AFFIDAVIT OF FRANK J. SEMPLE, CONTRA PLAINTIFF'S MOTION TO DISMISS

STATE OF PENNSYLVANIA,
County of Philadelphia, ss:

Frank J. Semple, being duly sworn, deposes and says:

I am a resident of Haverford, Pennsylvania, and I am President and active chief executive officer of The Frank Miller Co., defendant in the above entitled suit.

I am generally familiar with the suit brought against my Company by the Bassick Mfg. Co. of Chicago. I am also aware of the pendency of a suit by the Bassick Mfg. Co. against the R. M. Hollingshead Co., a corporation of New Jersey, in the United States District Court in Memphis, Tenn.

I understand that Mr. Bagley, Vice-President of the R. M. Hollingshead Co. visited Mr. Otis, Vice President of the Bassick Mfg. Co. in Chicago, about a little over two weeks ago, with a view of soliciting the Bassick Co.'s business for certain preparations.

I have read the Bassick Co.'s motion to dismiss the above entitled cause without prejudice, and I have also read the affidavits of J. E. Otis, Jr., and Elwood Hansmann in support of the Bassick Co.'s Motion.

I am making this affidavit in opposition to the plaintiff's Motion to Dismiss without prejudice.

The final hearing in this cause was had on November 29th, 1927. Within a week after the final hearing in this suit involving my Company, we received a letter from the Bassick Mfg. Co. of Chicago, Ill., dated December 5th, [fol. 325] 1927, a copy of which is attached hereto as Ex-

hibit "A", which appeared to be an inquiry of the Bassick Mfg. Co. as to the possibility of my company selling to the Bassick Mfg. Co. some of our products, to be put up, however, under the Bassick Co.'s trademark "Alemite." This letter of the Bassick Mfg. Co. was duly responded to in our letter of December 10th, 1927, a copy of which is also attached hereto as Exhibit "B." After this we had some further correspondence with the Bassick Mfg. Co. relative to their taking on some of our preparations, as will be seen from copies of this correspondence submitted herewith in chronologic order as Exhibits "C," "D," "E," "F" and "G" respectively.

We realized, however, that in view of the fact that most of our products (though not all of our products) are manufactured for us and sold to us by the R. M. Hollingshead Co., we would in all probability not be able to resell these products to the Bassick Mfg. Co. at a profit to us, in competition with the R. M. Hollingshead Co. or any other manufacturer of this class of merchandise.

In view of this, I finally referred this matter to the R. M. Hollingshead Co. so as to give them an opportunity to make a bid for this business of the Bassick Mfg. Co.

Mr. Otis, in his affidavit on page 2, apparently referring to this visit by Mr. Bagley, states:

"Mr. Bagley informed me that The Frank Miller Co. of Camden, N. J. was and is a subsidiary of the R. M. Hollingshead Co."

(meaning the defendant in the Bassick vs. R. M. Hollingshead Co., pending in the District Court of Memphis, Tenn.).

The Frank Miller Co. is not a subsidiary of the R. M. Hollingshead Co., the Memphis defendant, because the R. M. Hollingshead Co. does not own any of the voting stock of The Frank Miller Co.

Mr. Otis, on page 2 in his affidavit, then endeavors to create the impression that The Frank Miller Co. was purchased by the R. M. Hollingshead Co. "a few years ago" for the purpose of selling the jobbing trade under a different brand, the same products which the R. M. Hollingshead Co. sells to the dealers direct. This is likewise not true.

The business of The Frank Miller Co. dates back to 1838, as will be revealed by the affidavits of myself and Mr. Frank C. Miller heretofore filed in this cause, which [fol. 326] affidavits now constitute part of the record in this case upon final hearing.

The business of the founder, the original Frank Miller, was expanded and was reorganized a number of different times throughout its career of ninety years.

The individual business of Frank Miller was first formed into a copartnership of "Frank Miller & Sons", back in about 1878, and in 1892 this same business was reorganized in the form of a corporation of New York.

In 1918 the business was reorganized as a corporation of Delaware, though continuing in its old location in New York.

In 1921, as a result of many adversities, The Frank Miller Co., though having a very large business and an established trade and goodwill in the harness making, carriage and automobile trades, was forced into a receivership and was then taken over and again reorganized with the aid of the private capital of Mr. Richard M. Hollingshead, as a New York corporation; the new corporation retaining its old location, personnel and active executive officer, Mr. Frank C. Miller.

In 1924, the business of The Frank Miller Co. (New York corporation) was moved from New York to its present location in Camden, N. J. where it rents one floor of the new eight story building of the R. M. Hollingshead Co. About this time the Frank Miller Co. was reincorporated as a corporation of New Jersey, the instant defendant.

Mr. Otis, in his affidavit, states that The Frank Miller Co. was bought by the R. M. Hollingshead Co.

"for the purpose of selling the jobbing trade under a different brand the same products which the Hollingshead Co. sells to dealers direct."

The truth of the matter is that The Frank Miller Co. was bought in 1921 by Mr. Richard M. Hollingshead personally, and solely because of its long established business (since 1838) and because of its well established trade and goodwill, and solely with the view of reorganizing this old and well

established business upon a sound financial basis, which since has been done, and the business of The Frank Miller Co. today continues distinct and apart from the business of The R. M. Hollingshead Co., both in its management, finances, trade and its goodwill, as a corporation of New Jersey.

Mr. Otis then goes on to state, on page 2 of his affidavit, that

[fol. 327] "My interview on February 9 with Mr. Bagley was the first intimation that I had received that The R. M. Hollingshead Company owned or controlled The Frank Miller Company, which The Bassick Manufacturing Company had sued for patent infringement in a case involving substantially identically the same lubricating equipment as was enjoined by the United States District Court in the suit brought against The R. M. Hollingshead Company, as shown by the exhibits submitted with the affidavit of Elwood Hansmann, which I have read."

Mr. Otis then goes on to state that this "first intimation" resulting from Mr. Bagley's visit was confirmed by subsequent information

"that the R. M. Hollingshead Co. owns and controls The Frank Miller Co." and that

"A financial report just received by me from a commercial agency states that 'The Company is controlled by the R. M. Hollingshead Co. and it occupies a portion of the building of the R. M. Hollingshead Co.' "

I would first like to correct Mr. Otis' "first intimation" as well as Mr. Otis' "subsequent information," as well as the obviously false impression bound to be created by Mr. Otis' statement that the interview with Mr. Bagley on February 9th last, was in fact his "first intimation" of any connection between The Frank Miller Co. and the R. M. Hollingshead Co.

The real facts of the matter, which are and have been of public knowledge for years, and obviously within the reach of any lawyer or business executive, are very clearly and accurately stated in Moody's Industrial Manual for 1927, as well as in Moody's Industrial Manual for the preceding years.

A photostatic copy of pages 2435 to 2437 inclusive of the 1927 edition of Moody's Industrial Manual is submitted herewith as Exhibit "H", while a photostatic copy of pages 2100 to 2102 inclusive of Moody's 1926 edition is submitted herewith as Exhibit "I".

It is obvious that the true facts relative to the Memphis defendant, R. M. Hollingshead Co., and the instant defendant, The Frank Miller Co., were at all times available and well within the reach of Mr. Otis much prior to the filing of this suit against The Frank Miller Co.

As a matter of fact, Mr. Otis' first letter to my Com-
[fol. 328] pany (submitted herewith as Exhibit "A") discredits the impression which Mr. Otis seeks to create, that the status of The Frank Miller Co. *only recently came to his knowledge.*

Page 2 of Mr. Otis' affidavit refers to the commercial agency's report "just received" relative to The Frank Miller Co., informing Mr. Otis that The Frank Miller Co. "occupies a portion of the building of the R. M. Hollingshead Co." This information "just received" by Mr. Otis (to wit: since February 9th, 1928) was apparently thoroughly embedded in Mr. Otis' mind when he dictated his (decoy) letter of inquiry of December 5th, 1927, addressed to The Frank Miller Co. (Exhibit "A" herewith) because he addressed his letter to The Frank Miller Co., Hollingshead Bldg., Camden, N. J., whereas the telephone directory and other local directories merely list The Frank Miller Co.'s address as 9th & Cooper Sts., Camden, N. J., and not as the "Hollingshead Bldg."

I observe that Mr. Otis does not submit for the Court's inspection the source of his "subsequent" information (line 21, page 2, Otis affidavit), nor does he submit the financial report "just received" from a commercial agency, (line 26, page 2, Otis affidavit).

Mr. Otis, on the bottom of page 2, then goes on to say that this financial report "just received" from a commercial agency also states that I "was formerly Vice-President of the R. M. Hollingshead Co."

I was *not* formerly the Vice-President of the R. M. Hollingshead Co., nor was I in any way ever connected with the R. M. Hollingshead Co. in any capacity whatsoever, nor was I ever employed by the R. M. Hollingshead Co.

I was elevated to my present position from that of Vice-President of The Frank Miller Co., succeeding Mr. Frank C. Miller upon his recent retirement June 1st, 1927.

It is now obvious to me that The Bassick Co.'s first letter to my Company, directly following the final hearing in this cause, was nothing more than a decoy to inveigle me or some other officer of my Company into some communication with Mr. Otis so as to enable Mr. Otis to make "recent" discovery of some story to form the basis or an excuse for moving to dismiss this suit without prejudice, after the fil-
[fol. 329] ing of proofs and final hearing in this cause.

It is obvious that Mr. Otis was well aware of the facts in the premises well before February 9th, 1928, when in conversation with Mr. Bagley, he got his "first intimation" of things which were of public knowledge for years, and the knowledge of which he inadvertently displayed in his original letter of December 5th, 1927 (Exhibit "A").

The facts in the matter were obviously within easy reach of the Bassick Co. before and ever since the bringing of the instant suit, and certainly before my Company prepared and presented its comprehensive defense record at great expense, by merely looking up these facts in Moody's Industrial Manual, which is as well known to any business executive or lawyer as a telephone directory is to the layman and which is referred to by a layman either to obtain the telephone number or the address of any person or business.

It is obvious to me also that this most recent of the series of dilatory and evasive steps taken by the plaintiff ever since the filing and presentation of defendant's comprehensive record, is nothing more than a last attempt of the plaintiff to avoid an adjudication of this patent monopoly upon a full and adequate defense record set up by a legitimate and dignified business organization and instead, to obtain a decree in some other jurisdiction, under more favorable circumstances and without the handicap of a defense record such as has been filed in the instant case, which, I am advised, the plaintiff has so far been unable successfully or reasonably to rebut in any vital respect.

While I am not versed in the law, yet it seems to me that it would certainly be a perversion of justice to permit a defendant to be put to the enormous expense that my Com-

pany has been put in preparing, submitting and arguing a complete and adequate defense, and then to permit the plaintiff to withdraw its suit without prejudice only to have the same questions determined and adjudicated in some other jurisdiction thousands of miles away, under circumstances more favorable to plaintiff.

The business of my Company is separate and distinct from the business of the R. M. Hollingshead Co., the Memphis defendant, and Mr. Norman R. DeLong and myself have full, complete and active charge of all the affairs of The Frank Miller Co. Mr. DeLong and myself determine the sales policies of the Company, that is, determine The [fol. 330] Frank Miller line. I have charge of our sales organization and keep in constant touch with our trade, and it is I, with the assistance of Mr. DeLong, who determines upon each and every product sold or to be sold by The Frank Miller Co.

The business of my Company is not only separate and distinct from the business of the R. M. Hollingshead Co. insofar as its control, management, direction or insofar as its personnel, sales force and offices are concerned, but my Company also possesses a goodwill in the trade, based upon ninety years of continuous and unbroken business in serving the laundry, harness, carriage and (since about 1905) the automobile trade, with a number *number* of high grade preparations and specialties.

In view of the many conflicting opinions and general confusion as to the real scope and extent of the Bassick Co.'s adjudicated patent monopoly under the patents in suit, my Company discontinued the sale of all lubricating equipment many months prior to the starting of this suit, as it was my Company's intention to await the decision in some of the cases against manufacturers, then pending, particularly in New York and Delaware.

My Company's temporary discontinuance of all lubricating equipment and apparatus during this period of confusion was effected at a great sacrifice and loss of business and goodwill in the trade. Since the Bassick Co. some months subsequent thereto instituted this suit and filed its proofs, my Company has expended approximately $11,000.00 in the preparation and presentation of a complete and adequate defense, including a comprehensive search of

the prior art of pressure lubrication and bayonet coupling, as well as the preparation of exhibit models exemplifying each of the main prior art devices.

It would seem to me that while an inventor is entitled to all the protection the court can give him in his monopoly, yet that monopoly must be based upon something which the inventor contributed to the then known prior art, and I believe that my Company after having gone to the great expense of apprising the Court of all the facts should be likewise protected against the unwarranted encroachment upon public rights, under the guise of a patent, by the Bassick Mfg. Co., who I believe is endeavoring to expand its monopoly to mechanical devices and expedients which have long been in the public domain.

I am familiar with the lubricating equipment which was sold by my Company.

[fol. 331] I have examined the drawing accompanying Mr. Hansmann's affidavit filed in support of the Motion to Dismiss, and this examination is the first instance that I have ever learned of a "coupler" construction such as portrayed in Mr. Hansmann's drawing.

To the best of my knowledge and belief, none of the "couplers" forming part of the "Frank Miller Lubricator" or lubricating equipment, possessed an internal construction such as portrayed by Mr. Hansmann's drawing. The Frank Miller "coupler" is aptly portrayed by the drawing of Defendant's Exhibit No. 5 heretofore filed in this suit.

And further deponent sayeth not.

Frank J. Semple.

Sworn and subscribed to before me this 27th day of February, 1928.

Nettie Bussinger, Notary Public.

IN THE UNITED STATES DISTRICT COURT, DISTRICT OF NEW JERSEY

In Equity

No. 2759

BASSICK MFG. CO., Plaintiff,

vs.

THE FRANK MILLER CO., Defendant

AFFIDAVIT OF NORMAN R. DELONG, CONTRA PLAINTIFF'S MOTION TO DISMISS

STATE OF PENNSYLVANIA,
County of Philadelphia, ss:

Norman R. DeLong, being duly sworn, deposes and says:

I am of lawful age, reside in Haddonfield, New Jersey, and I am assistant Treasurer of The Frank Miller Co., the defendant in the above entitled suit.

I have full charge of the offices of The Frank Miller Co., and I am an active executive officer of The Frank Miller [fol. 332] Co., second in charge, and I am thoroughly familiar with all the products of The Frank Miller Co.

I am also generally familiar with the litigation in which my Company is involved with the Bassick Mfg. Co., relative to our right to sell pressure lubricating equipment.

I have read the Motion of the Bassick Co. to dismiss their suit against us without prejudice, and have also read the affidavit of Mr. J. E. Otis and Mr. Elwood Hansmann in support of the Bassick Co.'s notice to dismiss.

I am making this affidavit in opposition to the Bassick Company's Motion to dismiss without prejudice, because I believe that such dismissal at this stage of the suit, particularly in view of the flimsy and obviously unfounded cause given by Mr. Otis, would in effect be a great injustice to my Company, which has been put to very great expense of approximately $11,000.00 in the preparation and presentation of a defense to the Bassick Co.'s suit.

I have also read a telegram dated February 22nd, 1928, addressed to our attorneys, Messrs, Wiedersheim & Fair-

banks by Mr. Lynn A. Williams, the Bassick Co.'s Chicago counsel, which telegram reads as follows:

"Confirming my telephone conversation today with Mr. Kalish and in view of recent exchange of telegrams providing for the filing of briefs on March fifth in Bassick versus Frank Miller please be advised that we have just learned of the connection between the Hollingshead Company and the Frank Miller Company, as a result of which we are moving as quickly as possible to dismiss the suit against the Frank Miller Company."

What the Bassick Co. is apparently endeavoring to do at this stage of the proceedings is to set up some reasonable excuse for dismissing their suit without prejudice and this excuse as it appears from Mr. Otis' affidavit page 2, and from the telegram of Mr. Williams, is apparently that pretended facts relative to The Frank Miller Co. and the R. M. Hollingshead Co., another New Jersey corporation and the defendant in a suit in Memphis, (Bassick vs. R. M. Hollingshead Co.) have been "just learned" by the Bassick Co. as a result of an interview which Mr. Otis had with Mr. Bagley on February 9th, which interview Mr. Otis states, was his "first intimation" in the premises.

[fol. 333] Without first going into detail to discredit each and every one of the many misstatements in Mr. Otis' affidavit, I merely want to state, that in spite of the highly ingenious and cunning steps taken by Mr. Otis to "just learn" or to get his "first intimation" so recently and at this late stage in the suit, of matters which have been of public knowledge for many years past, Mr. Otis apparently still did not arrive at the true facts.

The true facts in the matter are aptly set forth in Moody's Industrial Manual for the last few years, as will be evidenced by the photostatic reproductions of the appropriate pages of the last two annual issues of Moody's Industrial Manual, to wit: that of 1927 and that of 1926 (Exhibits "H" and "I" of Mr. Semple's affidavit).

I also submit herewith as Exhibit "J" a photostatic copy of pages 1757 and 1758 of Poor's Industrial Section for 1927, which, like Moody's, made public all facts concerning the instant defendant, long before the plaintiff brought this suit.

While I am but a layman, and do not know whether the true facts relative to The Frank Miller Co. and the R. M. Hollingshead Co. would justify the dismissal of the suit at this late stage, without prejudice, yet I would like to state that whatever significance the true facts may have, such facts were available to the plaintiff before the institution of this suit, and certainly before the filing of the Frank Miller Co.'s very comprehensive and expensive defense record.

It is apparent to me that Mr. Otis has successfully inveigled Mr. Bagley into having an interview with him, merely to justify the impression which he seeks to create by his affidavit, that he only recently had "just learned" of some facts which form the ground for dismissing the Bassick Co.'s suit at this late stage, without prejudice.

My company conducts a successful and dignified business in preparations and specialties for the harness, carriage and automobile trades (also for household uses) and possesses a well established trade and goodwill of its own, with a background of ninety years of continuous, progressive and honorable business in these fields.

I note Mr. Otis' statement that The Frank Miller Co. is "owned and controlled" by the R. M. Hollingshead Co., New Jersey corporation, defendant in a suit in Memphis. While I do not know the legal significance of the true facts involved, nor of the legal status of my Company in view [fol. 334] of the facts, but from my own intimate knowledge, I would say that my Company is not controlled nor owned by the R. M. Hollingshead Co. (Memphis defendant).

The business of my company is entirely independent from that of any other company; maintains its own offices, its own active executive officers (Mr. Frank J. Semple and myself), and maintains its own force of salesmen and enjoys its own trade, reputation and good will for a period many times greater than the existence of the R. M. Hollingshead Co. which is a comparatively young concern.

The Frank Miller Co., about six years ago, as a result of some financial difficulties was reorganized as a New York corporation, and refinanced on a sound basis by Mr. Richard M. Hollingshead; said New York corporation having since (1924) been succeeded by a New Jersey corporation having the same name. The entire voting stock of the

present Frank Miller Co. (defendant) is now (for the past few years) owned by the R. M. Hollingshead Corp., a corporation of Delaware, (not the Memphis defendant) which also owns some of the stock of the R. M. Hollingshead Co., New Jersey Corporation, defendant in Memphis. The R. M. Hollingshead Corp., a Delaware corporation, also owns stock in several other business enterprises.

I have examined the drawing accompanying Mr. Hansmann's affidavit in support of the Bassick Co.'s Motion to Dismiss.

I have, on numerous occasions, examined the internal construction of the "coupler" elements of The Frank Miller Co.'s lubricant dispensing equipment and I am thoroughly familiar with the "coupler" construction of The Frank Miller Co.'s lubricant dispensing equipment.

The coupler portrayed in the drawing accompanying Mr. Hansmann's affidavit is not a coupler such as The Frank Miller Co. has sold and it is some spurious construction attached to the Frank Miller grease dispensing unit of plaintiff's Exhibit "M" of the affidavit of J. E. Otis, Jr., dated July 29th, 1927, filed herein.

The "couplers" employed by The Frank Miller Co. on its grease dispensing units are of the construction portrayed in the drawing of defendant's Exhibit No. 5 accompanying the affidavit of Mr. Schwaiger, filed on behalf of The Frank Miller Co. in this suit. For the purposes of comparison I submit herewith as my Exhibit "K", a photostatic reproduction, side by side, of The Frank Miller Co.'s bayonet type of "coupler" and the spurious coupler which [fol. 335] the plaintiff submits in connection with the defendant's grease dispensing equipment.

And further deponent sayeth not.

Norman DeLong.

Subscribed and sworn to before me this 27th day of February, 1928.

Nettie Bussinger, Notary Public.

IN THE UNITED STATES DISTRICT COURT, DISTRICT OF NEW JERSEY

In Equity

No. 2759

BASSICK MANUFACTURING CO., Plaintiff,

vs.

THE FRANK MILLER CO., Defendant

AFFIDAVIT OF ROBERT M. BAGLEY CONTRA PLAINTIFF'S MOTION TO DISMISS

STATE OF PENNSYLVANIA,
County of Philadelphia, ss:

Robert M. Bagley, being duly sworn, deposes and says:

I am of lawful age, reside in Haddonfield, New Jersey, and I am Vice-President of the R. M. Hollingshead Co., a corporation of New Jersey, having its principal place of business in Camden, N. J., and having regular and established places of business or branches in more than twenty cities in the United States.

My company is engaged in litigation with the Bassick Mfg. Co., in the United States District Court in Memphis, Tenn., where we have one of our branch offices, in which litigation our right to sell a grease dispensing pump is involved.

On Thursday, February 9th, last, I called at the Chicago offices of the Bassick Mfg. Co. and sent in my card. I was directed to the office of Mr. Otis. I explained to Mr. Otis [fol. 336] that The Frank Miller Co. had turned over to my company some correspondence which had passed between himself and The Miller Co., with reference to their furnishing the Bassick Co. a line of automobile products under their trade-mark "Alemite."

I explained that the R. M. Hollingshead Co. manufactured almost all of the products for The Frank Miller Co. and since The Frank Miller Co. did not manufacture their merchandise, they decided to let my company make a bid directly to the Bassick Co.

Mr. Otis then asked me in what way my Company and The Frank Miller Co. were connected. I repliel that the R. M. Hollingshead Co. made the most of the Frank Miller products, and that the R. M. Hollingshead Co. owned some of the stock of The Frank Miller Co. Mr. Otis replied that he thought there was some connection between the two companies, as he had noted the addresses were the same.

I also told Mr. Otis that The Frank Miller Co. sold their products to jobbers while "Whiz" products were sold direct to dealers. I also told Mr. Otis that The Frank Miller Co. had been in business many years, selling to jobbers, and that The Frank Miller Co. was acquired at a receiver's sale six or seven years ago.

After an intermission of about two hours, we renewed our negotiations along the same lines and I explained to Mr. Otis that we had ample facilities for producing a line of automobile products under their brand, and that I felt we could no doubt furnish their products at a saving over the cost at which they could make them themselves, as we would of course manufacture in larger quantities than they would when they started. Mr. Otis stated that while they had discussed the advisability of marketing a more complete line of automobile products, that they had not definitely decided to do so.

Mr. Otis then had their sales manager, Mr. Hiter, come in, to whom I was introduced. After some preliminary conversation, Mr. Hiter or Mr. Otis stated that they felt that inasmuch as their salesmen were calling regularly on the class of trade who sold these products, that they could probably sell the line without very greatly increasing their selling expenses but they had not definitely decided as to whether they would sell the line. About this time, I asked Mr. Otis if we could not figure with him on furnishing their greases, as we were also in an excellent position to manufacture this product and that we might be able to effect a considerable saving over what they were then paying for [fol. 337] grease. Mr. Otis made some comments as to the accessibility to water transportation and was told that it would cost no more to deliver merchandise by water from our plant that it would from New York.

During the conversation, Mr. Otis mentioned the matter of the litigation between his company and my company and

intimated that he did not believe it was practicable for us to do business together if the litigation was going to continue. I told him that the litigation was instigated by his company, and that we were pretty good scrappers (or something to that effect), and did not feel that we would allow any interference with what we considered our rights. Mr. Otis then stated that he felt that we were somewhat out of our line when we began selling mechanical equipment (grease dispensing pumps) and that he felt that our business was more in chemical products and that their business was in mechanical appliances and that each of us might be better off if we stayed out of the other's field.

I then told Mr. Otis that we in turn felt that his Company invaded our field somewhat when they began selling greases, and that the addition of greasing equipment to our line, was on account of the fact that they had added greases to their line and were using their patented greasing equipment as a leverage to sell greases. Mr. Otis then explained that this was not the case; that they did not intend to force the trade to use their greases on account of their being the manufacturers of greasing equipment. I told Mr. Otis that while it might be true this was not their policy, it seemed to be the concensus of opinion of those with whom we had come in contact, that the trade felt that they were being forced to use "Alemite" greases.

Mr. Otis also explained that they disliked very much our attitude in the litigation, particularly the publishing of a booklet entitled "Memorandum on the Bassick-Alemite Situation in its Relation to Lubricants" and also inquired as to how long we proposed to keep up the litigation with them, and again stated that it would be out of the question for them to do business with us so long as the litigation continued.

Mr. Otis then expressed himself to the effect that his company has been successful in eliminating from the field most of their competitors in grease pumps, and that he considered my company their main menace in their grease pump situation. Mr. Otis also suggested that we would not gain much by winning the suit, because by doing so we would only open up the market for everybody to make [fol. 338] grease pumps. I explained to Mr. Otis that our main interest was the free and unmolested sale of grease and that so long as the trade was dependent entirely upon

the Bassick Mfg. Co. for every conceivable lubricating equipment or pumps with which to dispense grease, we were at a very great disadvantage in competing with the Bassick Co. in the grease line and we see no harm in anybody and everybody making a grease dispensing pump which we think the public have a right to make for the purpose of putting grease into whatever grease cups may be put on the market on automobile and other machinery, including their patented Gullborg grease cups, provided the grease dispensing pumps do not infringe any of the patents of the Bassick Co.

Mr. Otis or Mr. Hiter then inquired why we did not buy our lubricating equipment from them, as they manufactured a large line and could probably furnish us as cheaply as anyone else. I then asked Mr. Otis if he sold a "gun" or "booster" which could be satisfactorily attached to the hose leading from the grease tank of the equipment we had previously sold. He replied that he did not believe they had such an equipment but could make something which would be suitable. He showed me several samples of "guns" which he offered to sell me, which, however, were not adaptable to our use.

I then told Mr. Otis that I could furnish him a sample of our "booster" (a lever-operated pump), as I would like to have him make for us and it was agreed that I do so. I asked Mr. Otis if he was familiar with the "booster" we had used on the equipment we had previously sold and explained roughly what it was like. He said he knew about what it was like and that they would have no difficulty in furnishing this equipment. I then asked him to quote me a price as soon as he received our sample, with a hose about two feet long with an "Alemite" coupler on the end of the hose. I told him that I would have this "booster" sent from our Chicago branch the next day, which was done.

I then told Mr. Otis that I would be very glad to figure with them on their requirements of grease for the various grades and sizes of packages and he promised to send us a sample of each grade of grease to Camden, in order that we might quote on the identical grease that they used, rather than have us secure samples from the trade.

During the conversation I asked Mr. Otis why they had licensed some of the manufacturers of grease pumps, and was advised by him that he licensed only three manufacturers and did not intend to license any others. I asked

[fol. 339] him why they licensed the Cincinnati Ball Crank Co. and was informed that he felt that the Bassick Co. could outsell them and that they were receiving ten percent on the net sale of the equipment as royalty which they considered a very good arrangement.

Since my original interview with Mr. Otis, I have also been in touch with him over the 'phone, relative to the various matters, as to which we were endeavoring to enter into some business relations.

I was certainly surprised when I was informed by Mr. E. Hayward Fairbanks that my interview with Mr. Otis had been utilized, and in fact made the sole basis of a certain Motion to Dismiss the suit which the Bassick Co. had brought against The Frank Miller Co., as I had considered my conference with Mr. Otis of a purely business nature, and while we casually and in a general way made some reference to the litigation in which the Bassick Co. and the Hollingshead Co. were engaged in Memphis, I certainly had no idea that Mr. Otis had any other object in view than some possible business relations with my Company.

At the request of Mr. E. Hayward Fairbanks, I have read the affidavit of Mr. J. E. Otis, Jr., and while I cannot see how my personal visit to the offices of the Bassick Co. can be of any significance, yet I want to correct some of the statements made by Mr. Otis in his affidavit.

Mr. Otis, on page 2 of his affidavit, states that I informed him

"that the Frank Miller Co. of Camden, N. J., was and is a subsidiary of the R. M. Hollingshead Co."

According to my best recollection of my extended conversation with Mr. Otis more than two weeks past, I did not inform Mr. Otis of such a condition. Probably what I did tell Mr. Otis was that the R. M. Hollingshead Co. owns some stock in The Frank Miller Co. and what Mr. Otis says about The Frank Miller Co. being a subsidiary of the R. M. Hollingshead Co. is nothing more than Mr. Otis' inference. The fact of the matter is that the R. M. Hollingshead Co. owns some preferred (non-voting) stock, but does not own any of the voting stock of The Frank Miller Co. and hence, judging merely from the commonly accepted significance of such a term, The Frank Miller Co. is not in any sense of the word a subsidiary of the R. M. Hollingshead Co., because the latter owns no voting stock.

Mr. Otis then states that his interview on February [fol. 340] 9th with me was his "first intimation" that he received that the R. M. Hollingshead Co. owned or controlled The Frank Miller Co. Regardless of whether this was Mr. Otis' "first intimation" or not, I do not understand how he could have received that intimation from his conversation with me, because I neither told him nor suggested the existence of such situation;—not because it would make any difference to me, but chiefly because it would not have been in line with the true facts in the matter.

The true facts in the matter can be learned by anyone upon consulting such well-known annual publications as "Moody's Industrial Manual" or "Poor's Industrials," or by obtaining a report from anyone of the several mercantile agencies, each of which steps, in my opinion, are the common and well accepted sources of all such information.

I also want to correct Mr. Otis' statement that Mr. Frank J. Semple was at one time Vice-President of the R. M. Hollingshead Co. That is not the same and I do not see how any report of a commercial agency could possibly have given Mr. Otis such information, as Mr. Semple has never been connected with my company in any manner.

As Vice-President of the R. M. Hollingshead Co., I am its active executive and devote my entire time to its affairs.

While I am a director in The Frank Miller Co., I do not have charge of its management in any sense, nor to any extent whatsoever, as the entire active management of The Frank Miller Co. is in the hands of Mr. Frank J. Semple, its president, and Mr. Norman R. DeLong, its Assistant Treasurer.

I am likewise a director in several other corporations.

And further deponent sayeth not.

Robert M. Bagley.

Subscribed and sworn to before me this 27th day of February, 1928, Nettie Bussinger, Notary Public.

[fol. 341] IN THE UNITED STATES DISTRICT COURT FOR THE DISTRICT OF NEW JERSEY

In Equity

No. 2759

BASSICK MFG. CO., Plaintiff,

vs.

THE FRANK MILLER COMPANY, Defendant

AFFIDAVIT OF E. HAYWARD FAIRBANKS, CONTRA PLAINTIFF'S MOTION TO DISMISS

STATE OF PENNSYLVANIA,
County of Philadelphia, ss:

E. Hayward Fairbanks being duly sworn, deposes and says, I am of lawful age, am a member of the Bar, am of counsel for defendant herein, and am familiar with all the procedings herein.

I am also of counsel for the defendant in the case of Bassick Mfg. Co. v. R. M. Hollingshead Co., pending in the District Court in Memphis, Tennessee, which latter case was argued on or about January 14th, 1927, as a motion for preliminary injunction in said Memphis District.

I am familiar with the papers and proceedings in said Memphis suit, as I argued this case personally in Memphis, in behalf of the defendant there. At the time this Memphis case was submitted, the cases involving this Gullborg patent here in suit were under advisement in the Circuit Court of Appeals for the Sixth Circuit. I think Mr. Otis has fairly stated the present situation in the Memphis district.

The structure of the drawing attached to Mr. Hansmann's affidavit is dissimilar from the defendant's coupling structure involved in the Memphis suit, which Mr. Hansmann refers to as being Exhibit K in Mr. Davis' affidavit there. This Exhibit K or defendant's coupling in the Memphis suit lacked entirely the central ball valve and the central spring pressing upwardly thereon portrayed in the drawing attached to Mr. Hansmann's affidavit.

I would further state that so far as I am aware the coupling Exhibit K in the Memphis suit has never been

[fol. 342] passed upon by any Circuit Court of Appeals. There is therefore an entirely different question of infringement involved in the instant case from that which was involved in the Circuit Courts of Appeal for the Sixth and Seventh Circuits.

As to Plaintiff's Right to Dismiss at This Stage

Directly upon the service of the writ upon defendant here last Summer defendant made a careful validity search, prepared at great expense a number of full sized physical specimens illustrative of the prior art devices many of which so far as I am aware had never been before any Court. Defendant also retained an experienced patent expert and a number of weeks were expended in good faith in the preparation of the defense record in this case. All told a number of thousands of dollars have been spent by this defendant in preparing this case for trial or argument upon motion for preliminary injunction.

During the argument on November 29th, 1927, it was suggested by the Court and agreed to by counsel, that the case be considered as on final hearing, briefs to be filed later. Defendant's counsel have been engaged for a number of weeks past in the preparation of defendant's brief. On February 15th, 1928 a letter was received from your Honor, dated February 14th, inquiring as to the briefs, following which the following correspondence took place between my office and plaintiff's New York counsel:

"February 15th, 1928.

Stephen Philbin, Esq., 5 Nassau Street, New York, N. Y.

Re Bassick vs. Frank Miller

Dear Sir:

Under date of February 14th we received a letter from Judge Bodine, a carbon of which was apparently sent you.

Will you kindly advise us if we can agree on an approximate date, say a couple of weeks or so hence, so that briefs for both sides may be filed and exchanged?

We are inclosing herewith a carbon of our letter to Judge Bodine.

Yours very truly, (Sgd.) E. Hayward Fairbanks.

EHF:AD.
Encl.

[fol. 343] Feb. 16, 1928—P. M. 4 48

CDV351 14Xu—CD New York, N. Y. 16 437P

E. Hayward Fairbanks, DeLong Bldg., Chestnut and 13th Sts. Philadelphia, Penn.:

Suggest exchange and file briefs in Frank Miller Case March fifth stop Please wire.

(Sgd.) Fish, Richardson and Neave.

February 16, 1928.

Fish, Richardson & Neave, Esqs., 5 Nassau Street, New York, N. Y.

Re Bassick vs. Frank Miller

DEAR SIRS:

We have your wire reading:

"Suggest exchange and file briefs in Frank Miller Case March fifth stop Please wire."

In response, would say that if it is your plan to submit your brief merely typewritten, then date of March 5th is agreeable to us. If, however, you propose to submit your brief in printed form we should like to do likewise, and in that event we would require about a week more for printing.

Kindly advise.

Yours very truly, (Sgd.) E. Hayward Fairbanks.

EHF:AD.

New York, February 18, 1928.

E. Hayward Fairbanks, Esq., DeLong Building, Chestnut & 13th Streets, Philadelphia, Pa.

Re Bassick vs. Frank Miller

DEAR MR. FAIRBANKS:

We are very much obliged to you for your letter of February 16th.

We would like to agree to exchange and file typewritten briefs on March 5th. Kindly wire me on Monday confirming this.

Yours very truly, (Sgd.) Harry R. Ashton.

A:K.

[fol. 344] Philadelphia, Feb. 20, 1928.

Henry R. Ashton, 5 Nassau Street, New York, N. Y.:

Suggestion in your letter February eighteenth satisfactory. Writing.

E. Hayward Fairbanks.

February 20, 1928.

Fish, Richardson & Neave, Esqs., 5 Nassau Street, New York, N. Y.

Re Bassick vs. Frank Miller

Att'n Mr. Ashton

In reply to your letter of February 18th, I have wired you as follows:

"Suggestion in your letter February eighteenth satisfactory. Writing."

I think that we will be able to file our typewritten brief by March 5th, on which day we will send you a copy, you to do likewise.

Yours very truly, Wiedersheim & Fairbanks.

EHF:AD.

Copy

February 21, 1928.

Honorable Joseph L. Bodine, Judge, U. S. District Court, Trenton, N. J.

Re Bassick vs. Frank Miller

DEAR JUDGE BODINE:

Immediately upon receipt of your letter I communicated with Mr. Williams' office in Chicago and with Mr. Fairbanks, counsel for the defendant, and we have agreed, subject, of course, to your approval, that typewritten briefs be submitted on March 5th.

Mr. Williams has asked me to say, with respect to his delay in submitting his brief, that difficulty in procuring copies or access to the defendant's exhibits made it im-

possible for him to complete his brief at the time he had available for the purpose some weeks ago. Since that time a large number of court engagements have made it impossible for him to prepare the brief.

Respectfully, (Sgd.) Henry R. Ashton.

A:K.

[fol. 345] New York, February 21, 1928.

E. Hayward Fairbanks, DeLong Building, Chestnut & 13th Sts., Philadelphia, Pa.

Re Bassick v. Frank Miller

DEAR MR. FAIRBANKS:

I wish to thank you for your telegram and letter of February 20th, stating that it is agreeable to you to file typewritten briefs on March 5th and send us a copy on that day.

We will mail copies of our brief to you on March 5th, and to Judge Bodine on March 3rd.

Yours very truly, (Sgd.) Henry R. Ashton.

A:K.

P. S.—I inclose copy of letter written judge Bodine.

February 24, 1928.

Honorable Joseph L. Bodine, Judge, United States District Court, Trenton, N. J.

Re Bassick vs. Frank Miller Co.

MY DEAR JUDGE BODINE:

I am very much obliged to you for your letter of February 22nd, stating that it is agreeable to you that briefs be filed in this case on March 5th.

Respectfully, (Sgd.) Henry R. Ashton.

A:K.

CC to Mr. Fairbanks.

Copy

United States District Court, District of New Jersey

Chambers of Judge Bodine

Trenton, N. J., February 22, 1928.

My Dear Mr. Ashton:

I have your letter of the 21st instant relative to the briefs in the case of Bassick v. Miller being submitted on March 5th. This date is agreeable to me.

Very truly yours, (Sgd.) Joseph L. Bodine.

[fol. 346] Henry R. Ashton, Esq., 5 Nassau Street, New York City.

New York, February 24, 1928.

E. Hayward Fairbanks, Esq., DeLong Building, Chestnut & 1[illegible], Philadelphia, Pa.

Re Bassick v. Frank Miller

Dear Mr. Fairbanks:

I enclose copy of a letter received from Judge Bodine this morning, dated February 22nd, and copy of my reply.

Yours very truly, (Sgd.) Henry R. Ashton.

Encs.
A:K.

February 25, 1928.

Fish, Richardson & Neave, Esqs., #5 Nassau Street, New York, N. Y.

In re Bassick vs. Frank Miller

Att. Mr. Henry R. Ashton

Dear Mr. Ashton:

I have your letter of February 24th enclosing copies of Judge Bodine's letter of February 22nd and your letter to the Judge of February 24th, for all of which I thank you.

I wrote Judge Bodine on February 21st, as per the enclosed carbon.

Very truly yours, (Sgd.) E. Hayward Fairbanks.

EHF:RH.
Encl.

It will thus be seen from the foregoing that as lately as February 21st, 1928, Mr. Ashton of plaintiff's N. Y. counsel wrote your Honor and also wrote me and that it was agreeable to him and to Mr. Williams, of plaintiff's Chicago counsel, to have typewritten briefs filed on March 5th, which was confirmed by Mr. Ashton's letter of February 24th. On February 24th, plaintiff's motion to dismiss was received at my office in Philadelphia, the same apparently having been prepared in Chicago, two or three [fol. 347] days previously during apparently the very period that Mr. Ashton, Mr. Williams and myself had agreed, subject to your Honor's approval, on the day of March 5th for the filing and exchange of briefs.

I am totally at a loss to understand plaintiff's tactics after putting defendant to an expense of many thousands of dollars in preparing this case for trial, and who several months after the case was argued come in a week or so before the date which has been approved and agreed upon for the filing of briefs, and seek to snatch the case from this Court, and have it dismissed.

Not only are the equities entirely opposed to such an extraordinary procedure, but also the following cases which have been collated infra, not for the purpose of instructing the Court, but that the Court may conveniently look at the same, if it cares to.

Bearing in mind that the defendant has been put to an expense of many thousands of dollars to present and prepare its case for hearing, and that proofs on both sides have been closed and filed, and the case argued three months back, and that plaintiff has within the past week agreed to file briefs before your Honor, on or before March 5th, 1928, it is impossible to find any theory or any case which supports plaintiff's making this extraordinary motion at this stage. The Chief Justice has applied the rule in the following language:

"The usual ground for denying a complainant in equity the right to dismiss his bill without prejudice, at his own costs, is that the cause has proceeded so far that the defendant is in a position to demand on the pleadings an opportunity to seek affirmative relief, and he would be prejudiced by being remitted to a separate action. Having been put to the trouble of getting his counter case properly pleaded and ready, he may insist that the cause

proceed to a decree. Chief Justice Taft, in the matter of Skinner Eddy Corp., 265, U. S. 86, 68 L. Ed. 912, 44 S. Ct. 446."

This rule has been followed uniformly.

D. C. Mass. 1023: Complainant in an infringement suit is not entitled of right to dismiss without prejudice on the ground that the patent is involved in an interference proceeding in the Patent Office where large interests are concerned, where defendant has been put to great expense in the taking of proofs and the case is such that it may be [fol. 348] disposed of on the merits. (Claims 1 and 5 of Patent No. 1,371,413, held void on their face. Hill v. Federal Optical Co., 295 F. 213.)

D. C. Pa. 1912: While it is the general rule in equity, as at law, that plaintiff may withdraw or discontinue his suit on payment of costs, subject only to the qualification that the discontinuance shall not deprive the defendant or others of any right, or have the effect of harassing or inconveniencing them it is a matter of discretion with the chancellor whether defendant has a substantial interest which may be affected. Churchward International Steel Co. v. Carnegie Steel Co., 1286, F. 158. Leave to Discontinue Infringement Suit Without Prejudice Denied, Where Defendant had gone to Great Expense in Preparing Defense.

D. C. Pa. 1912: In suit for infringement of patent, in which defendant set up invalidity for lack of patentable novelty, want of invention by the patentee, and prior use, where defendant afforded complainant every opportunity to examine its engineers, superintendents, and foremen with a view to discovering infringement, and had gone to great trouble and expense to prepare its defense, complainant will not be given leave to withdraw or discontinue the action without prejudice to a new suit at any time when it can obtain more specific and complete information of defendant's methods of Manufacture.

C. C. A. 6th Cir. 1926: Plaintiff held not entitled to dismissal without prejudice as against any party, where one adverse party had sufficient basis for getting affirmative relief. Automotive Products Corporation v. Wolvertine Bumper and Specialty Co., 15 F. (2nd) 745, 747.

Discontinuing Suit—Leave Not Granted

Leave to discontinue for no cause beyond desire to bring a new suit "in view of what has developed subsequent to the closing of the proofs," denied, when defendant had been at large expense beyond taxable costs and disbursements. American Steel & Wire Co. v. Mayer & Englund Co., 121 F. 127 (N. Y.).

Right of Plaintiff to Discontinue Suit as to One Patent

C. C. A. 2nd Cir. 1924: Under District Court Equity Rule 8, authorizing the Court after issue joined to refuse to permit plaintiff to discontinue if defendant is thereby preju-
[fol. 349] diced, even though his only prejudice is the vexation and expense of a possible second suit upon the same cause of action, it was error to permit plaintiff to discontinue suit as to one patent, where such withdrawal was substantially prejudicial to defendant. (Decree 298 F. 33, reversed.) E. Fredericks v. Eugene, 3 (2d) F. 543.

When Bill May be Dismissed on Complainant's Motion

A complainant has the right to move to dismiss the bill, paying the taxable costs, except in three instances; (1) When there has been a hearing or a decree entered; (2) When the defendant asks or deserves affirmative relief; (3) When the dismissal will deprive the defendant of some substantial right which has accrued since the suit was brought. American Steel & Wire Co. v. Mayer & Englund Co., 123 F. 204 (N. Y. 1903).

Right to Dismiss Complaint After Testimony Taken

C. C. Conn. 1908: Complainant may not, at the beginning of taking rebuttal testimony, give notice that it would dismiss the bill of complaint so far as it charged infringement of one of the patents sued on, and proceed upon the other patent in suit, even though such notice is perfected, where the proofs taken prior to the rebuttal clearly show the invalidity of the first mentioned patent, "It would be a perversion of justice to stop at the point of find that" such patent "is not infringed. It is clearly invalid, and the decree which will follow this opinion must say so."

Time Saver Co. v. Stamford Trust Co. Same v. Pequonnock Nat. Bank, 165 F. 348.

Motion to Dismiss Bill at Final Hearing

A motion by the complainant to have its bill dismissed without prejudice, upon payment of defendant's costs made at final hearing, after a preliminary injunction has been issued (though addressed to the sound discretion of the Court) will not be granted where such proceedings have been taken as entitled the defendant to a decree adjudicating the questions at issue upon the merits, nor where similar suits are pending in other districts, based upon the same patents. Georgia Pine Turpentine Co. v. Bilfinger, et al., 129 F. 131 (N. C.).

[fol. 350] Discontinuance Without Prejudice—Refusal of Leave

C. C. A. 2nd, Cir. 1919: Where a complainant had obtained a favorable adjudication on its patent in one district, which entitled it, on application, to a preliminary injunction as of course in a pending suit in another district, it was not error for the Court to refuse permission to discontinue the second suit without prejudice. Individual Drinking Cup Co. v. Union News Co., 250 F. 625.

The foregoing show the different ways in which the Courts have applied the rule, for which defendant is contending and it would appear that plaintiff is merely trifling with the Court in making such a motion at this stage.

I would call attention to the fact that as to Exhibit "M" referred to in Mr. Otis' last affidavit, there is not a scintilla of proof in plaintiff's moving papers (forming part of the record on final hearing in this case) that this Exhibit "M" was purchased from defendant, or that defendant ever made or sold the same. There is no proof that defendant ever made or sold a "coupler" like unto the spurious "coupler" portrayed by the drawing attached to Mr. Hansmann's affidavit.

I cannot refrain in conclusion from adverting to plaintiff's tactics in putting defendant, The R. M. Hollingshead Company in the Memphis suit to all the expense possible and vexing and harassing that defendant just as it is en-

deavoring to do with the instant defendant. Notwithstanding, R. M. Hollingshead Co. has its main place of business in Camden, in the District of New Jersey, where there are four experienced patent Judges almost constantly sitting—plaintiff brought this Tennessee suit against The R. M. Hollingshead Co. in Memphis, which is a trip of two nights and a day from Camden, and for Camden or Philadelphia counsel to go to Memphis and return to attend any hearing there, it requires the best part of a week at an expense of something under a thousand dollars. Inasmuch as the instant case has already been argued, it is respectfully submitted that plaintiff's motion to dismiss should be denied and the orderly procedure of a cause in equity not departed from.

I am familiar with all the defendant's records in the Bassick Co.'s litigations decided by the Courts of Appeal in the Sixth and Seventh Circuits and I believe that not only were the issues of infringement different there, but [fol. 351] none of such defendant's records were as full and complete as the instant defendant's records, which may account for the plaintiff's sudden resolution to attempt to dismiss this cause without prejudice, notwithstanding it has already been argued on final hearing.

E. Hayward Fairbanks.

Sworn to and subscribed before me, this 27th day of February, 1928. Nettie Bussinger. Commission expires Mch. 2, 1929.

EXHIBIT "A" (SEMPLE AFFIDAVIT)

The Bassick Manufacturing Co.

Alemite Products

2650 North Crawford Avenue,

Chicago, Illinois

December 5, 1927.

Mr. Frank J. Semple, % The Frank Miller Co., Hollingshead Bldg., Camden, New Jersey.

DEAR SIR:

We contemplate adding to our line and distribution a number of products substantially like some of those which

you handle under the Frank Miller name. The idea is to put them up in cans and bottles having the "Alemite" trade mark and to distribute them through our present organization.

Although we are now engaged in litigation because of your infringement of our patents covering the Alemite and Zerk lubricating apparatus, in which you are endeavoring to have our patents held invalid, we should like in connection with these new products to avoid the expense and liability of retaliatory patent litigation on your part. We are therefore writing you directly to ascertain whether you have patents covering any of the following products. If so, we would appreciate your giving us the numbers and dates of such patents, thereby enabling us to avoid their infringement, or to ascertain their validity, etc.

[fol. 352] As to those products which are patented, you might be willing to sell them to us in bulk or put up in Alemite cans or bottles supplied by us and at prices which would be mutually advantageous. We are particularly interested in:

Tire Enamel
Tire Cover
Rubber Cement
Rim and Gasket Cement
Top Patch Cement
Body Patch Outfit
Rubber Patch Outfit
Dry Cleaner
Tar and Road Oil Remover
Radiator Leak Preventative
Radiator Anti-Freeze Compound
Neats Foot Clutch Compound
Reflector Polish
Auto Body Polish
Nickel polish
Metal Polish
Wax Auto Finish
Lusterize
Rain Spot Remover
Polishing Cloth
Auto Soap
Brilliant Polish
Black Automobile Enamel

Engine Enamel
Repair Enamel
Khaki Lining Dressing
Auto Top Dressing
Leather Dressing
Cushion Dressing.

We are anxious to get the details of this matter settled as quickly as possible, and would therefore appreciate a prompt reply.

Yours very truly, The Bassick Manufacturing Co.,
by J. E. Otis, Jr., Vice President.

[fol. 353] EXHIBIT "B" (SEMPLE AFFIDAVIT)

Copy

Frank C. Miller, President. Cable Address: Miller Camden
F. J. Semple, Vice President. Bentley's and all Codes

The Frank Miller Co.

(Emblem) Manufacturers of

Chemical Specialties for the Automobile,

Saddlery and Household Trades

Camden, New Jersey

December 10th, 1927.

The Bassick Manufacturing Co., 2650 N. Crawford Avenue, Chicago, Ill.

Attention Mr. Otis, Vice-Pres.

DEAR SIRS:

We have your letter of the 5th inst.

We note your plan of adding to your distribution a line of automobile specialties and other preparations similar to our line.

We shall be glad to cooperate with you to this end, and we believe that we could no doubt supply you with our preparation as suggested by you, either in bulk or put up

in final containers with your trade mark "Alemite," at mutually advantageous prices and probably with a saving to you of all difficulties and uncertainties of possible litigation commonly incident to the entry into a new line of manufacture.

With a view of going into details of your plan as quickly as possible, as suggested by you, we shall be pleased to arrange for a conference either at your offices or ours, at our mutual convenience.

Yours very truly, The Frank Miller Company, by

—— ——.

[fol. 354] EXHIBIT "C" (SEMPLE AFFIDAVIT)

The Bassick Manufacturing Co.

Alemite Products

2650 North Crawford Avenue,

Chicago, Illinois

December Twenty-second 1927.

The Frank Miller Co., Camden, N. J.

Attention Mr. W. R. DeLong

GENTLEMEN:

This will acknowledge your letter of December 10, advising that you would be glad to cooperate with us in working out a line of automotive specialties.

We have decided to hold this matter in abeyance until after the first of the year, at which time we will doubtless get in touch with you again.

Yours very truly, The Bassick Manufacturing Co.,
J. E. Otis, Jr., Vice President.

J. E. Otis, Jr.:FAN.

EXHIBIT "D" (SEMPLE AFFIDAVIT)

Jan. 9, 1928.

The Bassick Mfg. Co., 2650 No. Crawford Ave., Chicago, Ill.

Attention J. E. Otis, Jr.

GENTLEMEN:

Since your letter of Dec. 22nd we haven't heard from you as to when it will be convenient for you to take up the matter of Auto Specialties mentioned in a previous letter to us.

We will be glad if you will advise us if it will be convenient to take this matter up at your office the latter part of this week.

Yours very truly, The Frank Miller Co.

RF.

[fol. 355] EXHIBIT "E" (SEMPLE AFFIDAVIT)

Western Union

Chicago, Ill., January 10, 1928.

Confirmation—Mr. M. R. DeLong, The Frank Miller Co., Camden, N. J.:

Re letter ninth Mister Otis out of town will not return until latter part of month when letter will receive his attention.

The Bassick Manufacturing Co.—Neuffer.

Paid.
Chge. Western Union Acct.—Fan.
10:10 A. M.

EXHIBIT "F" (SEMPLE AFFIDAVIT)

Jan. 27, 1928.

The Bassick Mfg. Co., 2650 No. Crawford Ave., Chicago, Ill.

Attention: J. E. Otis, Jr.

GENTLEMEN:

On Jan. 9th we wrote you asking that you kindly advise us when it would be convenient to take up the matter of Auto Specialties mentioned in your previous letter to us.

On the 10th instant we received a telegram to the effect that you would be out of town until the latter part of the month.

We will be glad if you will advise us, if it will be convenient to take this matter up, during the next week, on a day that would be convenient to you.

Yours very truly, The Frank Miller Co.

RF.

356

(Here follow photolithographs, side folios 356-366.)

Management: OFFICERS: W. Westerman, Pres; E. P. De Monchy Rzn, Vice-Pres.; W. A. Mees, Sec. DIRECTORS: W. Westerman, D. G. van Bueningen, Dr. A. G. Kröller, Ir. W. F. Leemans, The Hague; E. P. DeMonchy Rzn, Th. A. Fruin, W. A. Mees, C. W. F. P. Baron Sweerts de Landas Wyborgh, J. H. Veder, Rotterdam; S. P. van Eeghen, Dr. A. F. Van Hall, P. Hofstede de Groot, Amsterdam; Jan. Lels, Ir. J. A. Kalff. MANAGING DIRECTORS: J. Rijperda Wierdsma, Chairman, A. Gips, W. F. Piek, F. s'Jacob, Rotterdam. ANNUAL MEETING: In March. OFFICE: Rotterdam. NEW YORK OFFICE: 24 State St.

Comparative Income Account, Years Ended Dec. 31

(*In guilders*)

	1926	1925	1924	1923	1922	1921
Net income	7,463,308	3,508,706	3,950,432	2,740,705	2,194,143	10,754,344
Depreciation	5,390,421	6,292,881	6,358,358	6,369,414	5,877,390	7,542,063
Interest charges	1,840,927	1,694,149	1,879,165	1,882,285	570,482	.....
Miscellaneous	114,372	17,656	112	4,639	30,356	472,456
Dividends	.....	.....	.....	.....	.....	2,726,250
Surplus	117,588	(d)4,495,980	(d)4,287,203	(d)5,515,633	(d)4,284,085	13,575

Division of Profits. After deduction of expenses, fixed charges, etc., stockholders are entitled to a dividend of 5% over the paid capital. From the balance the board of managing directors receive 12½%, the directors 2½%, the consortium 5% and stockholders 80%, of which a part at the discretion of the directors is available for the creation of a special reserve fund.

Comparative Balance Sheet, as of Dec. 31

(*In guilders*)

ASSETS:	1926	1925	LIABILITIES:	1926	1925
Property and plant (net)	3,350,002	3,550,002	Capital stock	25,000,000	25,000,000
Steamships (net)	63,008,843	68,688,843	Bonded debt	30,000,000	30,000,000
Interest in other cos	17,381,954	21,793,833	Accounts payable	4,409,129	3,256,036
Cash	7,272,773	1,389,232	Reserves	29,608,784	29,512,022
Notes and bills receivable	3,278,738	1,970,944	Miscellaneous liabilities	11,673,916	14,459,195
Accounts receivable	5,253,544	3,081,276	Undivided profits	26,701	26,701
Prepaid charges	226,181	328,552	Surplus	117,588	.....
Miscellaneous assets	1,064,083	1,460,272			
Total	100,836,118	102,253,954	Total	100,836,118	102,253,954

Bonded Debt: 1. Holland-America Line 25-year sinking funds 6s:

Authorized—30,000,000 guilders; outstanding, 30,000,000 guilders.

Dated—May 1, 1922; due May 1, 1947.

Interest Payable—M&N 1 in New York at office of White, Weld & Co. or at the office of R. Mees & Zoonen, Rotterdamsche Bankvereeniging or Amsterdamsche Bank, all in Rotterdam, Amsterdam and the Hague. Bonds and coupons are payable in the Netherlands in guilders and in New York in U. S. dollars at the official rate of exchange, i. e. the rate of exchange for sight drafts for guilders of the Kingdom of the Netherlands and gold dollars of the United States, fixed by the New York official opening on the respective days on which bonds and coupons are presented to the bankers, and failing such official quotation the average opening quotation of 2 leading banks dealing in foreign exchange at New York, selected by the bankers.

Trustee—Nederlandsche Administratie Trustkantoor (Netherlands Administration and Trust Office), Amsterdam.

Denomination—Coupon, 500 and 2,500 guilders.

Callable—Non-callable except for sinking fund.

Sinking Fund—Beginning May 1, 1928, sufficient to retire by annual drawings one-twentieth of the issue at par and interest, thus retiring the entire issue by maturity.

Security—A direct obligation of the company. There is no mortgage on existing property of the company and company agrees that none will be created while these bonds are outstanding.

Purpose—Proceeds used for the completion of the building of 3 passenger steamers aggregating 42,400 tons and 9 cargo steamers aggregating 98,200 tons.

Listed—On New York and Amsterdam stock Exchanges.

Tax Status—Free of all taxes of the Kingdom of the Netherlands. Company does not pay U. S. normal income tax. Rating Baa

Offered—(20,000,000 guilders) in April, 1922 at $920 flat per 2,500 guilders by White, Weld & Co., and Blair Co., New York; balance (10,000,000 guilders) offered simultaneously in Holland by Rotterdamsche Bankvereeniging, Amsterdamsche Bank, and R. Mees & Zoonen.

Price Range	1926	1925	1924	1923
High	93⅞	89¾	84½	92
Low	78¾	79	72	71

Capital Stock: 1. Holland-American Line stock: Authorized, 50,000,000 guilders; outstanding, 25,000,000 guilders. Original capitalization was 2,000,000 guilders of 1,000 guilders par value. Par reduced to 500 guilders in 1876 when a 50% reduction in capitalization was ordered. In 1881 capitalization was increased by 1,000,000 guilders, in 1890, 2,000,000 in 1899, 2,000,000 and in 1901 2,000,000. In 1902 the authorized capital was increased to 20,000,000 and in 1920 to 50,000,000. Initial dividend of 2.975% paid in 1874. Nothing was paid during 1875-1878. In 1879, 5% was paid; 1880, 5%; 1881, 10%; 1882, 9%; 1883 to 1887, none; 1888, 11%; 1889, 17%; 1890 to 1897, none. In 1898 dividends were again resumed and continued without interruption, ranging between 2½% in 1898 and 50% in 1915. In 1918, 40%; 1919, 50%; 1920, 25%; 1921, 10%; none thereafter to Dec. 31, 1926. In addition extra dividends have been paid ranging from 2 guilders in 1898 to 320.30 guilders in 1915. Rating B

Stock transferred and registered at company's office, New York. Listed on Rotterdam, Amsterdam, The Hague and Brussels stock Exchanges.

THE R. M. HOLLINGSHEAD COMPANY

History: Incorporated under the laws of New Jersey, Dec. 31, 1897. Business established in 1890; consists of the manufacture and distribution of 98 different chemical products, chiefly for automobile and household use, such as soaps, polish, greases, enamel, leather dressing, etc., sold under the trade-name "Whiz." Plant located at Camden, N. J., contains 255,000 sq. ft. of floor space. Also operates a 4-story plant at Bowmanville, Ont., and a 7-story administration and warehouse building at Camden, N. J. Maintains 37 branches and 25 warehouses in the United States, Canada and Cuba.

R. M. Hollingshead Corp.: Incorporated under Delaware laws in May, 1925. Owns entire outstanding class B common stock and approximately 95% of class A common stock of The R. M. Hollingshead Co. Also owns entire common stock of The Frank Miller Co. of Camden, N. J. Latter distributes a line of products similar to those of The R. M. Hollingshead Co. but sells only to jobbers. Practically entire capital stock of R. M. Hollingshead Corp. is owned by officers and employees of The R. M. Hollingshead Co.

Management: (R. M. Hollingshead Co.) OFFICERS: R. M. Hollingshead, Pres,; R. M. Bagley, Vice-Pres. and Sec.; C. W. Tomlinson, Treas. DIRECTORS: R. M. Hollingshead, R. M. Bagley, C. W. Tomlinson. GENERAL AUDITORS: Ernst & Ernst, COMPANY'S OFFICE: Camden, N. J.

Comparative Income Account, Years Ended Dec. 31

	1926	1925	1924	1923	1922	*1921
Net sales	$5,605,338	$5,802,300	$5,744,342	$4,995,943	$3,468,852	$2,411,556
Oper. expenses and deprec...	5,460,757	5,442,517	5,107,808	4,432,348	3,033,482	2,263,112
Net income	$144,581	$359,783	$636,534	$563,595	$435,370	$148,444
Margin of profit	*2.58%*	*6.20%*	*11.08%*	*11.28%*	*12.55%*	*6.16%*
Other income	11,087	17,964	23,827	14,449	9,236	6,738
Total income	$155,668	$377,747	$660,361	$578,044	$444,606	$155,182
Interest charges	87,566	83,549	99,883	72,528	28,436	30,323
Balance	$68,102	$294,198	$560,478	$505,516	$416,170	$124,859
Taxes	1,400	32,400	68,265	60,161	44,501	18,562
Other charges	9,847	13,138	12,103	6,740	.....	.....
Balance for dividends	$57,355	$248,660	$480,110	$438,615	$371,669	$106,297
Preferred dividends	94,374	34,102	11,856	11,856	11,856	30,651
Common dividends	218,750	36,836	66,802	62,376	20,792	
Surplus	(d) $255,769	$177,722	$401,452	$364,383	$339,021	$75,646
Earned per share, preferred	$4.25	$18.44	$35.61	$32.53	$27.57	$7.88
Earned per share, common..	.....	0.51	1.29	1.15	0.92	0.04

*Year ended Sept. 30. †Based on new capitalization.

Comparative Balance Sheet, as of Dec. 31

ASSETS:	1926	1925	LIABILITIES:	1926	1925
Plant and equipment	$1,909,703	$1,574,752	Capital stock	†$2,885,250	$2,885,250
Good-will, trade-marks, etc.	1	1	Bonded debt	900,000	950,000
Invest. in sub. and affil. cos.	269 109	287,205	*Notes payable*	*750,000*	*225,000*
Cash	*209,935*	*339,621*	*Accounts payable*	*167,037*	*136,441*
Accounts receivable	*1,506,157*	*1,513,437*	*Accruals*	*45,406*	*37,986*
Inventories	*1,134,616*	*880,273*	*Affiliated company accounts*	*81,291*	.....
Life insurance, cash value	*41,900*	.....	*Federal taxes*	*1,400*	*32,400*
Treasury bonds	28,653	129,069	Sinking fund reserve	108,000	58,000
Other assets	63,764		Surplus	436,013	688,623
Deferred charges	210,559	289,342			
Total	$5,374,397	$5,013,700	Total	$5,374,397	$5,013,700

*After depreciation. †Represented by 13,482 preferred, 275,000 class A and 25,000 class B no par shares.

Working Capital: *1925, current assets, $2,733,331; current liabilities, $431,827; net current assets, $2,301,504.*
1926, current assets, $2,892,608; current liabilities, $1,045,134; net current assets, $1,847,474.

Table A—Bond Records

R. M. Hollingshead Co. 1st 7s..... Interest Payable F&A — Maturity F. 1, 1938 — Authorized $1,000,000

Outstanding	Five Year Average Income	Interest Required per Annum	Times Interest Earned	Security	Salability	Rating
$872,000	$443,285	$61,040	7.3	Good	Fair	Ba

1. R. M. Hollingshead Co. first sinking fund gold 7s:
Authorized—$1,000,000; outstanding, $872,000; in reasury, $28,000; retired to Dec. 31, 1926, $100,000; in ddition $25,000 retired May 1, 1927.
Dated—Feb. 1, 1923; due Feb. 1, 1938.
Interest Paid—F&A 1 at office of Trustee.
Trustee—Bank of America, New York.
Denomination—Coupon, $500 and $1,000; registerable s to principal; interchangeable.
Callable—On any interest date, upon 30 days' notice t 105 on or before Feb. 1, 1928; at 103 on or before eb. 1, 1933; at 102 on or before Feb. 1, 1937, and at 00 thereafter.
Sinking Fund—Sufficient to retire the entire issue by naturity, beginning May 1, 1925, provides for semi-anual payments each M&N 1 as follows: $25,000 from lay 1, 1925 to Nov. 1, 1927; $30,000 May 1, 1928 to ov. 1, 1930; $35,000 May 1, 1931 to Nov. 1, 1933; $40,-00 May 1, 1934 to Nov. 1, 1936, and $110,000 May 1, 937 to and including Nov. 1, 1937.
Security—First (closed) mortgage on all fixed assets of the company now owned or hereafter acquired, provided, however, that purchase money mortgages (of not to exceed 70% of the value of the property so purchased) may be assumed. Company will not pay any cash dividends which will reduce current assets to an amount less than 135% of current liabilities, including the indebtedness evidenced by the outstanding bonds, and no cash dividends will be paid except out of earnings subsequent to Feb. 1, 1923, except that dividends not exceeding $50,000 may be paid from earnings prior to said date. Value of net tangible assets will be maintained to an amount equal to not less than 200% of the bonds outstanding.
Purpose—Issued to provide additional working capital.
Quoted—In New York.
Tax Status—Pennsylvania and Connecticut 4 mills taxes and Massachusetts 6% income tax refunded. Company pays normal income tax up to 2%.
Offered—($750,000) at par in March, 1923, by John Nickerson & Co., New York.
Price Range—1926, 101-94.

Table B—Stock Records	Rate of Dividend	Athorized	Outstanding	Five Year Average Income	Dividend Requirement	Salability	Rating
R. M. Hollingshead Co. $7 cum. pref.	$7 per sh.	20,000 sh.	13,482 sh.	$319,282	$94,374	Fair	B
R. M. Hollingshead Co. common, A..	See text	275,000 sh.	275,000 sh.		See text		Text
R. M. Hollingshead Co. common, B..	"	25,000 sh.	25,000 sh.		"		Text

1. R. M. Hollingshead Co. $7 cum. preferred: Authorized, 20,000 shares; outstanding, 13,482 shares; no par. as preference as to assets and cumulative dividends of $7 per share. In liquidation, entitled to $107.50 per share nd dividends. Callable after three years from date of issue on any dividend date on 30 days' notice at $107.50 per hare. No dividends may be paid on classes A or B stock except out of net profits earned after Jan. 1, 1925, after educting preferred dividends, nor in case such payment will reduce current assets to less than twice current liabilihares but no share in addition to 13,482 shares outstanding may be issued unless earnings available for dividends or twelve consecutive calendar months within fifteen calendar months preceding equal 2 times annual dividend reuirements on all preferred outstanding and to be issued, and net tangible assets, including proceeds from sale of stock

equal $200 per share of preferred outstanding and to be issued, and further provided that no preferred in excess of 22,000 shares may be issued, except to redeem company's first mortgage bonds, unless net tangible assets including proceeds from sale of stock equal 200% of preferred taken at $100 per share) plus first mortgage bonds outstanding. Consent of two-thirds of holders of preferred required to increase authorized preferred beyond 50,000 shares; to create any stock ranking equal or prior to preferred; or to create or assume any funded debt except purchase money mortgages, unless net tangible assets equal 200% of funded debt and preferred outstanding (taken at $100 per share). Has no voting power unless 6 quarterly dividends are in default, when it has exclusive power to elect full minority of board of directors. Issued to provide for expansion of business. Initial dividend of $1.75 paid Oct. 1, 1925. Regular dividends paid quarterly, Jan. 1, etc., to stock of record, Dec. 15, etc.

Offered (12,000 shares) in June, 1925 by John Nickerson & Co., New York, at $100 per share with bonus of one share of class A common stock.

2. R. M. Hollingshead Co. class A common: Authorized, 275,000 shares; outstanding, 275,000 shares; no par. Identical in all respects with Class B common except that class A has no voting power. Initial dividend of 25 cents paid Jan. 2, 1926; April 1 and Oct. 1, 1926, 25 cents; none thereafter to Apr. 15, 1927. R. M. Hollingshead Corp. owns about 95% of this issue.

3. R. M. Hollingshead Co. class B common: Authorized, 25,000 shares; outstanding, 25,000 shares; no par. Identical in all respects with class A except that class B has sole voting rights, with restrictions (see No. 1). Initial dividend of 25 cents paid Jan. 2, 1926; April 1, 1926, 25 cents; none thereafter to Apr. 15, 1927. All owned by R. M. Hollingshead Corp.

Transfer Agent: Bank of America, New York. Registrar: Chase National Bank, New York.

NOTE: Capital stock was revised in July, 1925. Holders of former 8% non-mumulative preferred received in exchange new $7 dividend preferred. Holders of former class A common, class B common, and founders shares received in exchange new shares of R. M. Hollingshead Corp.

THE HYDRAULIC STEEL COMPANY

History: Incorporated under the laws of the State of Ohio on December 2, 1919. The duration of its charter is perpetual. The company took over the business, assets and liabilities of its predecessors, The Hydraulic Pressed Steel Company and subsidiaries of The Hydraulic Pressed Steel Company, *i. e.*, The Canton Sheet Steel Company, The Cleveland Welding & Manufacturing Company and The Hydraulic Steelcraft Company, which concerns were engaged in manufacturing hydraulically pressed steel products, etc. Company manufactures washing machine stampings, conveyor rolls, automobile stampings, and other commercial stampings; also pressed steel parts for refrigerator cars.

Receivership and Reorganization: On Oct. 26, 1923, T. P. Goodbody was appointed receiver in equity in the United States District Court, Cleveland. In June, 1926, part of a proposed reorganization plan was carried out. Cleveland Welding Co. was organized in Ohio on June 24, 1926 and acquired the West Side properties. The new company's capitalization consists of $500,000 1st mtge. 20 year 6% gold bonds and authorized capital stock of $1,500,000 preferred, par $100 and 100,000 no par common shares. All of the preferred and 45,000 shares of the common were issued to the reorganization committee, which will transfer these holdings to a new holding company. It is also proposed to sell the East Side plant for which no bids had been received up to May, 1927. Upon completion of these transactions, holding company would also own $1,500,000 7% preferred stock and 45,000 shares of no par common stock of East Side company which securities are to be deposited as collateral for new 6% secured gold notes.

Reorganization Committee: W. C. Janney, Chairman; J. H. Mason, for noteholders; C. E. Sullivan, for bank creditors; C. E. Reichenbach, for merchandise creditors; J. A. Drain, for preferred stockholders; S. G. Duncan, Sec. DEPOSITARY FOR CREDITORS: Cleveland (Ohio) Trust Co. DEPOSITARY FOR PREFERRED STOCK: Guardian Trust Co., Cleveland. GENERAL COUNSEL: Dustin, McKeehan, Merrick; Arter & Stewart.

Management: OFFICERS: J. H. Foster, Pres.; H. F. Pettee, Sec.; R. E. Hayslett, Treas., Cleveland, O. DIRECTORS: J. H. Foster, H. P. McIntosh, Sr., H. P. McIntosh, Jr., H. F. Pettee, H. B. Bole, T. P. Goodbody, A. H. Richards, W. C. Janney. ANNUAL MEETING: Fourth Friday in October. OFFICE: 6100 Hydraulic Ave., Cleveland, Ohio.

Comparative Income Account, Years Ended Oct. 31

	1926	1925	*Oct. 31, '24	June 30, '23	June 30, '22	June 30, '21
Net sales	$3,360,566	$5,062,195	$5,149,500	$6,122,230	$4,759,384	$10,481,050
Operating expenses	2,973,282	3,536,419	4,382,599	5,599,063	4,238,189	9,985,276
General expenses, taxes	193,085	1,157,595	291,855	409,921	690,531	1,486,874
Depreciation, etc.	141,927	187,409	160,545	134,134	173,976	254,369
Adjustments	.....	15,399	33,110	57,528	128,606	383,829
Net income	(d) $52,272	$165,373	$281,391	(d) $78,416	(d) $471,918	(d) $1,629,298
Interest charges	.....	.....	.....	251,174	384,356	254,604
Balance	.....	.....	.....	(d) $329,590	(d) $856,274	(d) $1,883,902
Preferred dividends	.....	.....	.....	.....	.....	294,673
Common dividends	.....	.....	.....	.....	.....	378,752
Net profit	.....	.....	.....	(d) $329,590	(d) $856,274	(d) $2,557,327

*Period Oct. 27, 1923, to Oct. 31, 1924.

Receiver's Comparative Balance Sheet, as of Oct. 31

ASSETS:	1926	1925	LIABILITIES:	1926	1925
Property and equipment	$3,668,083	$6,320,506	Preferred stock	$5,998,900	$5,998,900
Patents and rights	.....	1,060	Common stock	*1,472,592	1,472,592
Securities	.....	107,437	Bonded debt	2,851,300	2,851,300
Cash	462,081	477,645	Liability on building	.....	194,641
Notes and acceptances, rec.	10,489	50,465	Receiver's accts. pay.	65,949	.....
Accounts receivable	211,227	496,602	Receiver's accruals	86,210	.....
Inventories	398,649	823,648	Notes payable	274,558	276,958
Other assets	31,430	11,834	Accounts payable	385,674	525,911
Deferred charges	10,499	18,197	Accrued items	163,704	251,724
Deficit	6,925,115	3,617,940	Reserves	418,686	353,308
Total	$11,717,573	$11,925,334	Total	$11,717,573	$11,925,334

*Represented by 294,518 no par shares.

Bonded Debt: 1. The Hydraulic Steel Co. 8% sinking fund gold notes: Authorized, $4,000,000; outstanding, $2,851,300. Dated Nov. 1, 1920; due Nov. 1, 1930. Interest paid M&N 1, at Bankers Trust Co., New York, Trustee and at Guardian Trust Co., Cleveland, Ohio, Co-Trustee. Coupon, $100, $500 and $1,000 denominations, interchangeable, registerable as to principal only. Callable at 107½ on 30 days' notice. Annual sinking fund 2½% of maximum amount of notes issued to purchase notes at not over 107½. Issued, $3,500,000 of which $648,700 acquired and held in treasury as of Oct. 13, 1926. Direct obligation of the company. The indenture provides that no mortgage can be placed on property.

Comparative Income Account, Years Ended Dec. 31
(In Guilders)

	1925	1924	1923	1922	1921
Net income	3,508,706	3,950,432	2,740,705	2,194,143	10,754,344
Depreciation	6,292,881	6,358,358	6,369,414	5,877,390	7,542,063
Interest charges	1,694,149	1,879,165	1,882,285	570,482	.....
Miscellaneous	17,656	112	4,639	30,356	472,456
Dividends	.....	.....	.....	.....	2,726,250
Surplus	(d)4,495,980	(d)4,287,203	(d)5,515,633	(d)4,284,085	13,575

Division of Profits: After deduction of expenses, fixed charges, etc., stockholders are entitled to a dividend of 5% over the paid capital. From the balance the board of managing directors receive 12½%, the directors 2½%, the consortium 5% and stockholders 80%, of which a part at the discretion of the directors is available for the creation of a special reserve fund.

Comparative Balance Sheet, as of Dec. 31
(In Guilders)

Assets:	1925	1924	Liabilities:	1925	1924
Property and plant (net)	3,550,002	3,800,002	Capital stock	25,000,000	25,000,000
Steamships (net)	68,688,843	74,608,842	Bonded debt	30,000,000	30,000,000
Interest in other cos.	21,793,833	22,224,022	Accounts payable	3,256,036	4,708,216
Cash	1,380,232	2,162,215	Reserves	29,512,022	34,310,283
Notes and bill receivable	1,970,944	1,631,786	Miscellaneous liabilities	14,459,195	16,486,205
Accounts receivable	3,081,276	4,735,720	Undivided profits	26,701	26,701
Prepaid charges	328,552	312,552			
Miscellaneous assets	1,460,272	1,056,266			
Total	102,253,954	110,531,405	Total	102,253,954	110,531,405

Bonded Debt: 1. Holland-America Line 25-year sinking fund 6s: Authorized, 30,000,000 guilders; outstanding, 30,000,000 guilders. Dated May 1, 1922; due May 1, 1947. Interest payable M&N 1, in New York at office of White, Weld & Co., or at the offices of R. Mees & Zoonen, Rotterdamsche Bankvereeniging or Amsterdamsche Bank, all in Rotterdam, Amsterdam and the Hague Nederlandsche Administratie Trustkantoor (Netherlands Administration) and Trust Office, Amsterdam, Trustee. Bonds and coupons are payable in the Netherlands in guilders, and in New York in U. S. dollars at the official rate of exchange, i. e. the rate of exchange for sight drafts for guilders of the Kingdom of the Netherlands and gold dollars of the United States, fixed by the New York official opening on the respective days on which bonds and coupons are presented to the bankers, and failing such official quotation the average opening quotation of 2 leading banks dealing in foreign exchange at New York, selected by the bankers. Coupon 500 and 2,500 guilders. Non-callable except for sinking fund. A sinking fund is provided beginning May 1, 1927, to retire by annual drawings one-twentieth of the issue at par and interest, thus retiring the entire issue by maturity. A direct obligation of the company. There is no mortgage on existing property of the company and company agrees that none will be created while these bonds are outstanding. Proceeds used for the completion of the building of 3 passenger steamers aggregating 42,400 tons and 9 cargo steamers aggregating 98,200 tons. Listed on New York and Amsterdam Stock Exchanges. Free of all taxes of the Kingdom of the Netherlands. Company does not pay U. S. normal income tax. Rating Baa

Offered (20,000,000 guilders) in Apr., 1922 at $920 flat per 2,500 guilders by White, Weld & Co., and Blair Co., New York; balance (10,000,000 guilders) offered simultaneously in Holland by Rotterdamsche Bankvereeniging, Amsterdamsche Bank, and R. Mees & Zoonen.

Price Range:	1925	1924	1923
6s, 1947	89¾-79	84½-72	92-71

Capital Stock: 1. Holland-American Line stock: Authorized, 50,000,000 guilders; outstanding, 25,000,000 guilders. Original capitalization was 2,000,000 guilders of 1,000 guilders par value. Par reduced to 500 guilders in 1876 when a 50% reduction in capitalization was ordered. In 1881 capitalization was increased by 1,000,000 guilders, in 1890, 2,000,000 in 1899, 2,000,000 and in 1901 2,000,000. In 1902 the authorized capital was increased to 20,000,000 and in 1920 to 50,000,000. Initial dividend of 2.975% paid in 1874. Nothing was paid during 1875-1878. In 1879, 5% was paid; 1880, 5%; 1881, 10%; 1882, 9%; 1883 to 1887, none; 1888, 11%; 1889, 17%; 1890 to 1897, none. In 1898 dividends were again resumed and continued without interruption, ranging between 2½% in 1895 and 50% in 1915. In 1918, 40%; 1919, 50%; 1920, 25%; 1921, 10%; none thereafter to Dec. 31, 1925. In addition extra dividends have been paid ranging from 2 guilders in 1898 to 320.30 guilders in 1915. Rating, B

Listed on Rotterdam, Amsterdam, The Hague and Brussels Stock Exchanges.

THE R. M. HOLLINGSHEAD COMPANY

History: Incorporated under the laws of New Jersey, Dec. 31, 1897. Business established in 1890; consists of the manufacture and distribution of 98 different chemical products, chiefly for automobile and household use, such as soaps, polish, greases, enamel, leather dressing, etc., sold under the trade-name "Whiz." Plant located at Camden, N. J., contains 150,000 sq. ft. of floor space. Maintains 38 branches and 27 warehouses in the United States, Canada and Cuba.

R. H. Hollingshead Corp.: Incorporated under Delaware laws in May, 1925. Owns entire outstanding class B common stock and approximately 95% of class A common stock of The R. M. Hollingshead Co. Also owns entire common stock of The Frank Miller Co. of Camden, N. J. Latter distributes a line of products similar to those of The R. M. Hollingshead Co. but sells only to jobbers. Practically entire capital stock of R. M. Hollingshead Corp. is owned by officers and employees of The R. M. Hollingshead Co.

Management: (R. M. Hollingshead Co.) Officers: R. M. Hollingshead, Pres.; R. M. Bagley, Vice-Pres. and Sec.; C. W. Tomlinson, Treas. Directors: R. M. Hollingshead, R. M. Bagley, C. W. Tomlinson. General Auditors: Ernst & Ernst. Office: Camden, N. J.

PUBLIC UTILITY SECURITIES

Moody's Public Utility Manual, containing 2,000 pages of information and statistics, gives complete descriptive data on approximately 2,000 public service corporations of every type, with history, operating statistics, comparative income statements and balance sheets. Dividend records are shown, as well as earning power, "margin of safety," surplus, etc. About 5,500 public utility bond and stock issues are fully described and analyzed, with Moody's Ratings indicated.

The great and growing interest in public utility securities makes this volume of our Manuals unusually valuable to the investor and banker. Cost, $25.

Moody's Investors service 35 Nassau Street, New York

Comparative Income Account, Years Ended Dec. 31

	1925	1924	1923	1922	*1921	*1920
Net sales	$5,802,300	$5,744,342	$4,995,943	$3,468,852	$2,411,556	$2,547,844
Oper. expenses and deprec.	5,442,517	5,107,808	4,432,348	3,033,482	2,263,112	2,372,155
Net income	$359,783	$636,534	$563,595	$435,370	$148,444	$175,689
Margin of profit	*6.20%*	*11.08%*	*11.28%*	*12.55%*	*6.16%*	*6.90%*
Other income	17,964	23,827	14,449	9,236	6,738	1,050
Total income	$377,747	$660,361	$578,044	$444,606	$155,182	$176,739
Interest charges	83,549	99,883	72,528	28,436	30,323	20,894
Balance	$294,198	$560,478	$505,516	$416,170	$124,859	$155,845
Taxes	32,400	68,265	60,161	44,501	18,562	33,997
Other charges	13,138	12,103	6,740	.....	.....	.....
Balance for dividends	$248,660	$480,110	$438,615	$371,669	$106,297	$121,848
Preferred dividends	34,102	11,856	11,856	11,856	30,651	29,944
Common dividends	36,836	66,802	62,376	20,792		
Surplus	$177,722	$401,452	$364,383	$339,021	$75,646	$91,904
†Earned per share, preferred	$18.44	$35.61	$32.53	$27.57	$7.88	$9.04
†Earned per share, common	0.51	1.29	1.15	0.92	0.04	0.09

*Years ended Sept. 30. †Based on new capitalization.

Comparative Balance Sheet, as of Dec. 31

ASSETS:	1925	1924	LIABILITIES:	1925	1924
Property and equipment	$1,726,696	$1,084,284	Preferred stock	†$3,573,873	$148,200
Good-will, trade-marks, etc.	1	1	Common stock		1,709,650
Investments in affil. cos.	100,000	101,000	Bonded debt	950,000	1,000,000
Advances to affil. cos.	37,180	137,639	*Notes & accounts payable*	*361,441*	*580,956*
Treasury bonds	55,000	.....	*Accrued liabilities*	*37,986*	*39,644*
Cash	*339,621*	*247,613*	*Reserve for Federal taxes*	*32,400*	*68,265*
Accounts receivable	*1,648,669*	*1,479,531*	Reserve for sinking fund	58,000	23,106
Inventories	*880,273*	*843,093*	Reserve for depreciation	151,944	93,710
Other assets	224,093	234,887	Other reserves	135,232	107,495
Deferred charges	289,343	258,019	Surplus	.....	615,041
Total	$5,300,876	$4,386,067	Total	$5,300,876	$4,386,067

†Represented by 13,482 preferred, 275,000 class A and 25,000 class B no par shares.

Working Capital: *1924, current assets, $2,570,237; current liabilities, $688,865; net current assets, $1,881,372.*
1925, current assets, $2,868,563; current liabilities, $431,827; net current assets, $2,436,736.

Table A—Bond Records	Interest Payable	Maturity	Authorized
1. R. M. Hollingshead Co. 1st 7s	F&A	F. 1, 1938	$1,000,000

Outstanding	Five Year Average Income	Interest Required per Annum	Factor of Safety	Security	Salability	Rating
$895,000	$443,188	$62,650	86%	Good	Fair	Baa

1. R. M. Hollingshead Co. first sinking fund gold 7s: Dated Feb. 1, 1923; due Feb. 1, 1938. Interest paid F&A 1, at Bank of America, New York, Trustee. Coupon, $500 and $1,000; registerable as to principal; interchangeable. Callable as a whole, or in part, on any interest date, upon thirty days' notice at 105 and interest on or before Feb. 1, 1928; at 103 and interest on or before Feb. 1, 1933; at 102 and interest on or before Feb. 1, 1937, and at 100 and interest thereafter. An annual sinking fund, sufficient to retire the entire issue by maturity, becomes operative May 1, 1925, and provides for semi-annual payments each M&N 1, as follows: $25,000 from May 1, 1925 to Nov. 1, 1927; $30,000 May 1, 1928 to Nov. 1, 1930; $35,000 May 1, 1931, to Nov. 1, 1933; $40,000 May 1, 1934 to Nov. 1, 1936, and $110,000 May 1, 1937 to and including Nov. 1, 1937. Authorized, $1,000,000; outstanding, $895,000; in treasury, $55,000; retired to Dec. 31, 1925, $50,000. Secured by a first (closed) mortgage on all fixed assets of the company now owned, or hereafter acquired, provided, however, that purchase money mortgages (of not to exceed 70% of the value of the property so purchased) may be assumed. It is provided that so long as any of the bonds remain outstanding and unpaid, the company will not pay any cash dividends which will reduce current assets to an amount less than 185% of current liabilities, including the indebtedness evidenced by the outstanding bonds, and that no cash dividends will be paid except out of earnings subsequent to Feb. 1, 1923, except that dividends not exceeding $50,000 may be paid from earnings prior to said date; that it will maintain the value of the net tangible assets to an amount equal to not less than 200% of the bonds outstanding. Issued to provide additional working capital. Pennsylvania and Connecticut State taxes and Massachusetts income tax refunded. Company pays normal income tax up to 2%.

Offered ($750,000) at par in March, 1923 by John Nickerson & Co., New York.

Table B—Stock Records	Rate of Dividend	Authorized	Outstanding	Five Year Average Income	Dividend Requirement	Salability	Rating
1. R. M. Hollingshead Co. $7 cum. pref.	$7 per sh.	20,000 sh.	13,482 sh.	$329,070	$94,374	Fair	Ba
2. R. M. Hollingshead Co. common, A.	$1 per sh.	275,000 sh.	275,000 sh.	234,696	275,000	.....	Text
3. R. M. Hollingshead Co. common, B.	$1 per sh.	25,000 sh.	25,000 sh.	.....	25,000	.....	Text

1. R. M. Hollingshead Co. $7 cum. preferred: Authorized, 20,000 shares; outstanding, 13,482 shares; no par. Has preference as to assets and cumulative dividends of $7 per share. In liquidation, entitled to $107.50 per share and dividends. Callable after three years from date of issue on any dividend date on 30 days' notice at $107.50 per share. No dividends may be paid on classes A or B stock except out of net profits earned after Jan. 1, 1925, after deducting preferred dividends, nor in case such payment will reduce current assets to less than twice current liabilities or surplus to less than $21 per share of outstanding preferred. Authorized preferred may be increased to 50,000 shares but no share in addition to 13,482 shares outstanding may be issued unless earnings available for dividends for twelve consecutive calendar months within fifteen calendar months preceding equal 3 times annual dividend requirements on all preferred outstanding and to be issued, and net tangible assets, including proceeds from sale of stock equal $200 per share of preferred outstanding and to be issued, and further provided that no preferred in excess o 22,000 shares may be issued, except to redeem company's first mortgage bonds, unless net tangible assets including proceeds from sale of stock equal 200% of preferred (taken at $100 per share) plus first mortgage bonds outstanding. Consent of two-thirds of holders of preferred required to increase authorized preferred beyond 50,000 shares; to create any stock ranking equal or prior to preferred; or to create or assume any funded debt except purchase money mortgages, unless net tangible assets equal 200% of funded debt and preferred outstanding (taken at $100 per

share). Has no voting power unless 6 quarterly dividends are in default, when it has exclusive power to elect full minority of board of directors. Issued to provide for expansion of business. Initial dividend of $1.75 paid Oct. 1, 1925. Regular dividends paid quarterly, Jan. 1, etc., to stock of record, Dec. 15, etc.

Offered (12,000 shares) in June, 1925 by John Nickerson & Co., New York, at $100 per share with bonus of one share of class A common stock.

2. R. M. Hollingshead Co. class A common: Authorized, 275,000 shares; outstanding, 275,000 shares; no par. Identical in all respects with class B common except that class A has no voting power. Initial dividend of 25 cents paid Jan. 2, 1926; April 1, 1926, 25 cents. Dividends payable quarterly, Jan. 1, etc., to stock of record, Dec. 15, etc. R. M. Hollingshead Corp. owns about 95% of this issue.

3. R. M. Hollingshead Co. class B common: Authorized, 25,000 shares; outstanding, 25,000 shares; no par. Identical in all respects with class A except that class B has sole voting rights, with restrictions (see No. 1). Initial dividend of 25 cents paid Jan. 2, 1926; April 1, 1926, 25 cents. Dividends payable quarterly, Jan. 1, etc. to stock of record, Dec. 15, etc. All owned by R. M. Hollingshead Corp.

Transfer Agent: Bank of America, New York. Registrar: Chase National Bank, New York.

NOTE: Capital stock was revised in July, 1925. Holders of former 8% non-cumulative preferred received in exchange new $7 dividend preferred. Holders of former class A common, class B common, and founders shares received in exchange new shares of R. M. Hollingshead Corp.

HOLLY SUGAR CORPORATION

History: Incorporated April 4, 1916, under New York laws to acquire the stock of the Holly Sugar Co., incorporated in 1905 in Colorado. Latter company owns modern beet sugar refineries at Swink, Colorado, and Huntington Beach, California. Corporation formerly owned approximately all the capital stock of the Sheridan Sugar Co., which was dissolved in 1920 and plant and property including new refinery at Sheridan, Wyoming, conveyed to Holly Sugar Corp. In 1920, also completed new modern plant at Delta, Colo., which is in full operation. Combined slicing capacity of plants is about 8,500 tons of beets per day. Other plants at Grand Junction, Colo., Santa Ana, Calif., and Sidney, Mont.

Midland Sugar Co.: Incorporated in 1924. Owns a factory site, beet dumps and other equipment at Sidney, Mont., where a beet sugar factory was under construction in March 1925. Plant will be leased to and operated by the Holly Sugar Corp. for five years at a minimum rental sufficient to cover taxes, insurance, interest and annual principal installments on bonds. Capitalization of Midland Sugar Co. consists of $600,000 1st serial 6s and 10,000 no par shares, latter being all owned by Holly Sugar Corp.

Holly Northern Sugar Co.: Owns a factory site and had under construction, in May, 1926, a beet sugar factory at Torrington, Wyo. with beet sheds, dumps and equipment to produce 45,000,000 pounds of beet sugar per annum. Property to be leased to Holly Sugar Corp. at rental sufficient to meet all interest and maturities on bonds outstanding, taxes and repairs and all corporate charges. Company is successor to Wyoming-Nebraska Sugar Co. For bonds outstanding, see Bonded Debt No. 3. Stock all owned by Holly Sugar Corp.

Subsidiaries: Company owns the entire capital stock of the Southern California Sugar Co., Santa Ana, Cal., and in 1917 acquired 69% of the stock of the Santa Ana Sugar So., Santa Ana, Cal. In 1920 acquired a substantial interest in the Alameda Sugar Co. of Cal. In 1922 acquired the Grand Junction Sugar Co. with plant at Grand Junction, Cal. Owns 50% of the outstanding shares of Holly Oil Co. (see appended statement).

Production: (bags) years ended Dec. 31: 1922, 618,356; 1923, 1,046,217; 1924, 1,758,215; 1925, 1,887,322.

Management: OFFICERS: A. E. Carlton, Pres.; S. W. Sinsheimer, Vice-Pres.; Remsen McGinnis, Sec.; E. P. Shove, Treas. DIRECTORS: J. H. Post, New York, Spencer Penrose, E. P. Shove, S. W. Sinsheimer, A. E. Carlton, L. G. Carlton, Colorado Springs, Colo., C. G. Mitchell, Denver, Colo. GENERAL AUDITORS: Haskin & Sells. ANNUAL MEETING: First Wednesday in May in New York. OFFICE: Colorado Springs, Colo.

Comparative Consolidated Income Account, Years Ended Mar. 31

	1925	1924	1923	1922	1921	1919
Gross income	$1,709,563	$2,137,564	$774,028	(d) $620,703	Not stated	$792,943
Depreciation	507,406	480,699	478,119	312,037	.....	.....
Net earnings	$1,202,157	$1,656,865	$295,909	(d) $932,740	Not stated	$792,943
Interest, etc.	291,137	300,928	245,198	253,799	.....	.....
Taxes	70,000	.....	.....	.....	.....	.....
Other deductions	.....	383,667	.....	110,164	.....	.....
Balance	$841,020	$972,270	$50,711	(d) $1,296,703	$404,812	$792,943
Preferred dividends	462,000	173,250	.....	.....	231,000	276,500
Pref. sinking fund	.....	.....	.....	.....	399,492	91,046
Surplus	$379,020	$799,020	$50,711	(d) $1,296,703	(d) $225,680	$425,397
Earned per share, preferred	$25.49	$29.46	$1.54	.....	$12.27	$20.33
Earned per share, common	9.06	11.87	.....	.....	3.00	8.90

Surplus Account, year ended March 31, 1925: Surplus, March 31, 1924, $6,059,710; over-accrued for beets, 1923 crop, $105,848; refund federal taxes, year 1916-1917, $22,000; net operating profit, year ended March 31, 1925, before dividends, $841,020; total, $7,028,079. Deduct: Preferred dividends, $462,000; loss on agricultural advances, $165,382; reduction in contract values, $158,670; loss on notes and investments, $92,092; adjustment of book value, Santa Ana plant, $82,346; total, $960,490. Surplus March 31, 1925, $6,067,589.

Comparative Consolidated Balance Sheet, as of Mar. 31

ASSETS:	1925	1924	LIABILITIES:	1925	1924
Real estate, plant, etc.	$10,738,784	$10,419,470	Preferred stock	$3,300,000	$3,300,000
Securities owned	2,115,854	1,928,821	Common stock and surplus.	*6,067,589	6,059,710
Good-will, etc.	1,617,900	1,776,570	Minority stock of subs.	766,056	830,967
Cash	*898,659*	*1,115,789*	Bonded debt	3,373,500	3,715,500
Notes and accts. receivable.	*559,384*	*562,621*	*Bills payable*	*1,500,000*	.....
Agricultural, etc., advances	*544,924*	*503,679*	*Accounts payable*	*158,244*	*101,822*
Refined sugar	*2,939,288*	*1,848,870*	*Accrued accounts*	*483,853*	*805,011*
Materials and supplies	*591,270*	*544,155*	*Dividends payable*	*115,500*	*115,500*
Cattle and feed	*420,796*	*211,233*	Depreciation reserve	4,071,777	3,488,702
Deferred charges	521,206	600,220	Insurance reserve	80,452	63,129
			Contingent reserve	1,031,094	1,031,096
Total	$20,948,065	$19,511,437	Total	$20,948,065	$19,511,437

*Represented by 67,298 no par shares.

Working Capital: *1924, current assets, $4,786,356; current liabilities, $1,022,333; net current assets, $3,764,023. 1925, current assets, $5,954,321; current liabilities, $2,257,597; net current assets, $3,696,724.*

CONSOLIDATED STATEMENT OF WORKING CAPITAL, DECEMBER 31

	1926	1925	1924	1923	1922	1921
Current Assets—						
Accounts receivable	$112,672	$151,623	$183,927	$171,935	$311,027	$748,405
Inventories	2,838,681	2,689,027	2,739,710	2,620,785	4,032,274	3,501,279
Cash	1,308,957	233,473	497,735	265,883	213,502	33,832
Total	$4,260,310	$3,074,123	$3,421,372	$3,058,603	$4,556,803	$4,283,516
Current Liabilities—						
Accounts payable	$611,732	$662,232	$349,100	$458,175	$212,826	$207,105
Loans payable to bankers	.....	.....	1,338,210	2,060,537	2,812,553	3,883,615
Accrued charges	40,854	42,701	47,623	47,623	47,883	47,888
Reserve for income tax	.....	.....	.....	.....	398,159	.....
Total	$652,586	$704,933	$1,784,933	$2,566,335	$3,471,421	$4,138,608
Net Working Capital	$3,607,724	$2,369,190	$1,636,439	$492,268	$1,085,382	$144,908

Officers: J. T. Crabbs, Pres.; C. V. Jenkins, V-P., New York; W. H. Robinson, V-P., Granby, Que.; Charles Bocking, V-P. & Gen. Mgr., Anyox, B. C.; H. R. Plommer, Treas.; L. R. Thomas, Asst. Treas.; Vancouver, B. C.; Henry G. Lodge, Sec.; H. Harvey, Asst. Sec., New York.

Directors: J. T. Crabbs, J. B. Beaty, Berthold Hochschild, Edwin Thorne, E. P. Earle, Charles Hayden, C. V. Jenkins, A. Heckscher, H. G. Lodge, New York; W. H. Robinson, Granby, Que.; R. P. Butchard, Victoria, B. C.; Charles Bocking, Anyox, B. C.; D. C. Jackling, San Francisco, Cal.; N. L. Amster, Boston, Mass.

Head Office, Vancouver, B. C. Branch Office, 25 Broad St., New York.

THE R. M. HOLLINGSHEAD CO.

History and Property—Incorporated Dec. 31, 1897, in N. J. Co. manufactures and distributes 98 different chemical products, chiefly for automobile and household uses, such as soaps, body polishes, greases, radiator stop leaks, enamels, metal polishes, leather dressings, etc. Plant, located in Camden, N. J., comprises 255,000 sq. ft. of floor space and equipment includes complete chemical steam jacketed mixing vats of 200,000 gallons capacity. A large percentage of the output is filled by automatic filling machines into tin cans, all of which are made in the plant. The tin-can manufacturing equipment is capable of producing 250,000 cans per day, with tin lithographing facilities for printing the labels on the cans. Plant also includes a large modern printing department, equipment for making the wood boxes in which the finished products are packed and a well equipped machine shop in which all dies for the can-making machines are made, as well as many of the special machines used by the Company. Company maintains branches and warehouses at 62 strategic distributing points throughout the United States, Canada and Cuba.

R. M. Hollingshead Corporation—Incorporated May, 1925, in Delaware. Owns all of the outstanding Class "B" Common and approximately 95% of outstanding Class "A" Common of The R. M. Hollingshead Co. Also owns all the outstanding Common of The Frank Miller Co. of Camden, N. J. The latter distributes a line of products similar to those of The R. M. Hollingshead Co., but sells only to jobbers. Practically all Capital stock of R. M. Hollingshead Corporation is owned by officers and employees of The R. M. Hollingshead Co.

Capital Stock

Authorized 300,000 shares Class "A" and Class "B" Common, and 20,000 shares $7 dividend series Pfd.; outstanding 275,000 shares Class "A," 25,000 shares Class "B" and 13,482 shares $7 Pfd.; all Classes of no par value. Class "A" and "B" Common stocks are identical in all respects except that Class "A" is non-voting. All Class "B" Common and approximately 95% of Class "A" Common is owned by R. M. Hollingshead Corporation. Stock capitalization of Company was revised in July, 1925, and holders of old 8% non-cumulative Pfd. received in exchange, new $7 dividend Pfd. Holders of old Class "A" Common, Class "B" Common, and Founders shares received in exchange new shares of R. M. Hollingshead Corporation.

Preferred Stock Provisions—Has preference for assets and dividends and entitled in case of dissolution to $107.50 per share and dividends. The authorized amount of 20,000 shares may be further incre d to 50,000 shares, provided however, that no shares shall be issued in addition to 13,482 shares now outstanding unless (a) earnings available for dividends for 12 consecutive calendar months within the preceding 15 calendar months shall have been equal to 3 times the annual dividend requirements on Pfd. outstanding plus shares to be issued; (b) net tangible assets including proceeds of stock to be issued are equivalent to $200 per share of Pfd. outstanding and to be issued; (c) provided, further, no Pfd. in excess of 22,000 shares shall be issued except for redeeming Company's First Mortgage Bonds, unless net tangible assets including proceeds of stock to be issued (without deducting First Mortgage Bonds mentioned) shall be equal to 200% of value of Pfd. outstanding and to be issued, figured at $100 per share, plus principal amount of First Mortgage Bonds then outstanding. Consent of holders of 2-3 of Pfd. outstanding shall be required for authorization of Pfd. in excess of 50,000 shares, or for creation of any stock having priority over or equality with Pfd., or for creation or assumption of any funded debt except purchase money mortgages, unless net tangible assets amount to twice combined amount of all funded debt and Pfd. outstanding figured at $100 per share. No dividends may be paid on either class of Common except from net profits earned after Jan. 1, 1925, nor in case such dividends will reduce current assets to less than twice current liabilities, or surplus of Company to less than $21 per share of Pfd. outstanding. In case Pfd. dividends are in arrears to amount of $10.50 per share, Pfd. shall have exclusive right to elect a full minority of Board of Directors. Stock is subject to call as a whole or in part, after 3 years from its issue, on 30 days' notice, on any dividend date, at $107.50 a share and dividends.

Transfer Agent (Class "A" Common and Pfd.)—Bank of America, New York.

Registrar (Class "A" Common and Pfd.)—Chase National Bank, New York.

Original Offering—In June, 1925, blocks consisting of 1 share of Pfd. and 1 share Class "A" Common (12,000 shares each), at $100 per block, were offered by John Nickerson & Co., New York.

Annual Meeting—Third Monday in January.

Dividends—On Pfd. formerly outstanding, dividends regularly paid. On new $7 Pfd. initial dividend paid Oct. 1, 1925; payments since quarterly J, A, J & O 1. On Class "A" Common an initial dividend of 25 cents per share paid Jan. 2, 1926; similar quarterly payments April 1, and Oct. 1, 1926; none thereafter to June 1, 1927. On Class "B" initial dividend of 25 cents per share paid Jan. 2, 1926; April 1, 1926, 25 cents per share; none since to June 1, 1927. Stock dividends have been paid as follows: July 15, 1908, 500% ($135,000); Jan. 25, 1911, 50% ($87,500); Dec. 22, 1922, 500% ($1,309,500); July 15, 1924, 12% on Class "B" ($93,564); Dec. 24, 1924, 4% on Class "B" ($31,188).

Funded Debt

$872,000 First Mortgage Sinking Fund Gold 7s; Due February 1, 1938

Dated February 1, 1923.

Interest Payable February and August 1, at The Bank of America, New York.

Denominations—Coupon, $500 and $1,000; principal may be registered.

Trustees—The Bank of America, New York, and Howard B. Smith.

Provisions of Issue—Authorized and issued $1,000,000, of which $100,000 retired to Dec. 31, 1926. In addition to bonds outstanding, $28,000 were held in Treasury Dec. 31, 1926, of which $25,000 were to be cancelled by the May 1, 1927, installment of the sinking fund.

Callability—Subject to call as a whole or in part upon any interest date on 30 days' notice at 105 and interest to and including Feb. 1, 1928; at 103 and interest to and including Feb. 1, 1933; at 102 and interest to and including Feb. 1, 1937, and at 100 and interest thereafter.

Sinking Fund—Beginning May 1, 1925, the Company will pay to the Trustees semi-annually May and Nov. 1, an amount sufficient to retire the following principal amount of bonds: $25,000 from May 1, 1925, to and including Nov. 1, 1927; $30,000 from May 1, 1928, to and including Nov. 1, 1930; $35,000 from May 1, 1931, to and including Nov. 1, 1933; $40,000 from May 1, 1934, to and including Nov. 1, 1936, and $110,000 each, May 1, 1937, and Nov. 1, 1937. The funds so provided will be used to purchase bonds of this issue at a price not exceeding the then redemption price or to redeem bonds of this issue. The bonds thus acquired for the sinking fund shall be cancelled.

Security—A first lien on all fixed assets of Company in Camden, N. J., now owned or hereafter acquired, provided however, that purchase money mortgages (of not to exceed 70% of the value of the property so purchased) may be given. Mortgage provides that while these bonds are outstanding Company will not pay cash dividends which will reduce current assets to less than 135% of current liabilities, plus the amount of these bonds outstanding. No cash dividends beyond the amount of $50,000 may be paid except out of earnings subsequent to Feb. 1, 1923. The Company will maintain net tangible assets at not less than 200% of these bonds outstanding.

Tax Provisions—Company pays Normal Federal Income Tax up to 2%. Pennsylvania and Connecticut taxes, not exceeding four mills per annum, and Massachusetts State Income tax, not exceeding 6% per annum, refunded.

Legal Opinion—Beekman, Menken and Griscom, New York (for the Bankers), and James Collins Jones, Philadelphia (for the Company).

Original Offering—First publicly offered ($750,000) in March, 1923, at par and interest, by John Nickerson & Co., New York and St. Louis.

INCOME ACCOUNT, YEARS ENDED DECEMBER 31

The Frank Miller Co. Not Included

(Accounts Audited by Ernst & Ernst)

	1926	1925	1924	1923	1922	*1921
Net sales	$5,605,338	$5,802,300	$5,744,342	$4,995,943	$3,468,852	$2,411,556
Operating expenses, etc.	5,460,757	5,442,517	5,107,808	4,432,348	3,033,482	2,263,112
Net earnings	$144,581	$359,783	$636,534	$563,595	$435,370	$148,444
Other income	11,087	17,964	23,827	14,449	9,236	6,738
Total income	$155,668	$377,747	$660,361	$578,044	$444,606	$155,182
Deduct:						
Interest	$87,566	$83,549	$99,883	$72,528	$28,436	$30,323
Federal taxes	1,400	32,400	68,265	60,161	44,501	18,562
Other charges	9,347	13,138	12,103	6,740	.....	.....
Net income	$57,355	$248,660	$480,110	$438,615	$371,669	$106,297
Preferred dividends	94,374	34,102	11,856	11,856	11,856	9,859
Common dividends (cash)	218,750	36,836	66,208	62,376	20,792	20,792
Surplus for year	†$255,769	$177,722	$401,452	$364,383	$339,021	$75,646
‡Earnings Per Share—						
Preferred	$4.25	$18.44	$35.61	$32.53	$27.57	$7.88
Common	Nil	0.51	1.29	1.15	0.92	0.40

*Years ended Sept. 30. †Deficit. ‡Figured on basis of present capitalization.

GENERAL BALANCE SHEET, DECEMBER 31

(Accounts Audited by Ernst & Ernst)

Assets—	1926	1925	1924	1923	1922	*1921
Plant, property and equipment	$2,130,199	$1,726,696	$1,084,285	$1,006,186	$856,920	$399,587
Good will, trade marks, etc.	1	1	1	1	1	247,890
Investments in affiliated cos.	100,000	100,000	101,000	101,000	100,000	15,000
Advances to affiliated cos.	7,726	37,180	137,639	121,430	2,990	5,209
Cash in escrow	.....	.....	152,625	.....	.....	.....
Treasury bonds	28,000	55,000	.....	.....	.....	.....
Other assets	225,801	224,093	82,262	55,585	33,837	12,671
Cash	209,935	339,621	247,613	247,143	168,967	116,474
Accounts receivable	1,701,903	1,648,669	1,479,531	1,174,747	921,984	732,310
Inventories	1,134,616	880,273	843,092	622,675	465,501	290,033
Cash value life insurance	41,900	.....	.....	.....	.....	.....
Deferred charges	210,559	289,343	258,019	206,614	26,994	17,609
Total	$5,790,639	$5,300,876	$4,386,067	$3,535,381	$2,577,194	$1,836,783
Liabiltities—						
Common stock	$2,885,250	$2,885,250	$1,709,650	$1,577,950	$1,569,400	$259,900
Preferred stock			148,200	148,200	148,200	148,200
Funded debt	‡900,000	‡950,000	1,000,000	750,000	.....	.....
Mortgages payable	.....	.....	.....	.....	10,000	10,000
Notes and accounts payable	917,037	361,441	580,956	398,857	591,550	397,139
Accts. with affil. cos.	81,291	.....	.....	.....	.....	.....
Accrued liabilities	45,406	37,986	39,644	39,851	9,666	7,351
Reserve for Federal Taxes	1,400	32,400	68,265	58,721	44,501	18,562
Reserve for sinking fund	108,000	58,000	23,106	.....	.....	.....
Reserve for doubtful accounts	195,746	135,232	107,495	94,324	77,559	23,628
Reserve for depreciation	220,496	151,944	93,710	45,634	.....	144,699
Surplus	436,013	688,623	651,041	421,844	126,318	827,304
Total	$5,790,639	$5,300,876	$4,386,067	$3,535,381	$2,577,194	$1,836,783

*Sept. 30. ‡Includes $25,000 to be retired by sinking fund on May 1.

STATEMENT OF WORKING CAPITAL, DECEMBER 31

	1926	1925	1924	1923	1922	*1921
Current Assets—						
Cash	$209,936	$339,621	$247,613	$247,143	$168,967	$116,474
Accounts receivable (net)	1,506,157	1,513,437	1,372,036	1,080,423	844,425	708,682
Inventories	1,134,616	880,273	843,092	622,675	465,501	290,033
Cash value line ins.	41,900	.....	.....	.....	.....	.....
Total	$2,892,608	$2,733,331	$2,462,741	$1,950,241	$1,478,893	$1,115,189
Current Liabilities—						
Notes and accounts payable	$917,037	$361,441	$580,956	$398,857	$591,550	$397,139
Accrued liabilities	45,406	37,986	39,644	39,851	9,666	7,351
Reserve for Federal Taxes	1,400	32,400	68,265	58,721	44,501	18,562
Accounts with affil. cos.	81,291	.....	.....	.....	.....	.....
Total	$1,045,134	$431,827	$688,865	$497,429	$645,717	$423,052
Net Working Capital	$1,847,475	$2,301,504	$1,773,876	$1,452,812	$833,176	$692,137

*Sept. 30.

Officers and Directors: R. M. Hollingshead, Pres.; R. M. Bagley, V-P. & Sec.; C. W. Tomlinson, Treas. General Office, Camden, N. J.

THE JOHN DOUGLAS COMPANY

History and Property—Incorporated in 1890, in Ohio. Manufactures of sanitary plumbing fixtures. Has installed its fixtures in many public buildings, including the Department of Interior and the Bureau of Engravings Building at Washington, D. C., and in the Panama Canal Buildings. Company is the owner of a number of valuable patents. Plant at Cincinnati, O.

Capital Stock

Authorized, 350,000 Common and $500,000 7% cumulative Pfd.; outstanding, $350,000 Common and $298,900 Pfd.; par, $100. Common stock is all owned by interests identified with the management.

Preferred Stock Provisions—No mortgage indebtedness can be incurred nor can any other stock be issued having priority

DEFENDANT'S COUPLER IN SUIT

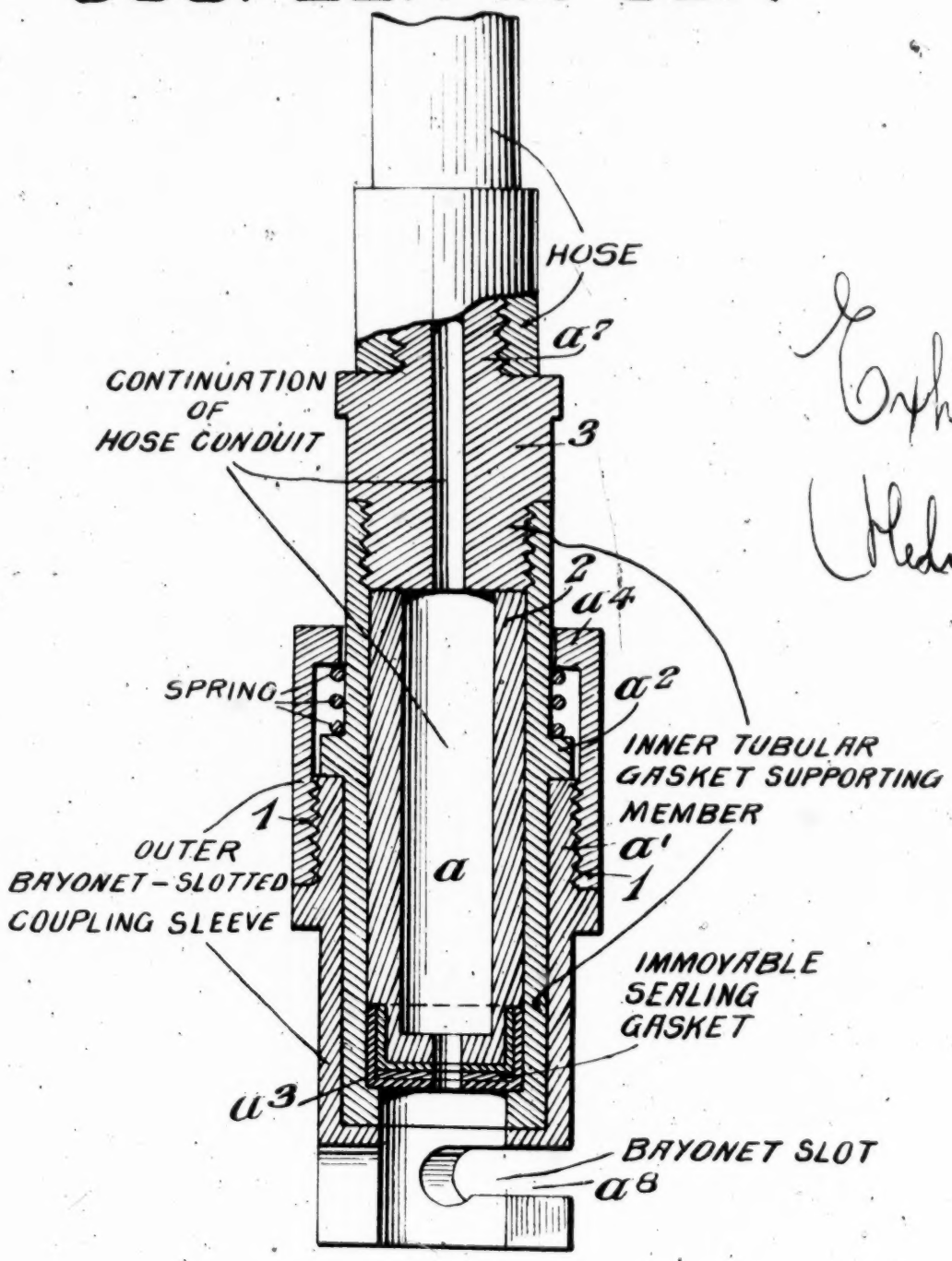

Exhibit "K"
Medong affidavit

366

Spurious Coupler

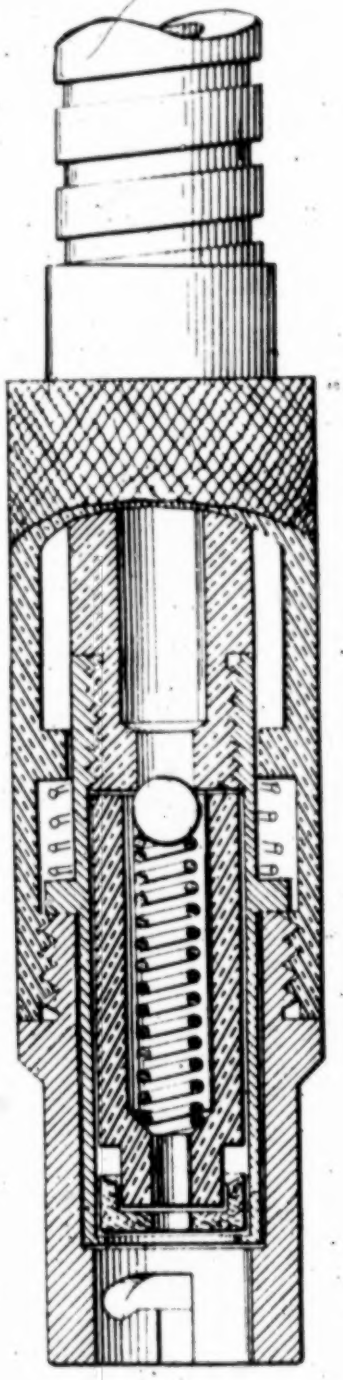

753

[fol. 367] PLAINTIFF'S EXHIBIT 4

390

Department of Commerce, United States Patent Office

To all persons to whom these presents shall come, Greeting:

This is to certify that the annexed is a true copy from the records of this office of Disclaimer, filed August 29, 1927, in the matter of the Letters Patent of Arthur V. Gullborg, Number 1,307,734, granted June 24, 1919, for Improvement in Lubricating Means.

In testimony whereof I have hereunto set my hand and caused the seal of the Patent Office to be affixed, at the City of Washington, this thirtieth day of September in the year of our Lord, one thousand nine hundred and twenty seven and of the Independence of the United States of America the one hundred and fifty-second.

Thomas E. Robertson, Commissioner of Patents.

(Seal.) Attest: D. E. Wilson, Chief of Division.

Mail Room, Aug. 29, 1927. U. S. Patent Office. C. C. U. S. Patent Office.

DISCLAIMER

Under Section 4917 U. S. Rev. Stats.

Williams, Bradbury, McCaleb & Hinkle

To the Commissioner of Patents:

Your petitioner, The Bassick Manufacturing Company, a corporation organized and existing under and by virtue of the laws of the State of Delaware and having its principal place of business at 2650 North Crawford Avenue, [fol. 368] in Chicago, the County of Cook, and State of Illinois, represents that in the matter of a certain improvement in Lubricating Means, for which Letters patent of the United States No. 1,307,734 were granted to one Arthur V. Gullborg, on the 24th day of June, 1919, it is the assignee of the entire right, title and interest in and to said Letters

Patent and the inventions disclosed therein, as evidenced by the following assignments:

Assignment from Arthur V. Gullborg to the Alemite Die-Casting & Mfg. Co. Recorded on the 10th day of March, 1920 in Liber T 109, page 402 of Transfers of Patents.

Assignment from Alemite Die-Casting & Mfg. Co. to John S. Gullborg an undivided eighty/three hundred ninety-fifths (80/395) interest, to C. M. Hedman, an undivided seventy-five/three hundred ninety-fifths (75/395) interest, to H. R. Hedman, an undivided seventy-five/three hundred ninety-fifths (75/395) interest, to A. V. Gullborg an undivided five/three hundred ninety-fifths (5/395) interest, to F. E. Johnson an undivided ten/three hundred ninety-fifths (10/395) interest, and to D. F. Fesler an undivided one hundred fifty/three hundred ninety-fifths (150/395) interest in said patent. Recorded on the 10th day of March, 1920 in Liber T 109, page 403 of Transfers of Patents.

Assignment by John S. Gullborg an undivided eighty/three hundred ninety-fifths (80/395) interest, by C. M. Hedman an undivided seventy-five/three hundred ninety-fifths (75/395) interest, by H. R. Hedman an undivided seventy-five/three hundred ninety-fifths (75/395) interest, by A. V. Gullborg an undivided five/three hundred ninety-fifths (5/395) interest, by F. E. Johnson an undivided ten/three hundred ninety-fifths (10/395) interest, and by D. F. Fesler an undivided one hundred fifty/three hundred ninety-fifths interest in said patent to The Bassick Company. Recorded on the 10th day of March, 1920 in Liber T 109, page 406 of Transfers of Patents.

Assignment from The Bassick Company to The Bassick Manufacturing Company of the entire right, title and interest in and to said patent. Recorded on the 19th day of April, 1920 in Liber Q 110, page 55 of Transfers of Patents.

That it has reason to believe that through inadvertence, without any fraudulent or deceptive intention, the specifi- [fol. 369] cation and claim of said Letters Patent are too broad, including that of which said patentee was not the first inventor. Your petitioner, therefore, hereby enters this disclaimer to that part of the claims in said specification which is in the following words, to wit:

"12. The combination with a bearing provided with a member for receiving lubricant, of means for supplying

lubricant thereto comprising a hollow member, means for supplying lubricant to said hollow member under pressure, means for detachably connecting said members, means for sealing said connection comprising a gasket positioned between said members and held against one of said members by the pressure of the lubricant, and a spring for initially positioned said gasket against said member."

Signed at Chicago, in the County of Cook, and State of Illinois, this 26th day of August, 1927.

The Bassick Manufacturing Company, J. E. Otis, Jr., Vice President. Attest: T. T. Smerrian, Asst. Secretary.

AFFIDAVIT OF ERNEST W. DAVIS

STATE OF ILLINOIS,
County of Cook, ss:

Ernest W. Davis, being first duly sworn, deposes and says:

I am the Ernest W. Davis who signed an affidavit of even date for use in this cause, and I am familiar with the record and proceedings herein.

I have examined the lubricant compressor and equipment furnished therewith by the defendant, The R. M. Hollingshead Company, as referred to in the affidavit of D. A. Beezley, which I understand he procured on April 7, 1926.

The lubricant compressor is marked "Whiz High Pressure Chassis Lubricant The R. M. Hollingshead Co. Camden, N. J., U. S. A." This device is adapted to receive lubricant and discharge the same under pressure through [fol. 370] the flexible conduit which is adapted to be secured to a discharge pipe on the compressor. At the free end of the conduit is provided a metal hose having thereon a swivel type coupling of the type illustrated in the accompanying drawing marked "Exhibit J". The coupling is adapted to be used in conjunction with pin type fittings known as "Alemite" and made by The Bassick Manufacturing Company, the plaintiff herein, and it comprises a barrel or sleeve 101 housing a flexible cup leather 102 normally resting against an annular shoulder 103. The

barrel or sleeve 101 is flanged outwardly at its outer end to provide abutments for the ringlike members 104 and 105, member 105 being flanged inwardly at its outer end and provided with keyhole slots for the reception of the ends of a pin forming a part of a pin fitting. The inner face of the flange on member 105 is provided with a pair of grooves or depressions 106 disposed at right angles to the keyhole slots. A booster pump is disposed between the admission and discharge ends of the metal hose for the purpose of increasing the pressure on the lubricant being furnished to a bearing.

I have also examined the affidavit of O. A. Cumming and the exhibits submitted therewith, and I have had prepared and submit herewith as "Exhibit K" a drawing disclosing the construction of the compressor and Alemite type coupling sold to him. The lubricant compressor furnished to Mr. Cumming and illustrated in Fig. 1 of "Exhibit K" consists of a barrel closing at both ends by means of caps, one of which provides a bearing for a piston stem having a piston at its inner end and a handle at its outer end. The cap at the discharge end of the compressor contains a cylinder and supports a handle to operate a piston by means of which pressure may be placed upon lubricant entering the cylinder from the compressor barrel. The lubricant is forced outwardly past a check valve into the flexible conduit shown in Fig. 2, which is screwed into the cap on the discharge end of the compressor. A swivel coupling is attached to the free end of the flexible conduit and Fig. 3 is an enlarged sectional drawing of this device. It comprises a sleeve 110 having a pair of bayonet slots at its outer end for the reception of the ends of a pin forming a part of a pin fitting. The sleeve 110 rotates about an inner sleeve 111 in co-operation with a cap 112. A flexible cup leather 113 supported by means of a metallic disc and cup is slidably housed within the sleeve 111, the outward movement of the cup leather being limited by an annular shoulder 114 within the bore of the sleeve 111. A slidable piston 115 is pro-
[fols. 371 & 372] vided to operate against the cup leather 113.

While the devices sold to Messrs. Beezley and Cumming are not the product of The Bassick Manufacturing Company, they are adapted for use in conjunction with the

plaintiff's "Alemite" lubricating equipment, and the fact is also that interchangeable use is possible with the lubricating equipment referred to in my affidavit of even date as having been held to have infringed Gullborg patent 1,307,734.

Ernest W. Davis.

Subscribed and sworn to before me this 21st day of October, 1926.

Hattie R. Schooler, Notary Public. (Seal.)

(Here follow 2 drawings, Plaintiff's Exhibit 15, side folios 373 and 374.)

PLAINTIFF'S EXHIBIT 15

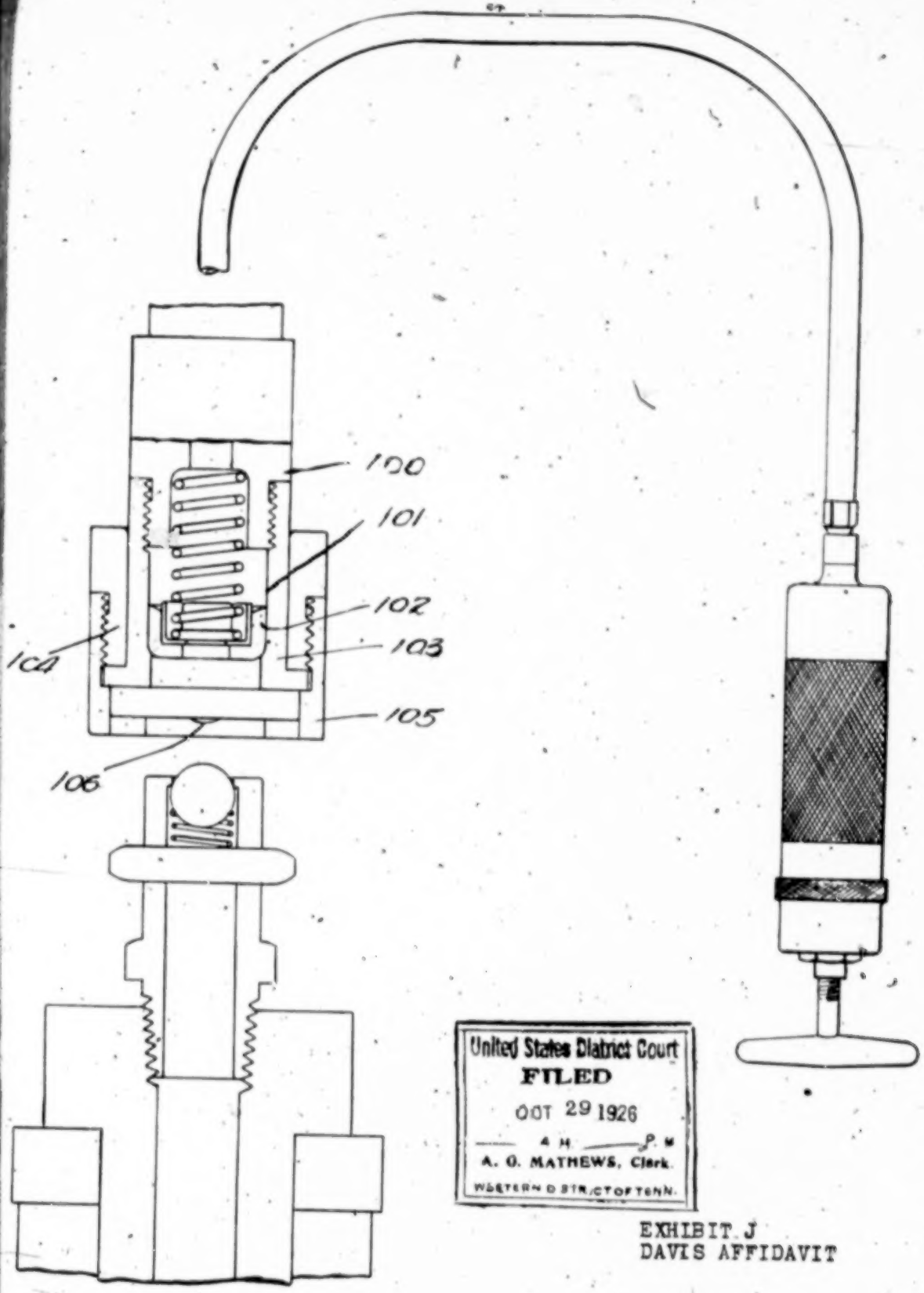

United States District Court
FILED
OCT 29 1926
A. M. P. M.
A. G. MATHEWS, Clerk.
WESTERN D STR. CT OF TENN.

EXHIBIT J
DAVIS AFFIDAVIT

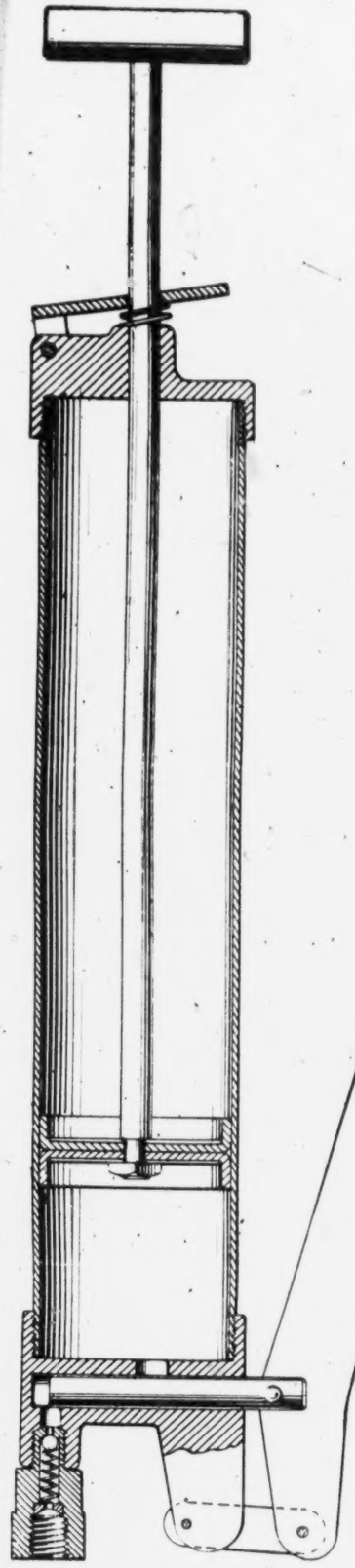

Fig. 1.

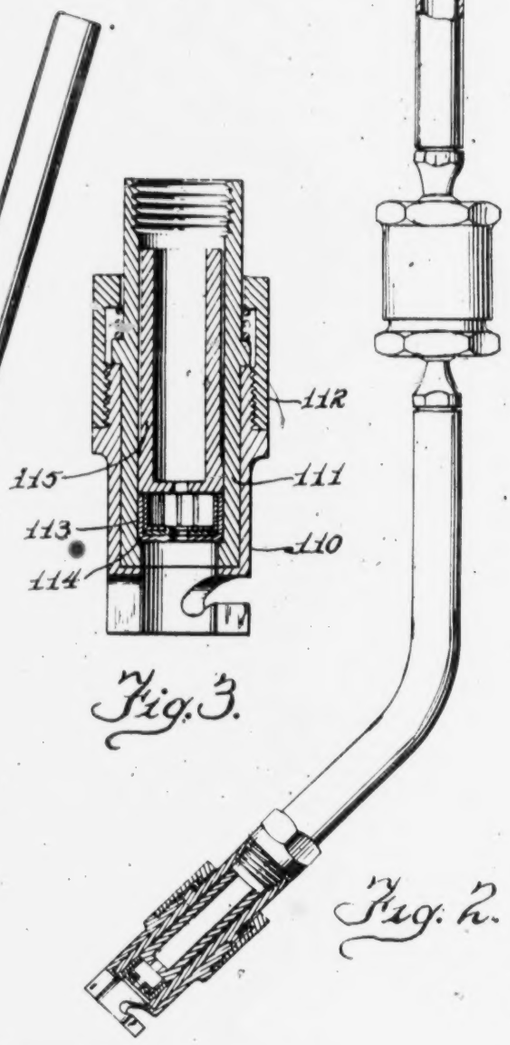

Fig. 2.

Fig. 3.

United States District Court
FILED
OCT 29 1926
A. M. P. M.
A. G. MATHEWS, Clerk.
WESTERN DISTRICT OF TENN.

PLAINTIFF'S EXHIBIT 16.

Exhibit K.
Davis Affidavit

[fol. 375] PLAINTIFF'S EXHIBIT 20

UNITED STATES DISTRICT COURT, DISTRICT OF NEW JERSEY

Equity. No. 2759

THE BASSICK MANUFACTURING COMPANY, Plaintiff,

vs.

THE FRANK MILLER COMPANY, Defendant

NOTICE—Filed June 23, 1928

Messrs. Wiedersheim & Fairbanks, Thirteenth & Chestnut Streets, Philadelphia, Pa.

GENTLEMEN:

Please take notice that on Monday, May 21, 1928, at 10.00 o'clock A. M., or as soon thereafter as counsel can be heard, we shall appear before his Honor, Judge Joseph L. Bodine, in the court room usually occupied by him at Newark, New Jersey, and present plaintiff's Motion for the entry of an Order herein, a copy of the Motion being handed to you herewith.

Plaintiff's Motion is based upon the record and proceedings herein, and the record and proceedings in the case of The Bassick Manufacturing Company against The R. M. Hollingshead Company, Equity No. 935, in the United States District Court for the Western District of Tennessee, Western Division, in which you are also counsel for the defendant.

Williams, Bradbury, McCaleb & Hinkle, Solicitors and Counsel for Plaintiff.

Service of the foregoing notice and a copy of Plaintiff's Motion acknowledged this 12th day of May, 1928.

Leonard L. Kalish, Solicitors and Counsel for Defendant.

Certified copy.

UNITED STATES OF AMERICA,
For the District of New Jersey, ss:

I, George T. Cranmer, Clerk of the United States District Court in and for the — District of New Jersey, do

hereby certify that the annexed and foregoing is a true [fol. 376] and full copy of the original Notice now remaining among the records of the said Court in my office.

In testimony whereof I have hereunto subscribed my name and affixed the seal of the aforesaid Court at Trenton this 1st day of June, A. D. 1928.

George T. Crammer, Clerk, by Charles S. Chevrier, Deputy Clerk. (Seal.)

PLAINTIFF'S EXHIBIT 20

UNITED STATES DISTRICT COURT, DISTRICT OF NEW JERSEY

Equity. No. 2759

THE BASSICK MANUFACTURING COMPANY, Plaintiff,

vs.

THE FRANK MILLER COMPANY, Defendant

MOTION—Filed June 23, 1928

Now comes The Bassick Manufacturing Company, by its Solicitors and Counsel, and moves for the entry of an Order explaining and supplementing the Order entered herein on February 28, 1928, by adding at the end thereof the following:

"But the Court not having decided the merits of any question in issue, this Order shall not prejudice the right of the plaintiff to prosecute its suit or claims against the R. M. Hollingshead Company."

This motion is based upon the record and proceedings herein, and the record and proceedings in the case of The Bassick Manufacturing Company against The R. M. Hollingshead Company filed on or about August 17, 1926, and pending in the United States District Court for the Western District of Tennessee, Western Division.

(Signed) Williams, Bradbury, McCaleb & Hinkle, Solicitors and Counsel for Plaintiff.

Certified copy.

[fol. 377] UNITED STATES OF AMERICA,
For the District of New Jersey, ss:

I, George T. Cranmer, Clerk of the United States District Court in and for the — District of New Jersey, do hereby certify that the annexed and foregoing is a true and full copy of the original Motion now remaining among the records of the said Court in my office.

In testimony whereof I have hereunto subscribed my name and affixed the seal of the aforesaid Court at Trenton this 29th day of May, A. D. 1928.

George T. Cranmer, Clerk, by Charles S. Chevrier, Deputy Clerk. (Seal.)

UNITED STATES DISTRICT COURT, DISTRICT OF NEW JERSEY

Equity. No. 2759

THE BASSICK MANUFACTURING COMPANY, Plaintiff,

vs.

THE FRANK MILLER COMPANY, Defendant

On the 28th day of February, 1928, an application was made by the plaintiff to dismiss its bill of complaint in the above matter without prejudice. At the time I entered the order of dismissal I apprehended that it was the right of the plaintiff to dismiss its bill before decision, upon payment of costs. Such has been the practice of this court and the courts of the State of New Jersey for many years. Hence the order was signed.

I did not apprehend at the time the order of dismissal was signed that it might be regarded as res judicata.

I am suggesting to counsel that an appeal be taken from the order of dismissal to the end that they may bring before the Circuit Court of Appeals for the Third Circuit the circumstance that I did not think that the order could be given the effect of a determination of the cause upon the merits, but that I thought that the order was merely a dismissal which the plaintiff was entitled to at any time before the case was closed.

(Signed) J. L. Bodine, United States District Judge.

[fol. 378] I hereby — that the foregoing is a true copy of the original on file in my office.

George T. Cranmer, Clerk, per Chas. E. Joeckel, Deputy. (Seal.)

UNITED STATES DISTRICT COURT, DISTRICT OF NEW JERSEY

Equity. No. 2759

THE BASSICK MANUFACTURING COMPANY, Plaintiff,

vs.

THE FRANK MILLER COMPANY, Defendant

The plaintiff considering itself aggrieved by the order entered herein on February 28, 1928, dismissing the bill of complaint herein, does hereby appeal to the United States Circuit Court of Appeals for the Third Circuit for the reasons specified in the assignments of error filed herewith, and prays that this appeal may be allowed and a citation may be granted directed to the above named defendant commanding it to appear before the said United States Circuit Court of Appeals to do and to receive what may appertain to justice to be done in the premises, and that a transcript duly authenticated with so much of the record, proceedings and exhibits herein as appertains to the subject matter of the appeal be transmitted with this appeal to the said United States Circuit Court of Appeals.

(Sgd.) Lynn A. Williams, Solicitor & Counsel for Plaintiff.

The foregoing appeal is allowed as prayed for and the Clerk of this Court is directed to issue a citation to the said defendant and to certify the record accordingly.

(Sgd.) J. L. Bodine, U. S. District Judge.

May 22, 1928.

I hereby certify that the foregoing is a true copy of the original on file in my office.

George T. Cranmer, Clerk, per Chas E. Joeckel, Deputy. (Seal.)

[fol. 379] UNITED STATES DISTRICT COURT, DISTRICT OF NEW JERSEY

Equity. No. 2759

THE BASSICK MANUFACTURING COMPANY, Plaintiff,

vs.

THE FRANK MILLER COMPANY, Defendant

ASSIGNMENT OF ERRORS—Filed June 23, 1928

Now comes the above named plaintiff by its solicitor and counsel and presents with his accompanying petition for appeal from the order entered herein on February 28, 1928, dismissing the bill of complaint herein the following assignments of error:

1. The Court erred in entering the said order of dismissal on February 28, 1928.

2. The Court erred in not entering an order upon the plaintiff's motion "That the above entitled cause be dismissed without prejudice with the taxable costs to the defendant to be taxed by the court."

3. The Court erred in omitting the words "without prejudice" or words indicative of the right of the plaintiff to prosecute its suit against the R. M. Hollingshead Company in the United States District Court for the Western District of Tennessee from its order of dismissal on February 28, 1928.

If the order of February 28, 1928, be construed as a final decree upon the merits then the following are also assigned.

That the Court erred in dismissing the bill of complaint.

5. That the Court erred in not holding that the plaintiff is the owner of all the right title and interest to and under the patents in suit.

6. That the Court erred in not holding the patents in suit valid and infringed by the defendant.

7. That the Court erred in not ordering an accounting for damages, and profits as prayed for in the bill of complaint.

8. If the order of February 28, 1928, be construed as a holding that the patents in suit are invalid and/or not infringed and/or that the plaintiff is not the owner of all the right title and interests in, to and under the same, then the Court erred in so holding.

(Sgd.) Lynn A. Williams, by Henry R. Casleton, Counsel and Solicitor for Plaintiff. (Seal.)

[fol. 380] I hereby certify that the foregoing is a true copy of the original on file in my office.

George T. Cranmer, Clerk; Chas. E. Jaeckel, Deputy.

(Cover)

UNITED STATES DISTRICT COURT, DISTRICT OF NEW JERSEY

BASSICK MANUFACTURING CO., Plaintiff,

v.

FRANK MILLER COMPANY, Defendant

On motion before Hon. Joseph L. Bodine, May 21, 1928

Marion H. Sweetman, Court Reporter, Trenton, N. J. P. O. Box 318.

UNITED STATES DISTRICT COURT, DISTRICT OF NEW JERSEY

BASSICK MANUFACTURING CO., Plaintiff,

v.

FRANK MILLER COMPANY, Defendant

On motion made before Hon. Joseph L. Bodine, at Newark. N. J., May 21, 1928, to dismiss decree entered.

Appearances:

Lynn A. Williams, Esq., Henry R. Ashton, Esq., for the Plaintff.

Charles M. Burch, Esq., E. Hayward Fairbank, Esq., Leon L. Kalish, Esq., Charles F. Lynch, Esq., William C. Jones, Esq., for the Defendant.

[fol. 381] Mr. Williams: I represent the Bassick Manufacturing Company the plaintiff in this patent infringement suit.

In this motion, the effect of which is, I believe, to correct by an explanation or a supplement an error or inadvertence in the entry of a decree of dismissal on February 28, 1928. Very briefly the facts are these: The Bassick Manufacturing Company learned in the summer of 1926 that the R. M. Hollingshead Company, through its branch in Memphis, was selling some lubricating equipment which we believe to be an infringement of the Bassick Manufacturing Company's patent covering its Alemite lubricating equipment. Suit was commenced in September, 1926, at Memphis against the Hollingshead Company, and a motion for preliminary injunction was made. Judge Anderson held the motion for preliminary injunction for several weeks until the Court of Appeals for the Sixth Circuit handed down an opinion in other suits involving the same patent. That opinion having been rendered, Judge Anderson on March 21, 1927, entered an order for a preliminary injunction restraining the Hollingshead Company. On behalf of the Bassick Company, we sent letters to some seven hundred jobbers throughout the country enclosing copies of the opinion and mandate and orders of the Sixth Circuit Court of Appeals, and advising them that their handling of equipment made by various manufacturers was, in our opinion, an infringement. One of these manufacturers complained to the court in Delaware that we were interferring improperly with their trade by the sending out of these notices.

We had not commenced suits against all of these manufacturers of what we regarded as this infringing equipment.

As soon as this one concern presented its motion to restrain us from sending out these letters, because we had not commenced suit, as we conceived it, we immediately endeavored to show our good faith by bringing suits against all of several manufacturers throughout the country who had been selling equipment in infringement of these patents. One of the concerns against whom we commenced suit at that time, in July, I think it was of 1927, was the Frank Miller Company, of Camden, whom we had been advised had been engaged in the sale of some lubricating equipment and contributory infringement of

these patents. In that suit we made a motion for a preliminary injunction, which was argued before your Honor in November of 1927, and your Honor suggested that the [fol. 382] argument take the form of final hearing, which was agreed to, with leave to both sides to file some additional affidavits, exhibits and one thing or another.

In the middle of February 1928, Mr. Bagley, vice-president of the Hollingshead Company, in conferring with Mr. Otis, vice-president and head of the Bassick Company, told Mr. Otis that the Frank Miller Company was a subsidiary of the Hollingshead Company. A few days later, on returning to my office I found a letter from Mr. Otis saying that Mr. Bagley had so advised him. Upon further investigating the matter, I concluded that the Frank Miller Company was identical to all legal intents and purposes with the Hollingshead Company. That meant that we had an injunction in the Hollingshead suit under which the Frank Miller Company was bound not to sell the lubricating equipment, which it had formerly sold.

The papers on the motion for preliminary injunction showed what did not mean as much to us at that time as it subsequently came to mean, that about the first of April 1927 the Frank Miller Company had discontinued the sale of the lubricating equipment of which we complained. Judge Anderson's injunction in the Hollingshead case was ordered on March 21st, which meant that the Miller Company had almost immediately following that injunction discontinued its sale of this equipment. When we learned that there was this identity or close privity between these parties we prepared a motion to dismiss our suit against the Frank Miller Company without prejudice, and in support of that motion Mr. Ahlberg, one of my associates, presented to your Honor the affidavits showing in more detail the facts which I have briefly stated. That motion was resisted by the Frank Miller Company, who contended that there was not an identity of parties. They contended the facts to be something like this: That the R. M. Hollingshead Company, of New Jersey, the voting stock of that company was owned by the R. M. Hollingshead Company, a Delaware corporation, and that the voting stock of the Frank Miller Company was also owned by the R. M. Hollingshead Company the Delaware corporation, and that the stock of the Delaware Hollingshead Company was in turn

owned by the officers of the R. M. Hollingshead Company, the New Jersey corporation.

Whether those be precisely the facts, and I have no reason to doubt that as set up by these people, we were satisfied that there was such identity and privity between the two. We thought that it would be a violation of the injunc- [fol. 383] tion of the court of the Western District of Tennessee to believe that the adjudication which should be had in that suit would be conclusive upon the Frank Miller Company as well as the Hollingshead Company, because of what we conceived to be this identity between them. At the hearing of our motion to dismiss the suit against the Miller Company, there were representations made on behalf of counsel for that defendant, who are the same counsel as for the Hollingshead Company in Tennessee, that the Frank Miller Company had spent much money and effort in preparing for the trial of the Frank Miller suit.

Your Honor on February 28th, when this matter was heard, entered an order of dismissal, from which was struck out these two words "without prejudice." The Hollingshead case in Tennessee was set for trial at final hearing before Judge Anderson on April 25th. I went to Memphis the previous day and there learned that two or three days prior thereto motion had been made to Judge Anderson for leave on the part of the Hollingshead Company to file an amendment to its answer, and that amendment recited or alleged that there was res judicata or an estoppel by judgment resulting from the order which had been entered in this case, on February 28th. That answer says in part:

"Defendant further answering avers as a separate and distinct defense that the matters and things complained of herein are now res judicata by reason of the final decree entered by his Honor Joseph L. Bodine on February 28th, 1928, in a case entitled 'The United States District Court, District of New Jersey, Bassick Manufacturing Company v. The Frank Miller Company, Equity No. 2759.'

"a. Wherein as shown by the Bill of Complaint, which is a substantial duplicate of the bill of complaint herein, the cause of action is identical with the cause of action herein, to wit—as shown by the record.

"(b) Wherein as shown by the record, particularly the affidavits of J. E. Otis, Jr. and Elwood Hansmann, on behalf of plaintiff"—those were the parties who made affidavits in support of our motion here—"the issues of infringment involved are the same as the issues of infringement herein.

"(c) Wherein the plaintiff has shown by its record particularly the affidavit of J. E. Otis, Jr., filed on behalf of plaintiff, that the plaintiff is identically the same as the plaintiff herein and that the defendant, the Frank Miller Company, is in privity with the defendant—the Hollingshead Company herein.

[fol. 384] "(c) Wherein the quality of the parties litigant is identical with the qualities of the parties litigant herein, and

"(d) Wherein the pleadings and proofs are the same as the pleadings and proofs herein.

"Defendant further answering avers that in the above entitled cause, the Bassick Manufacturing Company v. Frank Miller Company, Judge Bodine expressly denied plaintiff a decree of dismissal qualified by the terms 'without prejudice' and ordered said words 'without prejudice' stricken from the decree, so that said decree of dismissal in said Frank Miller suit, as finally entered by the District of New Jersey read as follows:

'This cause having come on to be heard before the court upon plaintiff's motion to dismiss, the same having been argued by counsel, and the court being fully advised in the premises, it is Ordered that the above entitled cause be dismissed [without prejudice]* with the taxable costs to the defendant, to be taxed by the clerk.

J. L. Bodine, U. S. District Judge.'

"The said decree of dismissal is a final decree on the merits and conclusive as to matters specifically disposed of thereby, and also of all other matters which might have been disposed of in said suit at plaintiff's option."

When the case in Tennessee was called for trial, there was an opening statement and motion to segregate this is-

---

[* Words enclosed in brackets erased in copy.]

sue of res adjudicata and Mr. Burch on behalf of the defendant made the opening argument in which he argued that there was this res judicata. He made an effective argument. I am frank to concede there was force in it. That court did not there decide the issue, but adjourned the trial to be continued today. Eight days ago we served upon counsel for the Miller Company, the counsel for the Hollingshead Company there being the same, our motion for order explaining and supplementing the decree of February 28th by the addition of the following words:

"That the court not having decided the merits of any question in issue this order shall not prejudice the right of plaintiff to prosecute its suit or claims against the R. M. Hollingshead Company."

The reason for this motion for this correction of this error, or inadvertence, in the order of February 28th is because I understood it to have been the statement of the court, and the understanding at least of the plaintiff's [fol. 385] representatives at that time, that that was not a decision upon the merits and was not infringement between these parties.

I have here an excerpt from the United States Supreme Court case in re Skinner, 265 U. S., which I think is conclusive authority to the effect that the plaintiff had an absolute right to discontinue the Frank Miller suit voluntarily, or to have it dismissed on its own motion as was done, providing the case had not reached the stage or was not of such a character that the defendant had a right to affirmative relief upon some counterclaim or cross bill for example.

The Court: All that remained to be done in this case was for me to receive the briefs.

Mr. Williams: That is true.

The Court: That plaintiff's case was in and the defendant's case was in.

Mr. Williams: I am willing to concede that is the situation. It is true that there were some exhibits also to be filed by the defendant.

The Court: Now, as between the parties to that litigation, the parties before the court, don't you think that a

final decree ought to be a final decree as to the parties to that litigation?

Mr. Williams: I think it should conclude us against any further suit against the Frank Miller Company, yes, except if that is intended to mean that we cannot pursue our suit which had been first started against the Hollingshead Company, and wherein we had an injunction, I do not think it should conclude that suit. It seems to me that we should have had in fairness and reason the right to elect, if we so desire, whether to prosecute the Hollingshead suit and let the adjudication of that suit determine whether or not its subsidiary, the Frank Miller Company, could operate. If there should be an injunction in the Hollingshead suit and if there is the privity or identity which we allege, and which the defendant now urges in Tennessee, I should say that an adjudication in the Hollingshead suit granting an injunction and holding the patent valid and infringed could be enforced by that court against sales made by the subsidiary, the Frank Miller Company. But I think that since we were satisfied with the remedy which could be exercised, the relief which could be granted in that suit, and since the defendant had gone to expenses in [fol. 386] this suit—although as a matter of fact the identical evidence that they offered here, the exhibits which they offered here have all been offered there; the counsel who were here were the counsel originally there, and while it was alleged here that large expenses had been incurred in preparing the defense of the Frank Miller case here, I think very likely as a matter of fact that it was the same identical expense that was incurred once and for all in both cases, for I do not think there was any substantial duplication or additional expense because of the additional suit.

However, that may be I do think that since we were willing to rely upon the relief which could be had there we should not be permitted later to come back into this court and endeavor again to assert our rights which we have once asserted and which we had once made the basis of our motion to dismiss. I mean by that to make a full and responsive answer to your Honor's question. If I have not done so, I would be glad to endeavor to answer another.

The Court: What was in my mind was this: This New Jersey defendant—what was their name? Mr. Williams: The Frank Miller Company.

The Court: Don't you think that was a final determination as to the Frank Miller Company?

Mr. Williams: Final in the sense of a voluntary motion to discontinue or dismiss, yes. I do not think it was intended to estop us or bar us from the prosecution of the Hollingshead suit, which had already been started and in which there was at the time an injunction. I do not think that the order entered here was intended to work the vacation for the order of injunction there. Now, if it was final in every conceivable sense that would have been the sense of it. If it were a decision upon the merits, under the authorities, I would say that it required the court there to vacate the injunction and simply dismiss the suit there upon the ground that the suit here had been dismissed. Now, that is upon the assumption that it was final in every conceivable sense and I think that it was not the intention that it should be. I think that the matter can be in a measure tested by considering what may happened in the——

The Court: May I interrupt you just a second. Suppose that case instead of being discontinued had been decided by me and I had dismissed the bill of complaint, what [fol. 387] would the effect of that dismissal have been as regards the Hollingshead Company?

Mr. Williams: If there is the identity of parties which we claim, and the identity of cause of action, which there is as we contend—that is everything that was here was involved there, unless there was something more involved there than was involved here, but answering the question only in so far as the identity of claims of the parties were concerned, assuming that they were fully identical, then I should say if there had been here a decision upon the merits which took the form of an order of dismissal that would constitute a res judicata and an estoppel by judgment which could be treated there, and which would have necessitated an order of dismissal in that suit upon that ground. And then the practical result would be that because that was done here, without prejudice as I understood, and I think as the court said several times during

the argument, there would then be dismissal of final form and character in both the suits and with no adjudication of the merits of the questions of validity or infringement in either suit, except as the naked order of dismissal may imply or impute the assumption or the presumption that it was a decision on the merits of the case. And that I think was not had and would not then be had in either court.

The Court: Not wishing to unnecessarily annoy you, would you tell me what form you wish that final order to take?

Mr. Williams: I wish that final order to take the form which it originally had, and which was as follows: "That the above entitled cause be dismissed, with the taxable costs to the defendant to be taxed by the clerk, but the court not having decided the merits of any question in issue this order shall not prejudice the right of the plaintiff to prosecute its suit or claims against the R. M. Hollingshead Company."

The Court: Now let me hear your adversary. I am not closing you entirely. I would just like to hear what they had to say.

Mr. Lynch: May I present Judge Burch, of Tennessee?

Mr. Burch: May it please the court, I am the party that my adversary, Mr. Williams referred to a moment ago as [fol. 388] having made an efficient argument, and at the outset I want to thank him for that very grateful tribute.

I have been in the Tennessee case only a short time, and as I argued before the District Judge in Tennessee this question of res judicata I was asked by counsel in Philadelphia to present the matter to your Honor, and in order not to wear out my welcome in this court, where I hope I may come again, I will present my points just as briefly as possible.

First, may it please the court I would like to ask a question, because I am in a jurisdiction with which I am not familiar, as to whether or not this is the January Term of the Trenton court, or whether it is some subsequent term.

The Court: This is the April Term.

Mr. Burch: Then may it please the court, I submit this suggestion——

The Court: That we have no power to change, alter or effect our decrees when the term is passed.

Mr. Burch: Yes, that is point number 1.

The Court: I am familiar with the cases upon that point.

Mr. Burch: That is my point number 1. It is an elementary principle of law. I need not cite authorities on it. But if it were the same term, then I am quite prepared to meet the argument of the learned counsel on the other side, assuming that it was the same term. Here is an order of dismissal that has been entered at the instance of the complainant, the same complainant—I am using a legal term that we have in our Tennessee Chancery practice——

The Court: If you will just excuse me a second. This order as presented to me had the words "without prejudice" in it. I did not like those words "without prejudice" because it seemed to me that if this New Jersey corporation were again sued here in this district that they were imposing a tremendous burden upon that New Jersey defendant. Now, I am of the notion that those words were stricken out with the idea that that would prevent a similar suit being brought against this New Jersey corporation.

[fol. 389] Mr. Burch: I quite concur. That is the construction which I placed upon it as soon as I saw the decree and learned of the circumstances under which it was entered.

Now, as I understand, and your Honor will correct me if I am mistaken in any facts as I want to be absolutely fair and frank, my understanding is that this suit against the Frank Miller Company, a suit in equity, had progressed to a certain stage, that the proofs were in, the plaintiff had presented its proof and the defendant had presented its proof and counsel had appeared at the bar of the court and the case had been fully argued at the bar of the court on November 29th, as I understand from counsel, and the case had gone to that stage that the record was ready for decision. Everything was in the record that it was necessary for the court to have in order to decide the case. The only thing that has been suggested that might possibly be lacking was some briefs and, of course, as well all know as lawyers a brief is merely a reminder of what has

been stated in oral argument, and a citation of authorities.

The Court: I am of the opinion there was no oral argument. I think briefs were to be submitted and then there was to be an oral argument after the briefs had been submitted and exchanged, so that the oral argument would take a very short form. So that there was quite a good deal more to be done in the case.

Mr. Burch: Yes.

The Court: At the most, the testimony was in. Now, I am right in that I think.

Mr. Lynch: I think that the oral argument took place, may it please the court.

Mr. Williams: There was an oral argument upon a motion for preliminary injunction upon certain affidavits which had been filed on both sides, and then when your Honor suggested that we let the matter go to final hearing it was agreed and allowed that both parties might file additional affidavits and additional affidavits were filed on our side, and as I recall additional affidavits were filed by the defendant. If I am wrong as to the affidavits—because Mr. Kalish shakes his head—I know I got numerous letters from him asking if we would stipulate this, that and the other, which we did in a large measure, and there still remained his exhibits to be filed.

[fol. 390] Now, the record put before the court before the briefs were to be filed comprises four or five times as much matter as in the record when the motion for preliminary injunction was argued, and I dare say your Honor never looked at any of that evidence——

The Court: You are quite right in saying that I did not look at it. Now, let me intruce a second more. If this decision of mine dismissing this bill is such a final decision as amounts to res judicata as against the Hollingshead people, then it would seem to me that the plaintiff had euchred himself out of his day in court.

In other words, he comes in with a decree which the court has not ordered, as says: "I want to dismiss. I want to discontinue." And I say, "You want to discontinue against whom?" and he says, "The Frank Miller Company." I say, "Do you think the Frank Miller Company ought to be subjected to another suit in this jurisdiction about this cause? This is a busy court. We have now

spent several days on this matter. Are you coming in again against the Frank Miller Company?" and he says "No, I am not." And then I say, "Well, then, let us strike out these words 'without prejudice' so this will be final here in this court as to Miller," but if it is final against Hollingshead then it would seem to me that he has entered a decree from which he cannot appeal.

He cannot ever get a final adjudication as against Hollingshead, and if he discontinued against Miller whom he regards as a smaller infringer he is out of luck. He has lost his rights. Now, that is the big problem.

Mr. Burch: I appreciate very much your Honor's statement of the proposition, and I shall address myself to it. As counsel has properly stated in February, three or four weeks before the argument on February 28th, the plaintiff, the Bassick Manufacturing Company, states they learned that the Miller Company was a subsidiary of the Hollingshead Company. In other words, several weeks before the offer to dismiss was made the plaintiff had knowledge of the privity of relationship between the Hollingshead Company and the Miller Company. The plaintiff, therefore, knew several weeks before February 28th that it had a suit in the United States District Court for Tennessee and a suit in the United States District Court at [fol. 391] Trenton with the same plaintiff and the same defendant. I say "same defendant" because while the name in New Jersey was Frank Miller and the name in Tennessee was Hollingshead, the plaintiff knew that Hollingshead and Miller was one and the same; that they were inter-related corporations and there is no conflict in the affidavit filed before your Honor on February 28th as to the privity of relationship—as to the fact. There is a little controversy as to the nature of the corporation——

The Court: But assuming that was so, why should I be annoyed because they took their litigation down to Tennessee with them?

Mr. Burch: I do not think your Honor should.

The Court: But what is back of my earlier question is this: If this decision of mine is res judicata against Hollingshead, then the plaintiff in the New Jersey action, by discontinuing, has done himself a worse service than if I had decided the case against him. Because if I had decided the case against him there were fifteen chances

out of one hundred to have my decision reversed in the Circuit Court of Appeals. If, however, the Circuit Court of Appeals did not reverse me, he would have then had a conflict of decisions in the Circuit Court of the United States and he could have certioraried up to the Supreme Court; Now, if your argument is right that by entering that order of discontinuance against Miller he put himself out of court, he put himself entirely out of court, because he did himself more injury than if he lost his cause, not only in the District Court but also in the Circuit Court of Appeals. It was tantamount with the decision in the Sixth Circuit that say-, "I am all wrong, the courts who have decided in my favor are all wrong, and I have to run for cover." And in running for cover he got nothing.

Mr. Burch: Your Honor understands that this matter of res judicata has not been decided by the United States District Judge at Memphis. We have filed a supplemental amendment to the answer setting up this defense of res judicata. Mr. Williams, on the other hand, in the Memphis court denies that it is a case of res judicata, and we have argued the question in that court before Judge Anderson and expect to argue it further. We insist that the decision did have the effect of res judicata, and he makes an able argument in favor of his position.

The place to determine whether or not a matter is res [fol. 392] judicata is the court in which the defense is filed. It is an undetermined situation in Memphis, we insisting that it is res judicata and Mr. Williams insisting that it is not.

Now, to pursue my argument a little further, if I may do so——

The Court: I do not conceive that when Mr. Williams entered that order that he had any comprehension that that order would be given such an effect, because as I tried to point out that if he did, then by presenting that order he was abandoning a perfectly clear legal position, so far as the Sixth Circuit was concerned, and forever closing the door to his client to assert as they could, but for that order, even if they had an adverse decision, that they were still entitled to a basic patent.

Mr. Burch: Only so far as Miller and Hollingshead were concerned, not as to other defendants who were claimed to have infringed.

The Court: Hollingshead is pricipally occupied in Memphis, Tennessee, is he?

Mr. Burch: No. in Camden, N. J. That is the place of the factory and plant of the Hollingshead Company. The Memphis place is a very small subsidiary of the main office and main plant in Camden, N. J.

Now, if I may pursue this a little further, may it please the court, and I know that your Honor wants to get at the equity of this situation and that, of course, is always what a court of equity desires to do. Two or three weeks before February 28th, when the motion for dismissal was made, the plaintiff in this case, the Bassick Manufacturing Company, knew that it had a suit in Memphis and knew that it had a suit in Trenton about the same matter and against the same inter-related parties. In other words, it had two suits, one in one jurisdiction and one in another jurisdiction about the same subject matter and between the same parties, if my contention about privity is correct, and that seems to be conceded. The law permits that. The law permits the plaintiff to sue the same defendant in this jurisdiction and also in another jurisdiction, but from the beginning of time the law has said to a party who brings two suits instead of one—"You can do that if you want to, but you must remember you are playing with dynamite, [fol. 393] and when there is an explosion in one place that explosion will be felt in another."

Now, when the parties came before your Honor on February 28th, as I understand, of course, your Honor will correct me if I am wrong, it was represented to your Honor not only that the plaintiff knew about this suit in Tennessee, but that the reason the plaintiff wanted to discontinue the suit in New Jersey was that it had a similar between the same parties in Tennessee and had already obtained a preliminary or interlocutory injunction in Tennessee. The situation on February 28th was not one brought about by the defendant. The defendant did not invite this dismissal, but opposed it, as I understand it, and objected to the dismissal. It is not a situation where a defendant has entrapped or ensnared a plaintiff into entering a decree. Here is a decree which the plaintiff comes in, of his own motion, and says "I want this decree and I want it without prejudice," and then there comes the usual argument that takes place, the defendant objecting to that kind of decree and

finally the matter being decided by your Honor, who directed, as I am told, that the words "without prejudice" be stricken out.

When your Honor made that decision at Trenton, the plaintiff could have said "I had rather not have a dismissal at all if the words 'without prejudice' are to be stricken out. I will let the case go on for decision." The record was complete. Everything could have been done. All that he need to have said at that time, and he can still say it if he wants to, "I except to that decree."

The Court: But under our New Jersey equity practice he does not except to any decree.

Mr. Burch: But he could have said in effect: "Your Honor I wanted a decree without prejudice. Your Honor has stricken out the words "without prejudice," and I will take that case to the Circuit Court of Appeals for the Third Circuit in order to determine whether or not your Honor was right in striking out the words "without prejudice," when I made my motion to dismiss at the then stage of the proceedings."

Now, of course, he can still take that appeal if he wants to. This decree was entered on March 21st instead of February 28th. I do not know what the discrepancy is as to the dates.

Mr. Williams: I had hoped it was entered on February 28th.

[fol. 394] Mr. Burch: It is immaterial at any event. A plaintiff cannot play fast and loose with the court. I am not meaning to reflect on the learned counsel for the plaintiff——

The Court: No, I do not think that Mr. Williams wants to play fast and loose with the court, but I think that what really happened in this case—maybe I ought not to say that—but I think that what he wanted was an adjudication in the other case. In other words, I suppose the jurisdiction of the District Courts are co-ordinate and he preferred to have a judgment in the Hollingshead case to a judgment in the Miller case. In other words, he preferred to have Hollingshead, a party defendant to that suit, enjoined. And it may have been that being an astute man he formed some judgment as to what my decision was likely to be, but as I tried to point out to him it would not make any difference to him what my decision was anyhow, because he would have gone right on up with it. In other words, he had two

other courts open to him to which he could go. Now, if your contention be right that the dismissal is res judicata, not only in the Miller suit but in the Hollingshead suit, then he has put his head in a noose and hung himself.

I do not believe that the law is in such position that astute counsel hangs himself that way, and I think that you will agree with me that Mr. Williams is astute counsel, and I do not think, if you will pardon my saying so, that in this state of the law when, at least, for 75 or 100 years a struggle has been made to get decisions on the merits that we ought to go back to the old books to Colt, and Middleton and the other early writers; to see whether Mr. Williams has lost his day in court.

Mr. Burch: I quite agree with all your Honor has said, and I would not go back to Colt and Middleton, but exactly to the same decision Mr. Williams referred to in 265 United States In re Skinner and Eddy Corporation.

The Court: I do not quite understand that.

Mr. Burch: It sounds certainly bombastic and conceited if I said I did understand it, but I will at least give you my conception of what that case is. It is always helpful in reading a decision to first acquaint yourself with the facts upon which that decision was based. Now, the Skinner & Eddy [fol. 395] Corporation case was this: They had a claim against the government of the United States and filed the claim in the United States Court of Claims. The proper department of the Government filed an answer to that claim. The Skinner & Eddy Corporation thereupon concluded, for reasons best known to itself, that it did not want to prosecute its suit in the Court of Claims, but in the United States District Court in one of the far western states, so it went before the Court of Claims and asked for leave to dismiss without prejudice. As soon as it asked to dismiss without prejudice, I believe that the government asked leave to file a cross bill, but the motion to dismiss without prejudice was granted first. That case went to the United States Supreme Court on that state of facts, where no proofs had been taken and nothing but pleadings filed and claim and answer, and the question was whether under those conditions the plaintiff had a right to dismiss his suit without prejudice. Chief Justice Taft, however, was very careful to word his opinion. Now he begins: "It is ordinarily" (not always) "the undisputed right of a plaintiff to dismiss a bill in equity" (when)—"before final hearing." Now, I call

your Honor's attention to the qualifying language, "It is ordinarily"—not always—"before final hearing" that he has the right, but he never has a right after final hearing.

Now, I think I can show to your Honor by decision of the Federal Court that final hearing means when the case has reached that stage that a decision can be rendered upon the pleadings and the proof. Certainly, my learned friend cannot contend ——

The Court: Just a second. What we New Jersey lawyers speak of as final hearing is analogous to this situation: The Judge is on the bench and the jurors are in the box. The plaintiff has put in his proof and the defendant has put in his proof. Counsel have not started to sum up and the Judge has not delivered his charge. Plaintiff's counsel can in that situation, and sometimes does, move for a voluntary non suit. We must grant it.

Mr. Burch: We have exactly the same practice, but that is by virtue of statute.

The Court: The books on the thing go back to the early times of the state.

[fol. 396] Mr. Burch: In my memorandum which I have prepared ——

The Court (continuing): Now, I could not prevent in that situation plaintiff's counsel starting over against this same defendant. In fact, he often does it. My notion was—here is Miller. He has come into court and put up his money on this thing defending this suit. They have taken several days of our time with this patent. Now, if they do not want our decision let them discontinue, but I do not want to see them here again. So in sort of an arbitrary way, I took my pencil and struck out the words "without prejudice." Now, I do not think that ought to be an estoppel by record or a case of res judicata in another court, for what you say is so—the term has gone by, but the Appellate courts are open. But I do not think it ought to be urged as a matter of res judicata in another court.

Mr. Burch: Of course, we do not know until after Judge Anderson passes on it that the defense of res judicata is good or bad, because he has indicated no view of it at all up to the present time. Now, in my investigation of this question, your Honor, I have confined myself entirely to the federal authorities, decisions of the Supreme Court of the United States and the Circuit Court of Appeals for the reason that as I understood the practice on the equity side

of the federal court is the practice of the High Chancellor of England as it existed up to 1842, with such amendments as has been made in the Supreme Court of the United States in decisions and rules promulgated since that time, and I do not feel that decisions in equity cases in regard to dismissal without prejudice would have had any particular value here inasmuch as it is a question to be decided according to the law as administered on the equity side of the federal court, so I have confined myself to the equity decisions, and it seems to me plain, may it please the court, and I say this with great deference, your Honor, that this case having reached the stage to which it had gone before your Honor when the motion to dismiss was made, it would have been error to have dismissed the suit without prejudice.

Now, if it had been a situation, as I say, where the defendant had in some way induced the plaintiff to take a course of this kind, where the defendant had been guilty of any bad faith, that is a different proposition. But this is the plaintiff's own course, guided by learned and astute counsel [fol. 397] as your Honor has most properly said, knowing the law and learned in the law.

The plaintiff comes into court and asks your Honor to allow him to dismiss this suit. Can counsel come in now and say "I had not studied the authorities then as much as I have studied them since?"

The Court: May I see the best authority you have?

Mr. Burch: Yes, this case of 265 U. S. holds that the dismissal may be before the final hearing. Now, I am going to read your Honor some authorities on what is final hearing. I have a great number of federal cases here. The next case on this subject is a very noted case in the law, the case of Pullman Palace Car Company v. Central Transportation Co., 171 U. S. 139. This was in the days when the pullman or sleeping car transportation was divided between the Pullman Company in the west and the Central Transportation Company in the east, and the Pullman Company entered into a contract for the lease or purchase of the Central Transportation Company.

I happen to remember Mr. Choate was one of the counsel of the case. The Central Company sued the Pullman Company on this contract and these suits were in progress. Finally, the Pullman Company became tired of all this

litigation and it filed a suit against the Central Transportation Company from bringing any more suits against it and, of course, having gone into a court of equity it was necessary for the Pullman Company to do equity, and they said "If this is a valid contract we will pay according to the contract, or if not, on a quantum meruit basis. This bill was answered by the Central Transportation Company, and then the Pullman Company asked leave to dismiss its bill. The court denied the right to dismiss the bill. The case went to the Supreme Court of the United States and the Supreme Court said: "No, you have no right to dismiss this bill. You brought these people into court. You set up in your bill here that you are willing to pay them what is due them and they filed an answer saying that they want what is due them. They accepted this tender. They are entitled to get what is coming to them. They are entitled to affirmative relief.

The Court: Was not there in New York a decision by Judge Learned Hand with respect to patent cases where the question was validity and infringement, and a dismissal before decision?

[fol. 398] Mr. Burch: I think I have the decision your Honor refers to. I have several patent cases here in which it is held that where plaintiff brings suit for an infringement of a patent on account of the defendant selling or using some device that he claim infringes that patent, and the defendant files an answer, although he does not designate his answer as a cross bill and does not ask for any affirmative relief in his answer—not knowing patent law—he is entitled to affirmative relief as and whether his particular device is an infringement of the plaintiff's device. That is just this case.

The Court: But what do those cases hold, because I can see a line of distinction between this Pullman case and these patent cases.

Mr. Burch: I will read that to your Honor. I am reading now a quotation from Judge Taft's opinion—then a Circuit Judge—in the case of City of Detroit v. Detroit City Railway, 55 Fed. 565, in which he is discussing the general rule as to the right of the plaintiff to dismiss without prejudice. "In Electrical Accumulator Co. v. Brush Electric Co. 44 Fed. Rep. 603, Mr. Justice Brown held that where, under an answer, and by virtue of the statute controlling

patent litigation, a defendant was given a right, in the nature of affirmative relief, to have the patent sued on declared void, and the case had been pending three years, the defendant was entitled to have the original bill heard in spite of a motion to dismiss. In Manufacturing Co. v. Waring, 46 Fed. Rep. 87, Judge Lacombe held that a complainant was not entitled or right to dismiss his bill after the answer is filed, setting up that the license to use a patent upon which the suit is brought is fraudulent and void; and showing that defendant is entitled to a decree for its cancellation."

No, I call your Honor's attention to the position of the defendant in this case. They cannot sell this lubricating device and this coupling device. The decree in the Memphis case binds the Miller Company and the Hollingshead Company. Now, here is a case in New Jersey, in the home of these people. It has come before your Honor and it is ripe for decision and the decision is at hand. What that was going to be, I do not know. That was for your Honor's determination. Now, can the Bassick Company in that case, for reasons best known to itself, after the proof is all in, come into court and say "I dismiss without prejudice." If he can do that the next day he can bring another suit [fol. 399] and carry the Miller Company through a long string of litigation and never give an injunction bond, but hold this litigation over the head of this defendant so that it could not do business anywhere in this country. Now, if that could be done there would be similar successive suits until the right of the plaintiff's business had been exhausted.

The Court: Where is that case in the Second Circuit on voluntary dismissals?

Mr. Burch: Judge Lacombe of the Second Circuit. I think that he was the New York Judge. I find in this decision in the case of Hat-Sweat Manufacturing Co. v. Waring, 46 Fed. 147—I am quoting from the head note: "A complainant is not entitled as of right to dismiss his bill after the answer is filed, setting up that the license to use a patent upon which the suit is brought is fraudulent and void, and showing that defendant is entitled to a decree for its cancellation."

Now, hastening along, may it please the court, I find a very full review of all the federal decisions in the decision by

Judge Brown in the District of Rhode Island in 232 Federal 784 in the case of Young v. Samuels. I will give your Honor a copy of this memorandum and, of course, will be glad to furnish the authorities to Mr. Williams. In that case Judge Brown, of Rhode Island, discusses a conflict of authority between the First and Second Circuits as to the right to dismiss without prejudice, and in the course of this opinion he says:

"It may be questioned, however, whether the broad statement of the right of a plaintiff to discontinue, even after the proofs are closed and all the material is ready for a judgment on the merits, can be justified on principle. So broad a right to discontinue may enable a plaintiff to avoid a decision against him, when he has found that, upon the proofs taken and completed as required by the rules of court, a decision against him upon the merits is inevitable if the case proceeds. This, it seems to me, may work a substantial prejudice to a defendant, and amount to a substantial deprivation of his right to end the matter in the tribunal before which the plaintiff has brought him.

"This is something more than subjecting him to the annoyance of subsequent litigation; it is a deprivation of his right to the fruits of the labor and expense which he has al- [fol. 400] ready been to in following the course prescribed by law and by the rules of court. In many cases this involves a very great expenditure of time and money, and any rule which ignores this seems unjust to a defendant."

Now, quoting from some opinion, he adverts to one of the Justices of the Supreme Court of the United States, when they had time to go on the circuit. He says:

"In Folger v. Robert G. Shaw Co., Fed. Cas. No. 4,899, a case in the First Circuit which deserves careful consideration, Justice Woodbury said:

" 'I have assumed as the guilding principle, it being the only one conceivable by me, that the precise stage in which the discontinuance should be allowed without a judgment on the merits, and as a matter of right if claimed by the prosecuting party, is any progress in the cause which has not yet furnished means to the court for a correct final decision * * *

"'Each party should have somewhat similar rights in respect to such a subject; and the great inquiry is: When the plaintiff must be compelled to stop to exercise this power, as another action? This is the precise question here: When that stage must be considered as reached? The rules of practice do not seem to be entirely uniform on this point, and have become more rigid in modern times than anciently. But I apprehend that the principle which must govern it is that before indicated, and which is that this act must be done at some period before the merits can be ascertained for a final judgment, or the plaintiff is not entitled to do it as a right. * * *

"'Now it does not seem to me to be consistent with principle that a case, standing here with pleadings completed, evidence taken, and all things ready for argument and final decision, should, undecided on the merits, be abandoned by the payment of costs, without the consent of the defendant, when, after so much expense and delay, he asks a final judgment upon the merits. In such case the merits are likewise susceptible of being ascertained and settled, which is not the situation of things before pleadings are finished and evidence put in. In my view, then a defendant, under such facts and in such a stage of the cause, has a right to object to a dismissal of the cause, or a discontinuance, [fol. 401] unless by the judgment of the court on the merits, or perhaps a leave granted by it for a discontinuance for strong reasons.'"

Now, that is a recent decision.

The Court: Now, may I make one more inquiry, then I am going to lunch, and that is this: If the defendant wants a decision how much more does he get if the court decides the case than if the plaintiff discontinues. If he has an answer and cross bill, of course, he gets affirmative relief. But if he has not, he gets nothing more by a discontinuance. Now, as far as this Miller concern is concerned, they got just as much by a discontinuance in this suit as if they had been unsuccessful here. But you want to read into that an estoppel by record as against Hollingshead and the whole world.

Mr. Burch: That is what I am trying to read into the Tennessee court, if the Tennessee court will sustain me.

The Court: We will take a recess now, gentlemen, until 2:15.

After Recess

The Court: Am I to understand that the defendant is of the feeling that this case should be decided upon the merits and that it would be decidedly easy upon the defendant's motion to vacate the order of discontinuance and enter a decree upon the merits. To enter a decree upon the merits would involve my examination of the case. My recollection is that the prior art is all that is of any interest in this case. How would that be?

Mr. Burch: I did not quite get that your Honor.

The Court: I will repeat. All that I had in mind was that possibly the easiest way would be to vacate this decree of discontinuance and decide the case upon the merits.

Mr. Jones: As if the decree had not been made at all?

The Court: Yes.

Mr. Burch: Does your Honor decide that now?

The Court: I do not see why that would not be a perfectly good way out of the situation.

[fol. 402] Mr. Williams: I do not know whether you are interested in hearing a suggestion as to another way.

The Court: Yes, I would be glad to hear of many ways.

Mr. Williams: I have one to offer, or a reason for the one that I have proposed in the motion which is before your Honor. I think that we all appreciate before I start that in 1919 $200,000 were invested in this Bassick Manufacturing Company, and no further investment has been made. The business now pays a profit of more than $3,000,000 a year, and the question is whether the pen line that was drawn through those two words was done deliberately, or whether it was unintentional——

The Court: My dear sir, let me suggest something to you. The reason I say if that decree had the effect claimed for it then it had more effect that a determination upon the merits is because a determination upon the merits would be merely an invitation to take an appeal to the Circuit Court, and if you lost there you still have the door open to certiorari to the Supreme Court of the United States.

Now, if I vacate this order of discontinuance and take the case on the merits then it is merely one of 100 patent cases that I decide during the course of the year. Now, I try to

be as conceited as I can be, but I cannot view my decision of any patent case as of very much authority. It is pleasing to me but it has no terrific force or effect. In other words, if the entry of a discontinuance on your motion has the effect that is claimed for it, then it is the most potential thing in life.

Mr. Williams: Well, it is the death of the Bassick Company's business.

Now, answering your Honor's suggestion as to vacation and decision on the merits—the intimation is to your Honor and the assertion is in Tennessee that we knew that the decision of this court was going to be adverse to us, and that we are terrorized at the thought of appearing before the Circuit Court of Appeals for the Third Circuit. I am not going to try to explain my emotional reaction.

The Court: I think that during the course of a trial I expressed myself as not too much in favor of the patent. Now, [fol. 403] I have done that in other cases and after I read the briefs and re-examine the law I came to diametrically opposite conclusions to what my first impressions were.

Mr. Williams: If the court please, I have here three volumes that contain absolutely nothing but the conclusions and decrees and the orders for preliminary injunctions in the United States courts under these patents. We have commenced more than 200 suits under them. I think considerably more than 100 have been decided. Those suits have been brought in additional to the suit here, the Frank Miller case. They have been brought in every district of the United States with the exception I think the Fourth—maybe there are two, I do not remember—but we have brought suit in Philadelphia and in Pittsburgh which have been decided. Your Honor's indications were upon the argument for the motion for preliminary injunction—well, I will not attempt to say—I was not terrorized by what was said then.

The Court: I do not think that any two footed patent lawyer whom I have ever met was terrorized by any court that I have ever seen. In other words, if any patent lawyer or any other lawyer becomes terrorized by reason of any action of the court then it is time for them to surrender their license and say "We will no longer practice law."

Mr. Williams: Whether I was terrorized or not, of course, is of no consequence.

The Court: I assume you were not. You look to me like a man who would not be terrorized by man or devil.

Mr. Burch: I cannot terrorize him. I have tried.

Mr. Williams: By the vacation of that decree and the submission of briefs—there was a motion pending on February 28th to file some exhibits, if they were filed and briefs submitted and the case decided on its merits it could go on the merits to the Third Circuit Court of Appeals. By the astuteness that has been attributed to me, I had this in mind, that in the Sixth Circuit we had the decision in the Circuit Court of Appeals on ten bills and cross bills involving these patents. We have the Hollingshead Company under preliminary injunction there. That was issued more [fol. 404] than a year ago, long before the Frank Miller case was started. The court permitted the defendant to come in with three alternatives and proposed construction and ask the judgment of that court, whether it could make any of these other things without infringement, and the court submitted that to a master, followed several weeks later by the submission of briefs to the Master, who decided that under the decisions of the Sixth Circuit Court of Appeals the Hollingshead Company could not do any of these three things that it proposed to do.

It has been said we should suffer the penalty suggested here, because it was of our doing that the Frank Miller case was started.

I would like to suggest that while we started that suit in complete ignorance of any relationship between the Hollingshead and the Miller Company, the defendant knew before and at all times that there was that relationship and no doubt if they had come into this court and said then, as now, "we are the same as the concern being sued in Tennessee," that this court would then have continued or stayed it pending the outcome of that suit. It was because of our ignorance that we came here and when we learned the true facts and what the defendants have known from the beginning, we endeavored to have this suit discontinued or dismissed, in order that we might proceed with the other to a conclusion, and in a circuit where it so happened that the Sixth Circuit Court of Appeals had announced decisions and where the master there and the other courts have interpreted it to mean that the Miller Company and the Hol-

lingshead Company could not do what they were proposing to do.

As an alternative to your Honor's suggestion I have this to say, that there is an authority, and I know your Honor rightfully wants to hear the best— I have a Circuit Court of Appeals case here, a Ninth Circuit case, reaching a decision that an order such as we have here might be explained or supplemented in the manner we propose. Here the case was based upon facts almost exactly parallel with the facts here, and upon facts which distinguish our case here from any and all of the cases that have been referred to. These cases that are cited involved, almost invariably, a situation where there had been a dismissal in one suit and where subsequently to that the plaintiff undertakes to commence and maintain another suit commenced at a later date, and then the question is whether the dismissal or the adjudication, or the judgment in the first is binding on the second, [fol. 405] and how far. As distinguished from all of those the suit in Tennessee was commenced a year before the suit was commenced here. It had proceeded to the point where there was an injunction issued there, six or eight months before even the commencement of the suit here.

The first suit was the suit commenced against the Hollingshead Company as distinguished from the Frank Miller Company which is, if anything, a subsidiary. It was commenced where we first learned and the only place where we knew anything about any infringement by their concern at the time it was commenced, and it was commenced where the Hollingshead Company, although it has its main office in Camden has one of its many branch establishments which are scattered throughout the country.

No one will deny, who has followed this litigation, that the Bassick Manufacturing Company in its effort to maintain the monopoly the courts have accorded to it, they cannot be said to have hesitated anywhere or against anyone at any time to commence a suit in an effort at least to maintain the rights which it claims to be their own. We commenced that suit there where we learned of the infringement and immediately and where we learned of it, and against the party who apparently was carrying it on.

Now, my other suggestion is the one based upon the case of Bernard v. Able, a case reported in 156 Federal 649, a

decision by the Circuit Court of Appeals for the Ninth Circuit, and from that I wish first to state the facts and then to read a little bit, because the facts are exactly parallel, as it seems to me, with the facts here, and the relief which we ask for here parallels the relief which the court granted there. Preliminary to that, let me say that despite all the authorities which can be read in support of claims upon limitation of the right of the court, after the term, to modify and supplement and so on, every text writer and every court concedes that courts have the right at any time to correct errors in their judgment—inadvertence in their judgment—the inadvertence either of courts or of counsel.

Now, this case of Bernard v. Able involved facts like these. They were petitioners in a bankruptcy proceeding, a petition in involuntary bankruptcy. Those petitioners had suits pending in the state courts, which had been commenced. They saw fit to come in in the bankruptcy proceeding and moved to dismiss and their petition was there dis- [fol. 406] missed without any reservation, without any expression of the dismissal being without prejudice. I have exactly stated the facts here as follows: The basis for the suit was a petition in involuntary bankruptcy after answer and replication had been filed. The petitioning creditors moved the court to dismiss the proceeding 'without right to further prosecute.' Thereafter, the court entered a judgment of dismissal, reciting that the motion came on regularly to be heard upon motion of the petitioning creditors praying for a dismissal of this petition without right to further prosecute. And thereupon it was ordered 'that the petition herein be and the same is dismissed without right to further prosecute their claims.'" Tantamount, as I view it, to the flat footed order of dismissal entered in this case. "Thereafter the petitioning creditors moved the court that the order of dismissal be modified so as to show that the right of the petitioning creditors to sue upon their claims in the state courts was preserved by limiting the right to further prosecute, referred to in said order, to bankruptcy proceedings." As we contend here that we should in equity and good conscience have a right to prosecute the suit which we first started against Hollingshead Company. The defendant, Bernard, then objected to the said motion on the ground that the time designated in the notice was beyond the term. The court overruled Ber-

nard's objection and exceptions were allowed. Thereafter on the same date the court entered an order reciting generally: "It appearing to the court that the judgment of dismissal filed in this cause on June 13, 1906, was inadvertently entered, and by inadvertence did not conform to the motion to dismiss the action filed by the petitioners." It was then ordered that the judgment of dismissal be vacated and expunged from the record, and that the bankruptcy proceedings "Is hereby dismissed without right to further prosecute for adjudication of bankruptcy under the national bankruptcy law for any of the causes alleged in the petition herein." It was ordered that said judgment 'be entered nunc pro tunc as of date June 13, 1906.' Bernard thereafter filed a bill of exceptions a bill praying therein for a review of the proceedings. The respondents demurred to the petition for review upon the ground that said petition did not state the facts sufficient to entitle the petitioners to a writ. Now, the opinion of the court in that case was as follows: "The principal question involved is whether the court had authority to vacate the judgment of dismissal, and to make a judgment nunc pro tunc at the time and under [fol. 407] the circumstances stated. * * * 'It is a familiar doctrine,' said the Supreme Court in Insurance Co. v. Boon, 95 U. S. 117, 24 L. Ed. 395, 'that courts always have jurisdiction over their records to make them conform to what was actually done at the time; and, whatever may have been the rule announced in some of the old cases, the modern doctrine is that same orders and amendments may be made at a subsequent term, and directed to be entered, and become of record, as of a former term.' "

"This power is one to make the record speak the truth. It is salutary, and enables courts to prevent injustice through mere mistake or inadvertance of the judge, or counsel, or the clerk. After the expiration of the term at which a judgment is rendered, there is no power in a court of law to amend a record in order to make it show that which did not take place, as to do this would be to exercise a revisory or appellate power of the court's own decisions; but, upon proper showing, the power to correct a record by amending a judgment at a subsequent term is thoroughly well established. * * * The record in this case shows that the first judgment of dismissal did not conform to the motion for dismissal. It clearly appears that litigation

between certain of the creditors and Bernard was pending in the state courts when the order of dismissal of the bankruptcy proceedings was applied for, and that the original motion to dismiss did not contemplate a judicial injunction by the bankrupt court against the pursuit of that litigation. It is evident that all that the court meant by its action was a dismissal of the proceedings in bankruptcy, without right to carry on such proceedings, and such only, any longer. But, by inadvertence, the order read as if it intended to cut the creditors off from carrying on their suits in other courts to recover certain claims. That the court, under the circumstances, was within its power when, upon motion, it made its record speak the exact truth by limiting the words expressing its meaning seems too plain to require further discussion." * * * "Under the circumstances, therefore, if petitioning creditors wished to dismiss their petition in bankruptcy, and to try their suit in the state court, they had a right to move for a dismissal of the bankruptcy matter, and, if the court believed they were in good faith, to obtain such an order. The petition for a writ will be dismissed."

The Court: I think that the largest argument was to the effect that this court after the commencement of a hearing, [fol. 408] or a cause in equity, had no power to dismiss without prejudice. In other words, he makes two arguments—one is that the term having passed the court has lost control over its decree; the other is, that the court at all times has no power to enter a final decree of dismissal over the protest of the defendant.

Mr. Williams: I know of no authority of law, and I do not recall any having been cited, to the effect that the court cannot at any stage short of the decision upon the merits, dismiss without prejudice, except where there is a counterclaim or cross bill asking affirmative relief. Courts have done it. I do not question that. That is, they have refused to dismiss at various stages—sometimes at early stages.

The Pullman case was cited here, where without any trial, simply on bill and answer and tender the court refused to dismiss without prejudice, but I think that the law is that courts are free in these cases to determine at any stage short of the decision, whether or not a case may be dismissed and the terms of the dismissal, the matter of costs, are the things usually that are in debate. I think that the right of dismissal is absolutely under the decision of the

Supreme Court in the Skinner case, within the discretion of the court to make terms. A court might even have required us to pay more than the costs as a condition. I would not question that.

The Court: I would question that very seriously.

Mr. Williams: I mean as a practical matter. Whether you could it enforce it I do not know, but it is of minor consequence to us as a practical matter. The important thing to us is this: The Bassick Company has spent over $560,000 in its effort to maintain these patents and thus far successfully. It has got injunctions against, I think, more than forty manufacturers of this equipment. Now, if something has happened here by inadvertence or deliberately, or how, which results in the situation that the Hollingshead Company is free for all time, under these patents, and need not further regard them, then all they have to do is to say to these people who have been enjoined: "We will make ourselves the channel through which this apparatus may be secured and give a cloak of immunity to you because we are immune." It means that the Bassick Company instead of having a monopoly will be in open competition with practically anyone who wants [fol. 409] to make and sell these things. Now, it cannot maintain a profitable business comparable with what it now has with that kind of competition which the Hollingshead Company alone is in a position to permit, should it choose to carry on, so that practically the thing is of enormous importance to the Bassick Company. This case that I am reading goes on to point out that the intention of the court was there as here I think your Honor said several times during the hearing upon this motion to dismiss "I am not deciding the merits of this case. I am deciding whether or not the motion to dismiss may be granted and so on, and the conditions."

The Bernard case held that the petitioning creditors should, despite the order of dismissal, be foreclosed to further prosecute their bankruptcy case, but that they should have a right to proceed further in the prosecution of other suits as creditors in the state courts. What we are asking here is that the failure to incorporate into the order of February 28th a statement that the decision was not upon the merits—it was said off of the record, and we would like to get into the thing that is recorded here something to show that the decision was not upon the

merits and that it was not intended to prejudice the further prosecution of the suit which had been commenced and which had already progressed to a stage where there was an injunction nominally against the Hollingshead Company, and actually under the state of facts that have since developed effective against the very Frank Miller Company that was here, and as it happens in a jurisdiction where these patents have been upheld and as we view it to be applied to stop other defendants from doing precisely the thing that the Hollingshead and Miller Company decided they had a right to do.

I should like to refer to this excerpt from the Bernard case as it is the only one I know of where the facts are the same as this case. "It is within the power of a court to amend its record of a judgment at a subsequent term to prevent injustice through a mistake or inadvertence of the judge or counsel or the clerk, as by correcting the wording of an order of dismissal which by mistake did not conform to the motion on which it was based."

The Court: My dear sir, I do not think you need cite any authorities for that. A court of equity has jurisdiction to correct written contracts for fraud, accident and mistake. That was one of the basic reasons for courts of equity. Now, if there be any mistakes in its own decrees or own orders it seems absurd to state that it is powerless to touch [fol. 410] them. In other words, if the decrees are not proper decrees, and it has no control over them, then instead of an instrumentality of justice it is an instrumentality of oppression. Now, I know of an instance in this very court where the judgment was entered up that the plaintiff recovered so much money, in accordance with the state practice and without saying that it recovered so much money with interest. We had to ultimately, six or eight years afterward, change that record so that it said "Recover that judgment with interest" as the record had to go outside of the state where they were not familiar with our practice, and the court of Appeals said we had a right to make it correspond with proofs and justice.

Mr. Williams: I have a Pennsylvania case to the same effect.

Then it comes to the alternative, if I rightly understand your Honor whether this case shall be continued and argued and decided on the merits, or whether we shall correct the inadvertence—I think it was that—that we

did not get into that order the provision that it was not intended to preclude the plaintiff from further prosecuting the suit formerly commenced.

The Court: I do not think I have your adversary's views about vacating the order and proceeding to decide the case. I have no particular objections to deciding cases.

Mr. Burch: As I understood the suggestion of your Honor it was vacating the order entirely and then proceeding to decide the case on the merits. By merits I mean bill, answer and proof—the entire record.

The Court: Yes, bill, answer and proofs—the entire record.

Mr. Burch: Of course, your Honor, the only thing that this defendant has been after all this time is a decision. The plaintiff needs no decision. It has the defendant under an injunction. It has won the case as long as that interlocutory injunction continues.

The Court: It can get decisions in other jurisdictions and it can have them here.

[fol. 411] Mr. Burch: As I say, the defendant wants a decision. It wanted it when this case was before your Honor and this motion to dismiss was made.

The Court: It may want a decision, but I never got the briefs very promptly. I have forgotten when the briefs were filed. When were they?

Mr. Williams: There were affidavits filed which led to an argument for preliminary injunction last November, and during the course of the day your Honor said, "Cannot we make this a case on final hearing," and everyone agreed to that, except to the condition that they might file some other affidavits and exhibits, which then was done by the defendant—almost every week for I do not know how many months. There was hardly a week we did not get a letter asking if we would agree that they might put this in and stipulate that, or might add that, and I started to write my brief in this thing, I give you my word six or seven times, and every time I got into it there came a letter from Mr. Kalish, stating that they would like to add something else.

The Court: Did not I finally write to counsel in this case that I would decide the case on the record before me if I did not have the briefs?

Mr. Williams: I do not know that. I asked Mr. Ashton to take up with you the day when both parties might file

briefs, and I think that he was in telephone communication with your Honor, or some one, as to when these briefs should be filed and it was agreed that they should be filed on March 5th or 6th. I think it was March 5th that agreement was finally concluded, about two weeks prior to that time which was at the very time that we learned that the Miller Company was identified, and as we think identical with the Hollingshead Company. Learning that, I thought that the thing to do, as long as he had the other suit in that Circuit, was clearly to finish that one and terminate this, and that obviated the need of filing those briefs.

Now, the record had been growing almost week by week every month until the middle of February, and as a matter of fact defendant's counsel on the very day we made our motion to dismiss, which was on February 28th, had pending before your Honor a motion to further complete their record by filing quite a long list of exhibits. After your Honor had entered this order of dismissal, Mr. Kalish [fol. 412] wanted to know whether his motion for leave to file these things might be granted, and your Honor said in effect "The case is terminated, but if you want to file them go ahead and file them," and I do not know whether they were filed or not. So the situation was that at the end of the argument on preliminary injunction it was agreed that the case should be agreed, as submitted at final hearing, subject to the filing of these additional exhibits on both sides, which was then done and carried on, and being carried on up to the day of the dismissal. Some ten days in advance of that time, it had been agreed between counsel that those proofs would be filed on March 5th, which was five or six days after the dismissal. They never were filed.

The Court: Didn't I write Mr. Ashton asking that briefs be filed?

Mr. Ashton: That is correct, your Honor. Mr. Williams asked me to agree with Mr. Fairbank about the time for briefs. After that agreement was reached and before I notified you, you wrote and asked if you were to assume that the case had been withdrawn, and the circumstances why you wrote that has been apparent from what Mr. Williams has stated.

Mr. Burch: Will your Honor indulge us about five minutes? We would like to have a conference with our client.

The Court: Yes.

After Recess

Mr. Williams: May I say this: This suit in Memphis, although the preliminary injunction motion was granted in March of 1927, and the Master's report was made in October of 1927, went on trial at final hearing on April 26th of this year, 1928, and there we devoted three days to the introduction of evidence on both sides, and I do not think that it will be disputed that the evidence there was the identical evidence that would be offered here. At any rate, that record was then complete, and then we started in on the 27th of April to argue that case and there were five counselors there on behalf of the defendant, and the court had opportunity to hear Mr. Burch's partner, and Judge Keable, on behalf of the defendant.

I made an opening argument on behalf of the plaintiff, and we ran until four o'clock Saturday afternoon. That [fol. 413] was three days. Then the court said this was all very interesting, and he wanted every one to have opportunity to be heard, and said that he would set aside the week of May 21st—that is beginning today—to hear the further arguments in that case. Your Honor knows that I endeavored to arrange a week ago Saturday to arrange for a hearing on this motion at a date earlier than today. Therefore, we moved both of us—I guess the defendant's motion got there first—to continue the further arguments in Memphis until the 23rd, which is day after tomorrow, so that case has reached the stage where there has been trial in open court and argument started, and beginning Wednesday of this week for further argument of this case.

Now, supposing that case is decided before this one. Does not that one then become binding on this? Does not that become res judicata, subject to such questions as may arise because of the pendency of appeal, the question whether or not that judgment is final. As long as we are having a race of courts we are going to be in a terrible turmoil, and it was because we thought that was going to be so that when we learned—I started within a day after I got back to Chicago on February 19th, after I learned from Mr. Otis' letter of this identity of these parties—that day we started to move to dismiss this case and had it here on hearing on February 28th, and no one can deny the fact that while these two suits are proceeded against the same

identical party, one in that jurisdiction and one here, that we are going to have trouble. Every time we go there we will be met with what happened here, and every time we come here we will be met with what happened there.

There is the practical difficulty in carrying out your Honor's suggestion, if I apprehend what it is, that we are due now day after tomorrow at Memphis—We can all get there, and Wednesday morning we will be there to complete arguments that have been commenced. Now, if the court there renders a decision this week Saturday or Friday, is that going then to react in turn and be res judicata. I conceive that it would be, and it is not wise that we made the mistake perhaps of starting two suits. The mistake was made because we were ignorant. We did commence the two suits. There was nothing to indicate that they were the same person, but here we find ourselves in the situation where we have two suits in two different jurisdictions on the same patents, and we find out in the middle of February that we have two suits against the same party.

[fol. 414] Now, the wise thing to do is to stay one suit at least, or dismiss it. We are perfectly satisfied to let our remedy flow from one or the other, but we want it to be a decision on the merits. That is the one that was started first, and it happens that the one in which the defendant is and has been under injunction for more than a year, and because the Circuit Court of Appeals has passed on that, that is the one I would prefer to go ahead with. And, of course, there has not been an adjudication by the Third Circuit Court of Appeals and hope springs eternal. I am not surprised that they would prefer to get the case so that this Circuit might get a shot at it, because I do not think their chances are very good there, but I do think with the suggestion that we vacate and then go to a decision here on the merits that it is going to be a case each time we argue the case in either place that some further steps have been taken in the other and is res judicata and binding upon one or the other, and I do not think it is going to be a helpful conclusion of the litigation to be having right on the heels of the trial an argument there and another decision here. But it is the way your Honor suggests and as your Honor says you will like to hear the defendants and they would like five minutes to confer.

The Court: Now before us the Miller Company is the party defendant, isn't it?

Mr. Williams: Yes.

The Court: Now, it is only by looking through the corporate fiction that you see these other defendants?

Mr. Williams: Yes.

The Court: I do not see exactly why the Memphis decision would be embarrassing to us. It would be interesting, just as the decision of any federal court is interesting, and often persuasive.

Mr. Williams: If there is the identity of parties, which is claimed, when the res judicata is set up there, and if there is the identity which we claimed when we made our motion to dismiss here, which we urge as the sole reason for our motion to dismiss here, then through a decision there when it is a decision upon the merits and final everybody I think would have to concede that is not merely interesting as a [fol. 415] matter of comedy or what you please, but it is binding here.

But assume there is this identity——

The Court: The impression does not register in my mind that this case was discontinued because there was another suit pending between the same parties in another jurisdiction.

Mr. Williams: I did not catch that.

The Court: It was not reflected upon my conscience that at the time this suit was discontinued that it was discontinued because there was another suit between the same parties pending in another jurisdiction.

Mr. Williams: That was the sole basis of the motion.

The Court: I did not examine the motion papers. It happened to be a day when I was rather busy.

Mr. Williams: We have a transcript of what happened. I think all that was said could have been said in five or eight minutes.

The Court: I think that this is possibly what happened.

Mr. Williams: If there is any possible question about it I would like to refer your Honor to our affidavits in support of our bill to dismiss.

The Court: Let me read those while counsel on the other side are confering. My recollection as to what occurred was this, that this matter came up on a day when I had a great many people in court in one way or another, and it

seems that counsel in a patent case were present, and I took a recess for five or ten minutes to see what it was all about, and then somebody said that they wanted to dismiss this suit, and somebody said that they did not want it dismissed and being somewhat lazy and knowing that suits were dismissed in other jurisdictions quite readily and feeling that there was an opportunity whereby I would not have to go over a voluminous record and arrive at a decision on the merits, I said "Quite gladly, I will dismiss this," and then some question arose as to whether this Miller concern in Jersey should be sued again and I had a feel-
[fol. 416] ing that they should not be sued again because they had answered this thing. So I struck out the words "without prejudice," and counsel I think protested rather violently against my using the pen so freely and I said "Well, if I cannot strike that out I will proceed to decide it on the merits." With all due deference to you gentlemen, I was not conscience that in doing that I was creating a condition whereby the property rights of tremendous value was passing from one set of people to another set of people. Now, I do not think that counsel before me felt that was tantamount to throwing these patents out of the window. Ordinarily when a patent case is decided by me, I go into it with a good deal of care, and I think that the patent bar will bear me out, and I certainly was not determining this matter as though it was a matter of any considerable extent, but though it was a case where the plaintiff wanted to be rid of it, and I saw no purpose in working over a set of facts in which the complaining party was not interested.

Mr. Williams: There was a transcript of the motion for the preliminary injunction, and I believe a transcript on the motion to dismiss.

Mr. Jones: The court ordered that no transcript be written.

The Court: I took the motion in Judge Rellstab's room and talked to them as frankly as I would to anyone else. It was not a determination.

Mr. Jones: When it was all over, your Honor directed the reporter not to write this up, so no one got any transcript of it.

Mr. Kalish: In connection with the proceedings of February 28th on motion to dismiss, counsel cannot read the court's mind, but we had a very complete record prepared

opposing the motion to dismiss. That motion was not presented, because the court indicated its willingness to sign the decree as changed.

The Court: Exactly. As I said, it seemed to me that this was a time when a patent case, which was a troublesome case, was going to be withdrawn and that the Miller Company were not going to be oppressed again about this suit. Those were the two impressions I had. In other words, that it was a matter I did not have to decide, and [fol. 417] that the defendant was not going to be hurt again on this matter—that is the man who was actually there in court. Now, if the thing looms as a matter of great importance and my decision is to govern and control property rights generally, then I think that the case ought to be finally decided so that it is open to appeal and so that the people know exactly where they stand. I do not care much one way or another, but I think it is one thing to dismiss a suit that the plaintiff does not want to go on with and the defendant is not much hurt by, and it is another thing to dismiss a suit in which property rights go out of the window.

Mr. Burch: Your Honor made a suggestion to defendant and defendant's counsel which in all fairness and propriety should be responded to, and for that matter we have conferred about it. The suggestion, your Honor as I understand was that one way out would be the setting aside entirely of the decree heretofore entered and deciding the case on the merits; that is on the record as now is.

The Court: As now is, and subject to such necessary additions as either party may feel proper to put in in a reasonable length of time.

Mr. Burch: The matter of time is one of great importance to the defendant, as your Honor appreciates the defendant is under an injunction.

The defendant, Frank Miller, by reason of the Memphis injunction of the Hollingshead Company is under an injunction and the hands of both of them are tied. Reference has been made to $3,000,000 involved in this case. I do not know how many millions the Hollingshead Company is losing or how many millions the other side is losing, but it is the disposition of the defendant to meet the suggestion of your Honor, provided that we may get and, of course, I

am getting on a delicate point when I am suggesting an action by the court——

The Court: Provided you may get an early decision.

Mr. Burch: Provided we may get an early decision.

The Court: Let me give you my best suggestion, as to the time of the decision. I am now trying all these funny [fol. 418] criminal cases. I will continue doing that until about the first of June. Now, I have quite a number of patent cases upon my calender, which will take until about the 30th of June. There is no reason why you should not have a decision sometime not later than the middle of July.

Mr. Jones: It rather makes us nervous to wait that long.

The Court: I thought that was probably much more frank than any other federal court would be with you.

Mr. Jones: My understanding of this is briefly that your Honor will vacate the order that has been made as if it never had been made.

The Court: Yes.

Mr. Jones: And that your Honor decide the case upon its merits upon the record as it now stands.

The Court: With such additions as either party may feel proper to put in in a reasonable length of time.

Mr. Jones: And with the additional suggestion that there be an agreement between counsel that the decision in the Tennessee case be held up until your Honor's decision came in.

The Court: I do not know that they will agree to hold up the decision. How could you control the decision in the Tennessee court?

Mr. Burch: If counsel should join in a request to the Tennessee Judge to withhold his decision until your Honor, passes on this case.

Mr. Williams: As to the expedition with which a decision can be had with one court or the other, Judge Anderson said to us on April 28th that he had certain engagements in Knoxville from which he would return last week, and that he expected to decide this case during this present week—rather the case there. Now, quite aside from that he may not do it, of course; but aside from that there is this difficulty that has occurred to me during the five minute recess. The rule and the law are—I think the rule is that the court may at any time correct an error due to [fol. 419] inadvertence and so forth, and I think that the

rule and the law are that the court may not after the term vacate it or amend and so forth. Now, if it be attempted to vacate the order of February 28th, I should suspect that we would be met with the proposition that in so attempting to vacate the court had tried to do something beyond its power and therefore, the order of vacation is a nullity.

The Court: That is just the reason I offered this dilemma to you gentlemen, and it was intended as a dilemma. I would either take the case, or I would let the decree which was entered stand. Now, your adversary would rather have it vacated than let it stand, and you would rather have it amended and let it stand. I am perfectly willing to do one or two things, either take the case on the merits or let the decree that was entered stand.

Mr. Jones: Either of those two suits us.

Mr. Williams: If it may be agreed that the vacation of that order shall be an effective vacation and can be put in such shape that the order of dismissal will not be urged or set up as res judicata.

The Court: How can it be? My order would simply be: "This matter being opened to the court, it is on such and such a day ordered that the decree of dismissal be and the same is hereby vacated, and the case proceed to final hearing."

Mr. Williams: I question the right of the court, except upon the agreement of the parties to do that.

The Court: All right. The order is already entered.

Mr. Williams: You mean the order of dismissal?

The Court: Yes, your order.

Mr. Williams: The order that I am asking for today.

The Court: No, the order that you had entered.

Mr. Williams: Of February 28th.

The Court: Yes, there is nothing before me.

[fol. 420] Mr. Williams: Well, I do not see how I can bind the defendant by agreeing to the vacation.

The Court: All right, if you want to stand please do just where you are.

Mr. Williams: I am willing that the order be entered, except I want to know that it is a real vacation. It seems to me that the defendants will be left in a position where they can go back to Tennessee *an* say "Judge Bodine on May 21st entered an order vacating the order of dismissal," but they will say that was ineffective and of nullity because he had no right to enter it.

The Court: I do not know what the temerity of counsel may be, but I will assume that the lawyer who enters an order over my signature would not have the temerity to go to another court and say that this order was a nullity, but it so happens that I pulled the leg of the funny fellow who sat on the bench up there in Jersey, and now I want to see what a fool he was.

Mr. Williams: In view of that statement, I agree to the vacation and the deciding of the case on the merits.

The Court: Then you gentlemen prepare an order and put your names on it all around.

411

A. V. GULLBORG.

LUBRICATING MEANS.

APPLICATION FILED DEC. 21, 1918.

1,307,734.

Patented June 24, 1919.

Fig. 1

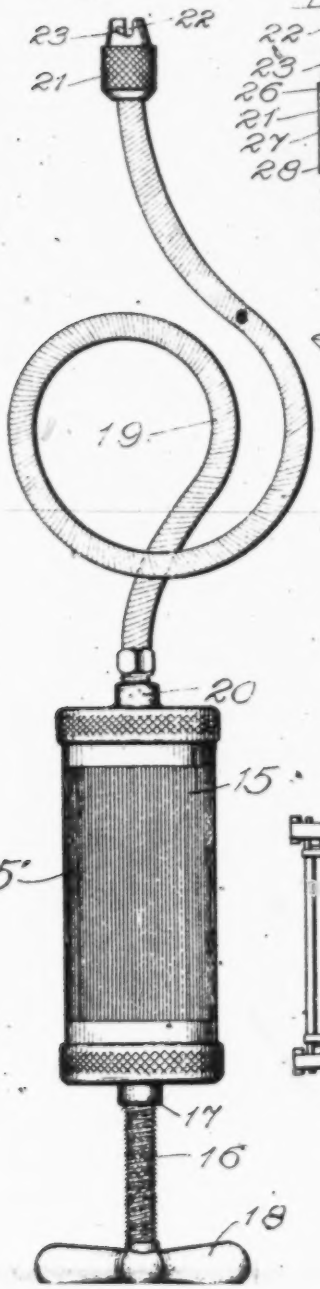

Fig. 2

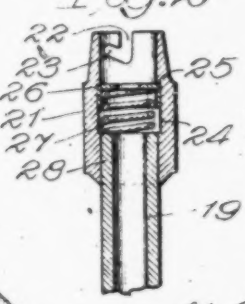

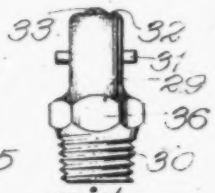

Fig. 3

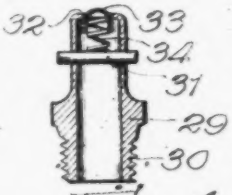

Fig. 4

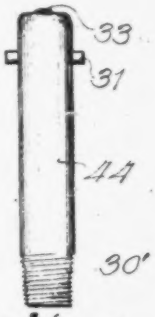

Fig. 9

Fig. 8

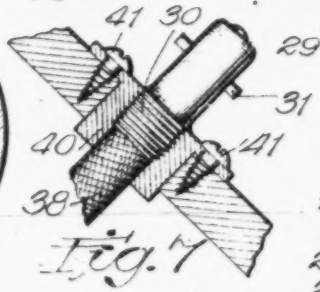

Fig. 7

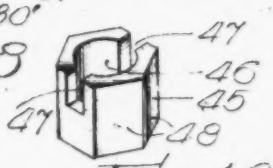

Fig. 10

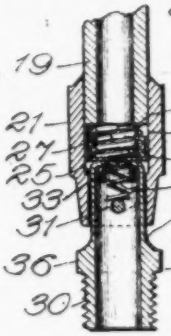

Fig. 5

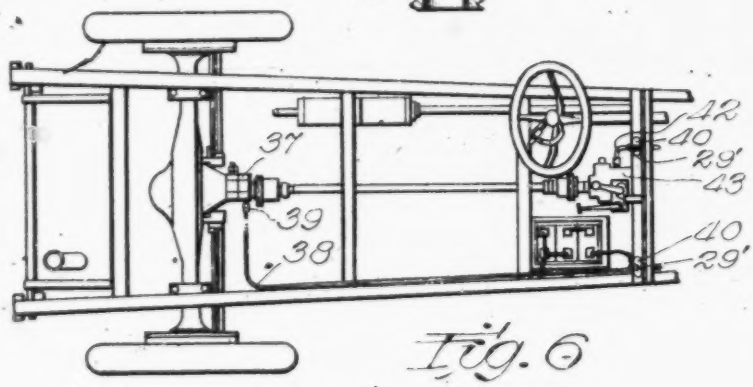

Fig. 6

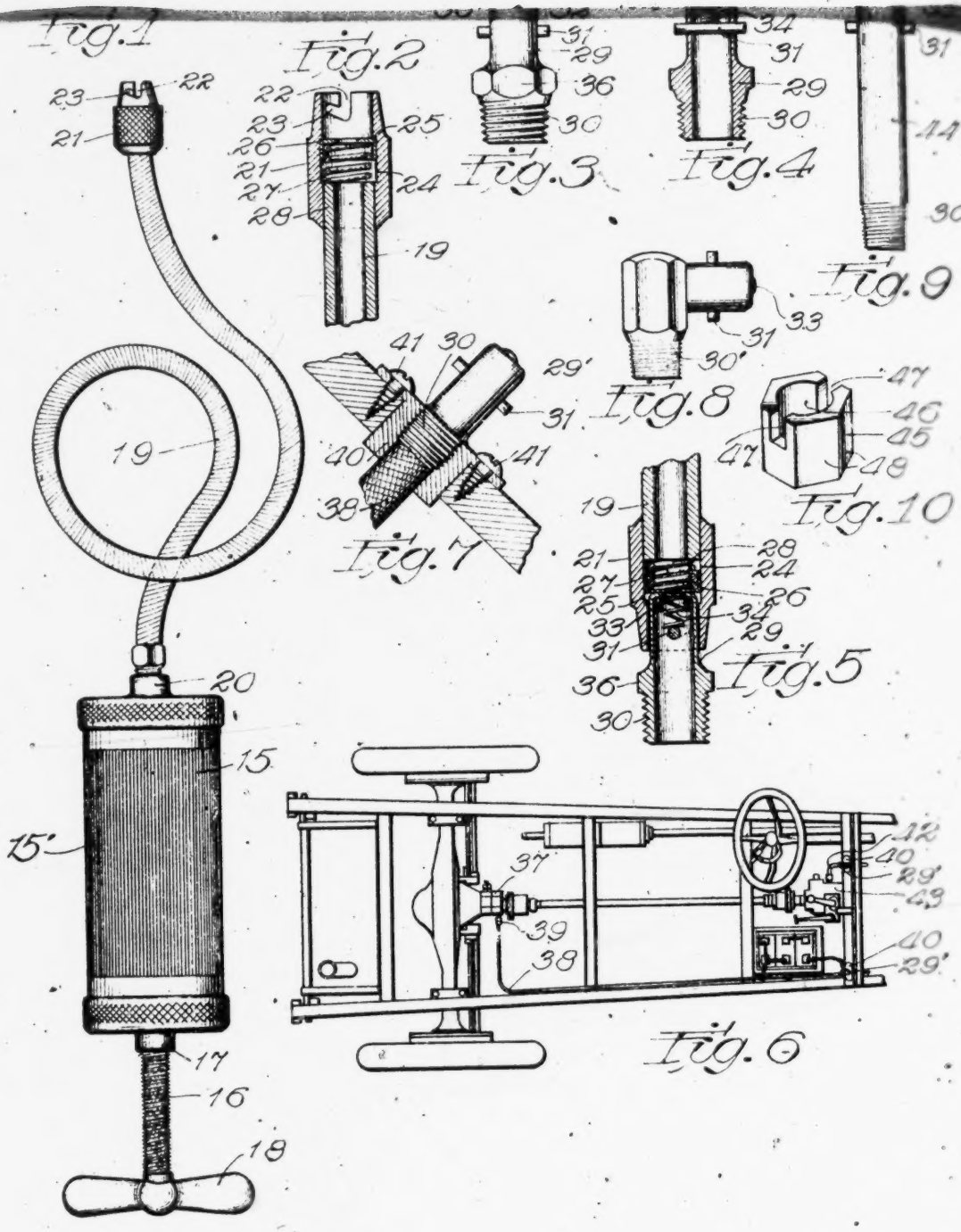

Witnesses:
Lyndrew Wintercorn
Earl H. Price

Inventor
Arthur V. Quillberg
By Williams, Bradbury & Lee
Attys.

UNITED STATES PATENT OFFICE.

ARTHUR V. GULLBORG, OF CHICAGO, ILLINOIS.

LUBRICATING MEANS.

1,307,734. Specification of Letters Patent. Patented June 24, 1919.

Application filed December 21, 1918. Serial No. 267,858.

To all whom it may concern:

Be it known that I, ARTHUR V. GULLBORG, a citizen of the United States, residing at Chicago, in the county of Cook and State of Illinois, have invented a certain new and useful Improvement in Lubricating Means, of which the following is a full, clear, concise, and exact description, reference being had to the accompanying drawing, forming a part of this specification.

My invention relates to lubricating means, and is especially concerned with means for supplying suitable lubricants to parts of machines or apparatus requiring lubrication where these parts are difficult to gain access to, and is further concerned with the provision of apparatus for supplying lubricants under pressure to movable parts, the said means comprising a grease pump or gun provided with means for detachably connecting it with the various parts to be lubricated.

The objects of my invention are:

1st. To provide novel means for supplying a lubricant under pressure to the parts of an apparatus to be lubricated, the said means comprising a grease pump or gun and means for detachably connecting the discharge of said grease pump or gun with the part to be lubricated.

2nd. To provide novel coupling means for connecting the grease gun with the parts to be lubricated; the said coupling means being so constructed that when the coupling members are uncoupled or disconnected from each other there will be no excess lubricant on the outer ends of the coupling members.

3d. To provide novel means for effectively sealing the joint between the coupling members so that the lubricant may be forced between the parts to be lubricated under a very heavy pressure.

4th. To provide novel means whereby lubricant may be supplied to parts to which it is difficult to gain access.

5th. To provide novel coupling members to be permanently secured to the parts to

Fig. 2 is a longitudinal section through the coupling member thereof;

Fig. 3 is a side elevation of one type of coupling member adapted to be secured to the part to be provided with lubricant and co-acting with the coupling member of my grease gun for connecting the discharge outlet of the grease gun with the part to be lubricated;

Fig. 4 is a longitudinal section of the structure shown in Fig. 3;

Fig. 5 is a longitudinal section through the coupling members shown in Figs. 2 and 4, but taken on a plane at right angles to the section plane of Figs. 2 and 4 showing the two coupling members united;

Fig. 6 is a more or less conventional plan view of an automobile with the body thereof removed showing the novel means which I provide for conveying lubricant to parts ordinarily difficult to gain access to, the front portion of the automobile chassis being broken away;

Fig. 7 is a sectional view showing the means for securing my coupling members to the ends of the conduits for conveying lubricant to the parts difficult of access;

Fig. 8 is a side elevation of a modified form of coupling member;

Fig. 9 is a side elevation of a still further modification of my coupling member; and

Fig. 10 is a perspective view of the means which I employ for rotating the coupling members shown in Fig. 9 in either direction to attach it to or detach it from the part to be provided with a lubricant.

Similar characters of reference refer to similar parts throughout the several views.

Referring to the drawings, the reference character 15 indicates the barrel of my improved grease gun or pump which is provided in a wellknown manner with a plunger, not shown, which is reciprocated in the barrel 15 by means of a screwthreaded piston rod 16 which co-acts with a screwthreaded nut 17, the piston 16 being provided with a handle 18. The barrel 15 is provided with

Application filed December 21, 1918. Serial No. 267,858.

To all whom it may concern:

Be it known that I, ARTHUR V. GULLBORG, a citizen of the United States, residing at Chicago, in the county of Cook and State of Illinois, have invented a certain new and useful Improvement in Lubricating Means, of which the following is a full, clear, concise, and exact description, reference being had to the accompanying drawing, forming a part of this specification.

My invention relates to lubricating means, and is especially concerned with means for supplying suitable lubricants to parts of machines or apparatus requiring lubrication where these parts are difficult to gain access to, and is further concerned with the provision of apparatus for supplying lubricants under pressure to movable parts, the said means comprising a grease pump or gun provided with means for detachably connecting it with the various parts to be lubricated.

The objects of my invention are:

1st. To provide novel means for supplying a lubricant under pressure to the parts of an apparatus to be lubricated, the said means comprising a grease pump or gun and means for detachably connecting the discharge of said grease pump or gun with the part to be lubricated.

2nd. To provide novel coupling means for connecting the grease gun with the parts to be lubricated, the said coupling means being so constructed that when the coupling members are uncoupled or disconnected from each other there will be no excess lubricant on the outer ends of the coupling members.

3d. To provide novel means for effectively sealing the joint between the coupling members so that the lubricant may be forced between the parts to be lubricated under a very heavy pressure.

4th. To provide novel means whereby lubricant may be supplied to parts to which it is difficult to gain access.

5th. To provide novel coupling members to be permanently secured to the parts to be lubricated.

6th. To provide novel means to assist in attaching and detaching a tubular coupling member to a part to be lubricated.

Further objects will appear as the description progresses, reference being had to the accompanying drawing in which,

Figure 1 is a side elevation showing my improved grease gun;

Fig. 2 is a longitudinal section through the coupling member thereof;

Fig. 3 is a side elevation of one type of coupling member adapted to be secured to the part to be provided with lubricant and co-acting with the coupling member of my grease gun for connecting the discharge outlet of the grease gun with the part to be lubricated;

Fig. 4 is a longitudinal section of the structure shown in Fig. 3;

Fig. 5 is a longitudinal section through the coupling members shown in Figs. 2 and 4, but taken on a plane at right angles to the section plane of Figs. 2 and 4 showing the two coupling members united;

Fig. 6 is a more or less conventional plan view of an automobile with the body thereof removed showing the novel means which I provide for conveying lubricant to parts ordinarily difficult to gain access to, the front portion of the automobile chassis being broken away;

Fig. 7 is a sectional view showing the means for securing my coupling members to the ends of the conduits for conveying lubricant to the parts difficult of access;

Fig. 8 is a side elevation of a modified form of coupling member;

Fig. 9 is a side elevation of a still further modification of my coupling member; and

Fig. 10 is a perspective view of the means which I employ for rotating the coupling members shown in Fig. 9 in either direction to attach it to or detach it from the part to be provided with a lubricant.

Similar characters of reference refer to similar parts throughout the several views.

Referring to the drawings, the reference character 15 indicates the barrel of my improved grease gun or pump which is provided in a wellknown manner with a plunger, not shown, which is reciprocated in the barrel 15 by means of a screwthreaded piston rod 16 which co-acts with a screwthreaded nut 17, the piston 16 being provided with a handle 18. The barrel 15 is provided with ribs or corrugations 15′ to insure a firm grip of the hand thereon. A flexible conduit 19, of any suitable and wellknown construction, has one end secured to the discharge outlet 20 of my pump and the other end is provided with a hollow coupling member, indicated in general by the reference character 21. The free end of this coupling member, as shown in Fig. 2, is provided with a

bayonet slot 22, the transverse portion 23 of which is inclined from the inner end of the longitudinal portion of the slot toward the outer end of the coupling member for a purpose which will be referred to later on. The bore of the coupling member is enlarged at 24 to provide an annular shoulder 25. A perforated cup leather or sealing disk 26 is slidably mounted in the annular portion 24 of the bore of the coupling and is urged against the shoulder 25 by means of a coiled spring 27, one end of which abuts against the cup leather or sealing disk 26 and the other end of which abuts against the adjacent end 28 of the conduit 19. This end of the conduit may be soldered or secured in any convenient manner to the coupling member.

Referring to Figs. 3 and 4, the reference character 29 indicates as a whole a second coupling member which co-acts with the coupling member just described. This coupling member is in general tubular in form and is provided at one end with screwthreads 30 for securing it to the part to be lubricated. A pin 31 extends through and projects from the opposite sides of the other end of the tubular member. This end of the tubular member is flanged inwardly, as indicated at 32, to form a valve seat with which the hollow capsule shaped valve 33 co-acts. A spring 34 interposed between the pin 31 and the hollow valve 33 urges the latter against the valve seat 32. My purpose in making the valve 33 hollow is, first, to provide sufficient room for the spring 34 without materially increasing the length of the coupling member, and, second, to provide means which will tend to prevent the spring 34 from buckling or flexing longitudinally when the valve 33 is pushed inwardly to admit the lubricant. My invention contemplates the provision of facets 36 to receive the jaws of a wrench whereby the coupling member may be attached to or detached from the parts to be lubricated.

In Fig. 5 I have shown the coupling members 21 and 29 coupled together. In this position it will be noted that the spring 27 is partially compressed and that the sealing disk 26 is displaced from the annular shoulder the coupling member 29. This movement causes an additional small quantity of lubricant to be forced into the coupling member 29. When the coupling member 21 is then turned to permit the pin 31 to slide in the longitudinal portion of the slot 22 the sealing disk 26 is moved toward the end of the coupling member 29 under the pressure of the spring 34. This causes the sealing disk 26 to move toward the outer end of the coupling member 21 and thereby produces a slight vacuum which causes any grease which might otherwise remain on the outer end of the coupling member 29 or the outer side of the valve 33 to be sucked back behind the sealing disk 26, and thereby prevents any excess of lubricant from remaining on the end of the coupling member 29 or on the outside of the valve.

From the above description it will be seen that I have provided means for conveying a lubricant to the part or parts to be lubricated which not only prevents the loss of lubricant, even though the lubricant may be forced between the bearing surfaces under very high pressure, but also prevents the lubricant from remaining upon exposed portions of the coupling members after these have been uncoupled, and subsequently lost. This feature is of importance where, as I will describe later on, the coupling members are located at readily accessible points and where, in case the parts being lubricated form a part of a motor vehicle or other similar structure, the clothes of the operator are likely to come in contact with these coupling members.

Referring to Fig. 6 in which I have disclosed a portion of a motor vehicle with the body thereof removed, the reference character 37 indicates a bearing in the differential casing which is supplied with lubricant by a conduit 38 connected therewith by a suitable hollow coupling 39. The other end of the conduit 38 is brought forwardly in the vehicle and is secured to either the dash or the instrument board, as may be found convenient, by means of a floor socket 40, shown in detail in Fig. 7, which is secured in place by means of the screws 41 and is provided with an internal screwthread for receiving

to provide an annular shoulder 25. A perforated cup leather or sealing disk 26 is slidably mounted in the annular portion 24 of the bore of the coupling and is urged against the shoulder 25 by means of a coiled spring 27, one end of which abuts against the cup leather or sealing disk 26 and the other end of which abuts against the adjacent end 28 of the conduit 19. This end of the conduit may be soldered or secured in any convenient manner to the coupling member.

Referring to Figs. 3 and 4, the reference character 29 indicates as a whole a second coupling member which co-acts with the coupling member just described. This coupling member is in general tubular in form and is provided at one end with screwthreads 30 for securing it to the part to be lubricated. A pin 31 extends through and projects from the opposite sides of the other end of the tubular member. This end of the tubular member is flanged inwardly, as indicated at 32, to form a valve seat with which the hollow capsule shaped valve 33 co-acts. A spring 34 interposed between the pin 31 and the hollow valve 33 urges the latter against the valve seat 32. My purpose in making the valve 33 hollow is, first, to provide sufficient room for the spring 34 without materially increasing the length of the coupling member, and, second, to provide means which will tend to prevent the spring 34 from buckling or flexing longitudinally when the valve 33 is pushed inwardly to admit the lubricant. My invention contemplates the provision of facets 36 to receive the jaws of a wrench whereby the coupling member may be attached to or detached from the parts to be lubricated.

In Fig. 5 I have shown the coupling members 21 and 29 coupled together. In this position it will be noted that the spring 27 is partially compressed and that the sealing disk 26 is displaced from the annular shoulder 25 by the end of the coupling member 29. When the piston of the gun pump is actuated to force lubricant through the conduit 19 under pressure this pressure will cause the sealing disk 26 to seal the joint between the two coupling members and thus prevent any escape of lubricant over the sides of the coupling member 29. On account of the fact that the transverse portion 23 of the bayonet slot in the coupling member 21 is inclined toward the open end of this coupling member it is necessary in order to detach this coupling member from the coupling member 29 to move it toward

ing disk 26 is moved toward the end of the coupling member 29 under the pressure of the spring 34. This causes the sealing disk 26 to move toward the outer end of the coupling member 21 and thereby produces a slight vacuum which causes any grease which might otherwise remain on the outer end of the coupling member 29 or the outer side of the valve 33 to be sucked back behind the sealing disk 26, and thereby prevents any excess of lubricant from remaining on the end of the coupling member 29 or on the outside of the valve.

From the above description it will be seen that I have provided means for conveying a lubricant to the part or parts to be lubricated which not only prevents the loss of lubricant, even though the lubricant may be forced between the bearing surfaces under very high pressure, but also prevents the lubricant from remaining upon exposed portions of the coupling members after these have been uncoupled, and subsequently lost. This feature is of importance where, as I will describe later on, the coupling members are located at readily accessible points and where, in case the parts being lubricated form a part of a motor vehicle or other similar structure, the clothes of the operator are likely to come in contact with these coupling members.

Referring to Fig. 6 in which I have disclosed a portion of a motor vehicle with the body thereof removed, the reference character 37 indicates a bearing in the differential casing which is supplied with lubricant by a conduit 38 connected therewith by a suitable hollow coupling 39. The other end of the conduit 38 is brought forwardly in the vehicle and is secured to either the dash or the instrument board, as may be found convenient, by means of a floor socket 40, shown in detail in Fig. 7, which is secured in place by means of the screws 41 and is provided with an internal screwthread for receiving the screwthreaded portion 30 of a coupling member 29′. This coupling member 29′ is similar to that shown in Figs. 3 and 4, except that it is not provided with the facets 36 for receiving the jaws of a wrench. The forward end of the conduit 38 may be soldered or otherwise secured in the socket 40. The reference character 42 indicates another conduit for conducting oil from the coupling member 29′ to the transmission housing 43.

While I have illustrated means for conducting lubricant to but two portions of this automobile vehicle it is to be under-

stood that conduits similar to 38 and 42 may be used for conducting lubricant to any portion of the vehicle which it is desired to lubricate. Furthermore, this feature of my invention is not to be limited to means for lubricating motor vehicles, but is capable of being used for lubricating any apparatus whether the parts to be lubricated are or are not difficult of access.

In Fig. 8 I have shown a modified form of a coupling member to be secured to a part to be lubricated. This coupling member is L shaped and one end thereof is provided with screwthreads 30′ and the other end thereof being provided with a pin 31 and a spring-pressed valve or closure 33 similar to that described in connection with Figs. 3 and 4. The purpose of this coupling member is to provide means for connecting the coupling member 21 with a part to be lubricated which would otherwise be difficult of access if provided with a straight coupling member such as that shown in Figs. 3 and 4.

In Fig. 9 I have disclosed a still further modification of my coupling member wherein it is formed from a tubular member 44 of substantially constant diameter which is not provided with means for co-acting with a wrench to attach or detach it to the part to be lubricated. In order to thus attach or detach this member I provide the means illustrated in Fig. 10. This means comprises a sleeve-like member 45 having a bore 46 therein for receiving the tubular member 44 and slots 47 for receiving the ends of the pin 31 of the tubular member 44. The member 45 is provided with facets 48 for co-acting with a wrench or other tool for rotating this sleeve.

While I have described the preferred embodiments of my invention it is to be understood that it is capable of other adaptations and modifications within the scope of the appended claims.

Having thus described my invention what I claim as new and desire to secure by Letters Patent of the United States is:

1. The combination with a hollow coupling member having a pin projecting from one side thereof and a spring-pressed closure, of a pump having a flexible conduit connected with the outlet thereof, a second for urging said disk against said first named coupling member.

2. The combination with a hollow coupling member having a pin projecting from one side thereof and a spring-pressed closure, of a pump, a discharge conduit having one end secured to the outlet of said pump, a second hollow coupling member for receiving the closed end of said first named coupling member secured to the other end of said conduit and provided with a bayonet slot adapted to co-act with said pin, a perforated sealing disk mounted to reciprocate in the bore of said coupling member, means for yieldingly urging said sealing disk against the closed end of said first named coupling member, and means for limiting the movement of said sealing disk in the direction of said second coupling member.

3. The combination with a hollow coupling member having a spring-pressed closure, of a pump, a discharge conduit having one end secured to the outlet of said pump, a second hollow coupling member for receiving the closed end of said first named coupling member secured to the other end of said conduit, a perforated sealing disk mounted to reciprocate in the bore of said coupling member, means for yieldingly urging said sealing disk against the closed end of said first named coupling member, and means for limiting the movement of said sealing disk toward said second coupling member.

4. The combination with a hollow coupling member having a spring-pressed closure, of a pump, a discharge conduit having one end secured to the outlet of said pump, a second hollow coupling member for receiving the closed end of said first named coupling member secured to the other end of said conduit, a perforated sealing disk mounted to reciprocate in the bore of said coupling member, and means for yieldingly urging said sealing disk against the closed end of said first named coupling member.

5. The combination with a pump having a flexible conduit connected with the outlet thereof, of a hollow coupling member secured to the other end of said conduit and provided with a bayonet slot, the transverse portion of said slot being inclined from the longitudinal portion thereof

whether the parts to be lubricated are or are not difficult of access.

In Fig. 8 I have shown a modified form of a coupling member to be secured to a part to be lubricated. This coupling member is L shaped and one end thereof is provided with screwthreads 30′ and the other end thereof being provided with a pin 31 and a spring-pressed valve or closure 33 similar to that described in connection with Figs. 3 and 4. The purpose of this coupling member is to provide means for connecting the coupling member 21 with a part to be lubricated which would otherwise be difficult of access if provided with a straight coupling member such as that shown in Figs. 3 and 4.

In Fig. 9 I have disclosed a still further modification of my coupling member wherein it is formed from a tubular member 44 of substantially constant diameter which is not provided with means for co-acting with a wrench to attach or detach it to the part to be lubricated. In order to thus attach or detach this member I provide the means illustrated in Fig. 10. This means comprises a sleeve-like member 45 having a bore 46 therein for receiving the tubular member 44 and slots 47 for receiving the ends of the pin 31 of the tubular member 44. The member 45 is provided with facets 48 for co-acting with a wrench or other tool for rotating this sleeve.

While I have described the preferred embodiments of my invention it is to be understood that it is capable of other adaptations and modifications within the scope of the appended claims.

Having thus described my invention what I claim as new and desire to secure by Letters Patent of the United States is:

1. The combination with a hollow coupling member having a pin projecting from one side thereof and a spring-pressed closure, of a pump having a flexible conduit connected with the outlet thereof, a second hollow coupling member secured to the other end of said conduit for receiving the closed end of said first named coupling member and provided with a bayonet slot for receiving said pin, the transverse portion of said slot being inclined from the longitudinal portion thereof toward the outer end of the coupling member, the bore of said coupling member being enlarged to provide a shoulder, a perforated sealing disk slidably mounted in the enlarged portion of said bore, and a spring confined between the ends of said conduit and said disk pump, a second hollow coupling member for receiving the closed end of said first named coupling member secured to the other end of said conduit and provided with a bayonet slot adapted to co-act with said pin, a perforated sealing disk mounted to reciprocate in the bore of said coupling member, means for yieldingly urging said sealing disk against the closed end of said first named coupling member, and means for limiting the movement of said sealing disk in the direction of said second coupling member.

3. The combination with a hollow coupling member having a spring-pressed closure, of a pump, a discharge conduit having one end secured to the outlet of said pump, a second hollow coupling member for receiving the closed end of said first named coupling member secured to the other end of said conduit, a perforated sealing disk mounted to reciprocate in the bore of said coupling member, means for yieldingly urging said sealing disk against the closed end of said first named coupling member, and means for limiting the movement of said sealing disk toward said second coupling member.

4. The combination with a hollow coupling member having a spring-pressed closure, of a pump, a discharge conduit having one end secured to the outlet of said pump, a second hollow coupling member for receiving the closed end of said first named coupling member secured to the other end of said conduit, a perforated sealing disk mounted to reciprocate in the bore of said coupling member, and means for yielding urging said sealing disk against the closed end of said first named coupling member.

5. The combination with a pump having a flexible conduit connected with the outlet thereof, of a hollow coupling member secured to the other end of said conduit and provided with a bayonet slot, the transverse portion of said slot being inclined from the longitudinal portion thereof toward the outer end of the coupling member, the bore of said coupling member being enlarged to provide a shoulder, a perforated sealing disk slidably mounted in the enlarged portion of said bore, and a spring confined between the ends of said conduit and said disk for urging said disk toward said shoulder.

6. The combination with a pump having a discharge outlet, of a coupling member connected with said discharge outlet and provided with a bayonet slot, the transverse

portion of said slot being inclined from the inner end of the longitudinal portion thereof toward the outer end of said coupling member, a perforated sealing disk slidably mounted in the bore of said coupling member, and means for yieldingly urging said sealing disk toward the outer end of said coupling member, and means for limiting the movement of said sealing disk toward the outer end.

7. The combination with means for supplying lubricant under pressure, said means comprising a discharge outlet, of a coupling member connected with said discharge outlet, a perforated cup leather slidably mounted in said coupling member, and means for yieldingly urging said cup leather toward the outer end of said coupling member.

8. The combination with an apparatus having a part to be lubricated, of a conduit for conducting lubricant to said part, a coupling member secured to the end of said conduit and provided with a spring-pressed valve closure, means for supplying lubricant to said conduit comprising a receptacle provided with a discharge outlet, a second coupling member connected with said discharge outlet, means for detachably uniting said coupling members, and means for sealing the joint between said coupling member and for removing excess lubricant from the adjacent ends thereof when said coupling members are uncoupled.

9. The combination with an apparatus having a part to be lubricated, of a conduit for conducting lubricant to said part, a coupling member secured to the end of said conduit and provided with means for supplying lubricant to said conduit comprising a receptacle provided with a discharge outlet, a second coupling member connected with said discharge outlet, means for detachably uniting said coupling members, and a pliable gasket for sealing the joint between said coupling members.

10. The combination with an apparatus having a part to be lubricated, of a conduit for conducting lubricant to said part, a coupling member secured to the end of said conduit and provided with means for supplying lubricant to said conduit comprising a receptacle provided with a discharge coupling member, means for detachably connecting said members, and means for sealing said connection comprising a gasket positioned between said members and held against one of said members by the pressure of the lubricant.

12. The combination with a bearing provided with a member for receiving lubricant, of means for supplying lubricant thereto comprising a hollow member, means for supplying lubricant to said hollow member under pressure, means for detachably connecting said members, means for sealing said connection comprising a gasket positioned between said members and held against one of said members by the pressure of the lubricant, and a spring for initially positioning said gasket against said member.

13. The combination with a receptacle for receiving lubricant, of means for supplying lubricant to said receptacle comprising a hollow member, means for forcing lubricant into said hollow member under pressure, and means for connecting said hollow member to said receptacle in fluid-tight relation comprising a pliable member positioned in said hollow member and having one face for contacting with said receptacle, the other face of said pliable member being subjected to the pressure of the lubricant in said hollow member.

14. The combination with a grease cup comprising a tubular member having one end flanged inwardly to provide a closure seat, a closure, a pin extending through said tubular member and from both sides thereof, and a spring confined between said pin and closure, and tending to hold said closure on its seat, of a grease pump having a discharge conduit, and means co-acting with the ends of said pin for detachably connecting the discharge end of said conduit with said grease pump.

15. The combination with a grease cup comprising a tubular member having a closure seat, a closure, a pin extending through said tubular member and from both sides thereof, and a spring confined between said pin and closure, and tending to hold said closure on its seat, of a grease pump having a discharge conduit, and means co-acting with the ends of said pin for detachably connecting the discharge end of said conduit

urging said sealing disk toward the outer end of said coupling member, and means for limiting the movement of said sealing disk toward the outer end.

7. The combination with means for supplying lubricant under pressure, said means comprising a discharge outlet, of a coupling member connected with said discharge outlet, a perforated cup leather slidably mounted in said coupling member, and means for yieldingly urging said cup leather toward the outer end of said coupling member.

8. The combination with an apparatus having a part to be lubricated, of a conduit for conducting lubricant to said part, a coupling member secured to the end of said conduit and provided with a spring-pressed valve closure, means for supplying lubricant to said conduit comprising a receptacle provided with a discharge outlet, a second coupling member connected with said discharge outlet, means for detachably uniting said coupling members, and means for sealing the joint between said coupling member and for removing excess lubricant from the adjacent ends thereof when said coupling members are uncoupled.

9. The combination with an apparatus having a part to be lubricated, of a conduit for conducting lubricant to said part, a coupling member secured to the end of said conduit and provided with means for supplying lubricant to said conduit comprising a receptacle provided with a discharge outlet, a second coupling member connected with said discharge outlet, means for detachably uniting said coupling members, and a pliable gasket for sealing the joint between said coupling members.

10. The combination with an apparatus having a part to be lubricated, of a conduit for conducting lubricant to said part, a coupling member secured to the end of said conduit and provided with means for supplying lubricant to said conduit comprising a receptacle provided with a discharge outlet, a second coupling member connected with said discharge outlet, and means for detachably uniting said coupling members and for removing excess lubricant from the adjacent ends thereof when said coupling members are uncoupled.

11. The combination with a bearing provided with a member for receiving lubricant, of means for supplying lubricant thereto comprising a hollow member, means for supplying lubricant to said hollow member under pressure, means for detachably connecting said members, means for sealing said connection comprising a gasket positioned between said members and held against one of said members by the pressure of the lubricant, and a spring for initially positioning said gasket against said member.

13. The combination with a receptacle for receiving lubricant, of means for supplying lubricant to said receptacle comprising a hollow member, means for forcing lubricant into said hollow member under pressure, and means for connecting said hollow member to said receptacle in fluid-tight relation comprising a pliable member positioned in said hollow member and having one face for contacting with said receptacle, the other face of said pliable member being subjected to the pressure of the lubricant in said hollow member.

14. The combination with a grease cup comprising a tubular member having one end flanged inwardly to provide a closure seat, a closure, a pin extending through said tubular member and from both sides thereof, and a spring confined between said pin and closure, and tending to hold said closure on its seat, of a grease pump having a discharge conduit, and means co-acting with the ends of said pin for detachably connecting the discharge end of said conduit with said grease pump.

15. The combination with a grease cup comprising a tubular member having a closure seat, a closure, a pin extending through said tubular member and from both sides thereof, and a spring confined between said pin and closure, and tending to hold said closure on its seat, of a grease pump having a discharge conduit, and means co-acting with the ends of said pin for detachably connecting the discharge end of said conduit with said grease cup.

16. The combination with a grease gun having a discharge conduit, of means for connecting said conduit with a bearing comprising a tubular member, co-acting means on said conduit and said tubular member for detachably connecting said conduit and tubular members, and a flexible member for sealing the joint between said conduit and said tubular member, said flexible member having an aperture for the passage of lu-

bricant from said conduit to said tubular member, a portion of one face of said flexible member being positioned so as to be subjected to any pressure created in said conduit to force it against said tubular member.

17. The combination with means for supplying lubricant under pressure comprising a discharge member, of means for connecting said discharge member to a bearing comprising a tubular member, and means for detachably connecting said members in sealed relation comprising means subjected to the pressure created in said members, the said means being positioned between said members and held against one of said members by said pressure.

18. The combination with a member for receiving lubricant, of means for supplying lubricant thereto under pressure comprising a tubular member, means for detachably connecting said tubular member to said lubricant-receiving member in sealed relation comprising a flexible member provided with an aperture for the passage of lubricant, one face of said member being subjected to the pressure of the lubricant.

In witness whereof, I hereunto subscribe my name this 14th day of December, 1918.

ARTHUR V. GULLBORG.

Witnesses:

JOHN E. CARLSON,

JOHN L. STEFFEN.

DISCLAIMER.

1,307,734.—*Arthur V. Gullborg*, Chicago, Ill. LUBRICATING MEANS. Patent dated June 24, 1919. Disclaimer filed August 29, 1927, by the assignee by mesne assignments, *The Bassick Manufacturing Company.*

Hereby enters this disclaimer to that part of the claims in said specification which is in the following words, to wit:

"12. The combination with a bearing provided with a member for receiving lubricant, of means for supplying lubricant thereto comprising a hollow member, means for supplying lubricant to said hollow member under pressure, means for detachably connecting said members, means for sealing said connection comprising a gasket positioned between said members and held against one of said members by the pressure of the lubricant, and a spring for initially positioning said gasket against said member."

[*Official Gazette September 13, 1927.*]

Dec. 4, 1923. 1,475,980

O. ZERK

LUBRICATING APPARATUS

Original Filed Nov. 21, 1922 2 Sheets-Sheet 1

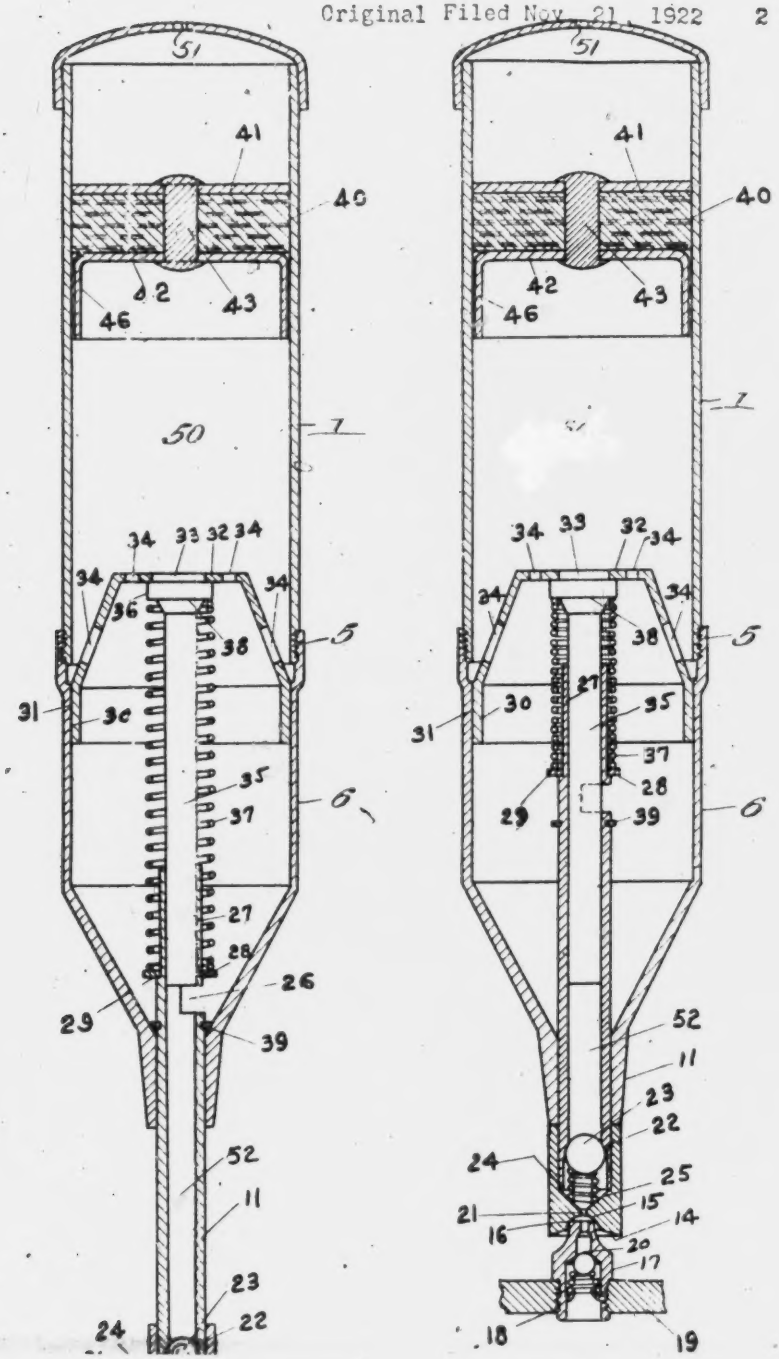

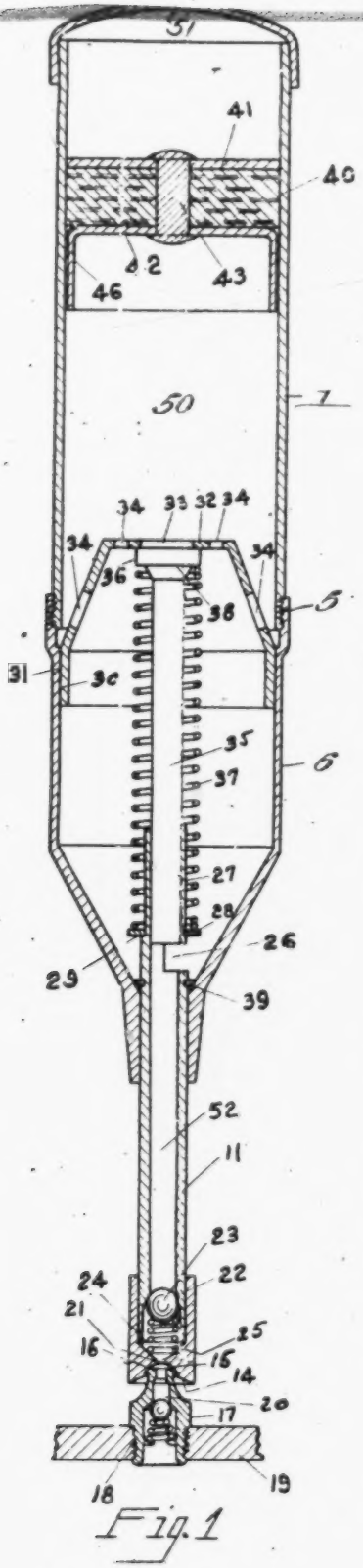

Fig. 1

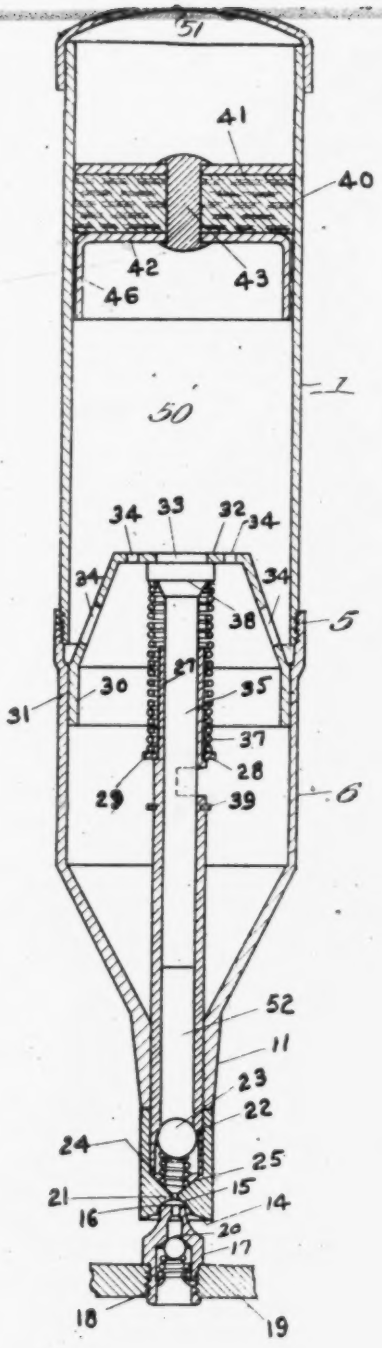

Fig. 2

INVENTOR
OSCAR ZERK
BY Richey Slough & Watts,
HIS ATTORNEYS

Dec. 4, 1923. 1,475,980

O. ZERK

LUBRICATING APPARATUS

Original Filed Nov. 21, 1922 2 Sheets-Sheet 2

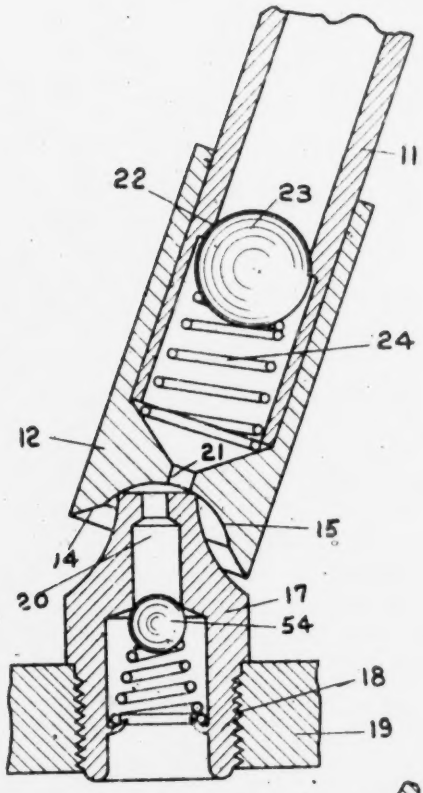

Fig. 3

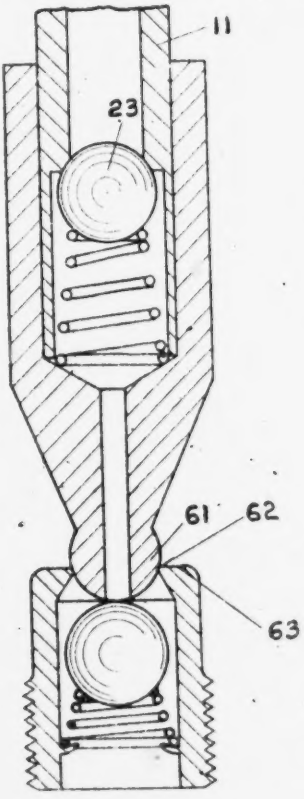

Fig 4

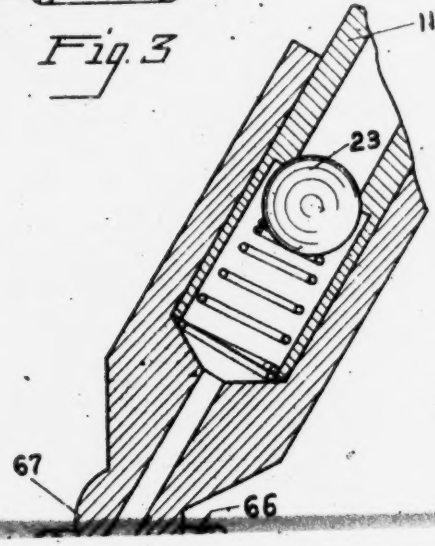

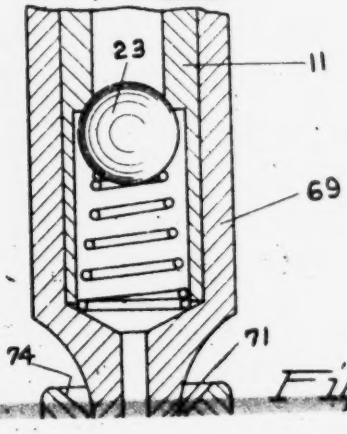

Fig 6

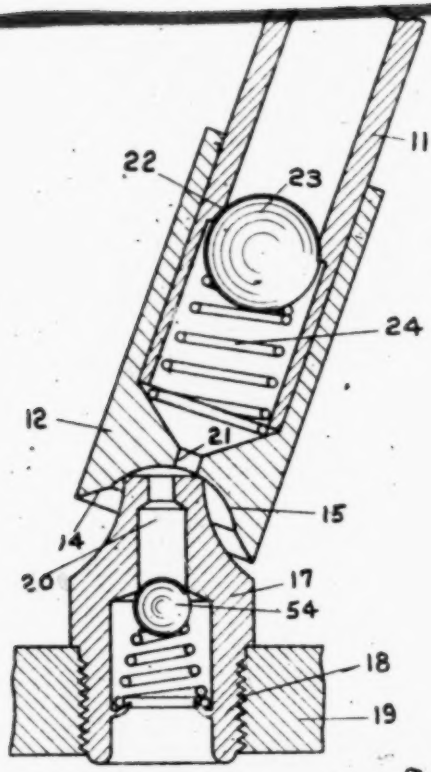

Fig. 3

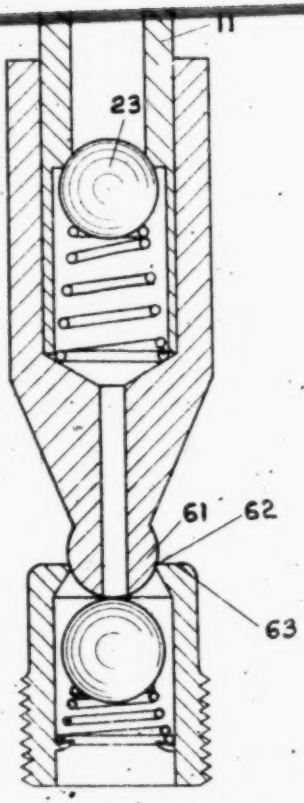

Fig 4

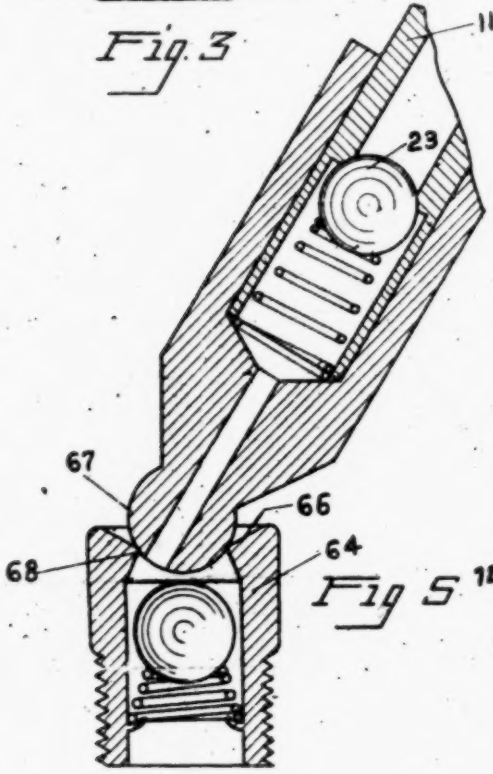

Fig 5

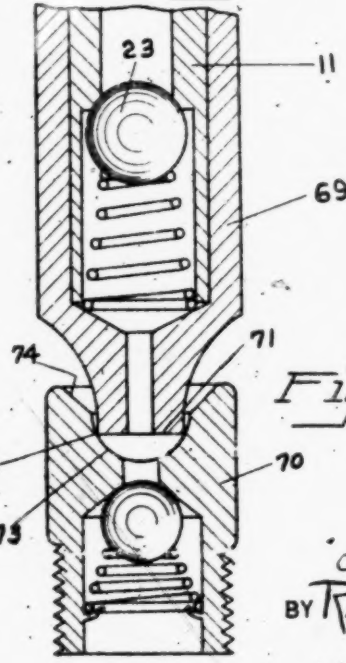

Fig 6

INVENTOR
OSCAR ZERK
BY Richey Slough + Watts
HIS ATTORNEYS

420

Patented Dec. 4, 1923. 1,475,980

UNITED STATES PATENT OFFICE.

OSCAR ZERK, OF CLEVELAND, OHIO, ASSIGNOR TO THE ALLYNE-ZERK COMPANY, OF CLEVELAND, OHIO.

LUBRICATING APPARATUS.

Original application filed November 21, 1922. Serial No. 602,465. Divided and this application filed August 2, 1923. Serial No. 655,294.

To all whom it may concern:

Be it known that I, OSCAR ZERK, a citizen of Republic of Czechoslovakia, residing at Cleveland, in the county of Cuyahoga and State of Ohio, have invented certain new and useful Improvements in Lubricating Apparatus, of which the following is a specification.

My invention relates to improvements in lubricating apparatus.

In the lubrication of moving elements, and especially in automobiles, it has become uniform practice to provide the elements with inlet nipples, to which a grease or oil gun is detachably secured. Generally, the gun is provided with a flexible outlet tube having at its end a coupling which is adjusted manually and locked against the inlet nipple to provide a tight joint therebetween. After the user has locked the coupling by hand, he then grasps the gun barrel with one hand and with the other hand screws the plunger down, forcing the grease through the conduit.

These several operations each require considerable time, are often performed from awkward positions, and further, in handling the coupling, from which grease leaks during the pressure operation and especially after being removed, the user's hands become greasy and dirty causing the gun and the coupling to slip when handled, and necessitating additional time in which to perform the attaching and detaching operations.

The main object of my invention resides in overcoming these objections by so constructing a pistol and a nipple, that the pistol can be held in one hand and placed in direct osculatory, leak proof contact with the nipple, and while so held will inject lubricant into the nipple, when direct pressure and a connector, so that one provides a peripheral circular edge which fits against a spherical surface of the other, to provide a leak proof pressure maintained contact therebetween, which when pressed together in varying angular relations the circular edge remains covered by the dome-shaped portion of the spherically shaped surface within such circular edge.

Another object of my invention resides in the construction of a lubricant dispensing pistol consisting of a barrel having pressure creating means associated therewith, a lubricant exit and a handle portion whereby the user can grasp the pistol by its handle portion with one hand and by direct pressure, form a leak proof connection between the exit and a nipple inlet opening, to allow the lubricant to pass under pressure and without loss from the pistol into the nipple.

Another object of my invention is to provide an improved lubricating system comprising a gun with a lubricant reservoir and a nozzle, the said nozzle having a contact face with a centrally disposed exit opening together with a lubricant receiving nipple with a face having an inlet opening positioned preferably centrally thereof, the one face having a peripheral circular edge and the other face having a spherically shaped surface, and means adapted to eject lubricant under pressure from the said exit opening, the said nozzle contact face being adapted to be pressed against that of the nipple by the operator pressing the gun toward the nipple from any one of a number of different angular directions, the manual pressure so exerted being adapted to cause the ejection of lubricant from the nozzle into the nipple and at the same time to provide sufficient pressure to maintain a tight

Original application filed November 21, 1922. Serial No. 602,465. Divided and this application filed August 2, 1923. Serial No. 655,294.

To all whom it may concern:

Be it known that I, Oscar Zerk, a citizen of Republic of Czechoslovakia, residing at Cleveland, in the county of Cuyahoga and State of Ohio, have invented certain new and useful Improvements in Lubricating Apparatus, of which the following is a specification.

My invention relates to improvements in lubricating apparatus.

In the lubrication of moving elements, and especially in automobiles, it has become uniform practice to provide the elements with inlet nipples, to which a grease or oil gun is detachably secured. Generally, the gun is provided with a flexible outlet tube having at its end a coupling which is adjusted manually and locked against the inlet nipple to provide a tight joint therebetween. After the user has locked the coupling by hand, he then grasps the gun barrel with one hand and with the other hand screws the plunger down, forcing the grease through the conduit.

These several operations each require considerable time, are often performed from awkward positions, and further, in handling the coupling, from which grease leaks during the pressure operation and especially after being removed, the user's hands become greasy and dirty causing the gun and the coupling to slip when handled, and necessitating additional time in which to perform the attaching and detaching operations.

The main object of my invention resides in overcoming these objections by so constructing a pistol and a nipple, that the pistol can be held in one hand and placed in direct osculatory, leak proof contact with the nipple, and while so held will inject lubricant into the nipple, when direct pressure is applied thereto.

Another object of my invention resides in providing a pistol with a metal connector which is so shaped that it forms a leak proof direct metal to metal contact with a nipple.

Another object of my invention resides in constructing the contact portions of the nipple and the connector, so that a leak proof, direct pressure contact can be manually maintained between a surface of the one and an edge of the other.

Another object of my invention is to construct the contacting portions of a nipple and a connector, so that one provides a peripheral circular edge which fits against a spherical surface of the other, to provide a leak proof pressure maintained contact therebetween, which when pressed together in varying angular relations the circular edge remains covered by the dome-shaped portion of the spherically shaped surface within such circular edge.

Another object of my invention resides in the construction of a lubricant dispensing pistol consisting of a barrel having pressure creating means associated therewith, a lubricant exit and a handle portion whereby the user can grasp the pistol by its handle portion with one hand and by direct pressure, form a leak proof connection between the exit and a nipple inlet opening, to allow the lubricant to pass under pressure and without loss from the pistol into the nipple.

Another object of my invention is to provide an improved lubricating system comprising a gun with a lubricant reservoir and a nozzle, the said nozzle having a contact face with a centrally disposed exit opening together with a lubricant receiving nipple with a face having an inlet opening positioned preferably centrally thereof, the one face having a peripheral circular edge and the other face having a spherically shaped surface, and means adapted to eject lubricant under pressure from the said exit opening, the said nozzle contact face being adapted to be pressed against that of the nipple by the operator pressing the gun toward the nipple from any one of a number of different angular directions, the manual pressure so exerted being adapted to cause the ejection of lubricant from the nozzle into the nipple and at the same time to provide sufficient pressure to maintain a tight lubricant proof contact between the circular edge of the one contact face with the spherical surface of the other contact face which engages it.

The invention further resides and consists in the arrangement and combinations of parts hereinafter described and claimed, reference being had to the accompanying drawings wherein—

Fig. 1 is a medial vertical longitudinal sectional view of an embodiment of my invention.

Fig. 2 is a similar longitudinal section of

the same in osculatory manual pressure maintained contact with an improved nipple adapted to cooperate therewith, each of the parts being shown in lubricant discharging position.

Fig. 3 shows an enlarged view of the nozzle and nipple illustrated in Figs. 1 and 2, but the nozzle being presented angularly to the nipple.

Fig. 4 shows another embodiment of my invention comprising a nozzle terminating in a ball having a forward spherical end face together with a nipple adapted to co-operate therewith.

Fig. 5 shows another embodiment of my invention comprising the same kind of nozzle end together with a nipple contact face with a surrounding guide portion, the nozzle being present angularly to the nipple.

Fig. 6 shows another embodiment of my invention wherein the contact faces of the nozzle and nipple as shown in Figs. 1 to 3 inclusive are reversely formed, that of the nipple in this embodiment being similar to that of the nozzle in the first embodiment, and vice versa.

Referring now to all of the drawings, in all of which like parts are indicated by like reference characters;

At 1 I show a cylindrical lubricant containing reservoir, or barrel, having a cover 2 at its rear or breech end. The barrel has its forward or muzzle end threaded externally as shown at 5, and over which threads a head 6 is adapted to be screw-threaded so as to rigidly secure the head 6 to the barrel 1. The head 6 comprises preferably a cylindrical portion 7 and a tapered end 8, together with a bearing portion 9, the bearing portion 9 being of reduced diameter and containing a cylindrical bore 10, which is disposed in axial alignment, preferably, with the reservoir barrel 1.

Within the bore 10 a cylindrical tube 11 is adapted to telescope the external cylindrical walls of the tube making a close fit with the internal cylindrical walls of the bore 10. At the end of the tube 11 a nozzle 12 is rigidly affixed, as by driving the nozzle 12 onto the end of the tube 11, the end of the tube making a tight driving fit [illegible] bearing surfaces to the center of the contact face within the rim 16, and communicating with the nozzle orifice 21 of the gun. The tube 11 has its forward end, fitting within the cylindrical nozzle walls 13, of increased internal diameter, so as to provide a valve seat 22 for a check valve ball 23, spring pressed against such seat by a spiral spring 24, bearing against the valve ball, and seating against the end wall 25 of the nozzle recess.

The tube 11 projects within the head 6 and contains therein a port 26 and a plunger guide portion 27, the said plunger guide portion extending beyond the port 26 toward the interior of the gun. The guide portion 27 carries a washer 28 seated against a shoulder 29 which results from the making of the end of the guide portion 27 of slightly reduced external diameter. A metallic bridge 30 is rigidly secured to the head 6 as by making it a tight driving fit within the portion 31 of the head, or by electrically welding it to such portion, or in any other well known suitable way, and is preferably substantially cup shaped, its bottom wall 32 being perforated at 33 and elsewhere, as shown variously at 34.

At 35 I show a piston plunger comprising a relatively long cylindrical rod and a rear enlarged head or flanged portion 36, the end of the head 36 being adapted to seat on the bottom wall 32 of the bridge 30, the head 36 being of larger diameter than the diameter of the opening 33 through such bottom wall.

A spiral compression spring 37 is disposed between the inner face 38 of the flanged end 36 of the plunger 35 and the washer 29, which is carried upon the guide portion 27 of the telescoping tube 11, the spring 37 serves to exert a separating pressure on the plunger and the tube, so as to tend to keep them in extended positions, as shown in Fig. 1, and to retract them to such positions after a discharging operation, wherein the plunger and the tube have been telescoped to the positions shown in Fig. 2, as will be later described. The tube 11 is maintained in the position shown in Fig. 1 by the pressure of the spring 37, by virtue of a washer 39, which is sprung into place [illegible]

nipple.

Fig. 4 shows another embodiment of my invention comprising a nozzle terminating in a ball having a forward spherical end face together with a nipple adapted to co-operate therewith.

Fig. 5 shows another embodiment of my invention comprising the same kind of nozzle end together with a nipple contact face with a surrounding guide portion, the nozzle being present angularly to the nipple.

Fig. 6 shows another embodiment of my invention wherein the contact faces of the nozzle and nipple as shown in Figs. 1 to 3 inclusive are reversely formed, that of the nipple in this embodiment being similar to that of the nozzle in the first embodiment, and vice versa.

Referring now to all of the drawings, in all of which like parts are indicated by like reference characters;

At 1 I show a cylindrical lubricant containing reservoir, or barrel, having a cover 2 at its rear or breech end. The barrel has its forward or muzzle end threaded externally as shown at 5, and over which threads a head 6 is adapted to be screw-threaded so as to rigidly secure the head 6 to the barrel 1. The head 6 comprises preferably a cylindrical portion 7 and a tapered end 8, together with a bearing portion 9, the bearing portion 9 being of reduced diameter and containing a cylindrical bore 10, which is disposed in axial alignment, preferably, with the reservoir barrel 1.

Within the bore 10 a cylindrical tube 11 is adapted to telescope the external cylindrical walls of the tube making a close fit with the internal cylindrical walls of the bore 10. At the end of the tube 11 a nozzle 12 is rigidly affixed, as by driving the nozzle 12 onto the end of the tube 11, the end of the tube making a tight driving fit within the cylindrical walls 13 of the nozzle.

Now referring first to the particular embodiment of my invention illustrated in Figs. 1, 2 and 3, the nozzle is recessed at its front and rear portions, the rear recess containing the cylindrical walls 13 and the forward recess containing the outer flared guiding walls 14 and a spherical contact face 15.

The spherical contact face 15 is adapted to be engaged by the circular rim 16 of a bearing receiving nipple 17, screw-threaded by its stem 18 into the frame 19 adjacent a machine bearing, the nipple containing a passageway 20 leading from the 23, bearing against the valve ball, and seating against the end wall 25 of the nozzle recess.

The tube 11 projects within the head 6 and contains therein a port 26 and a plunger guide portion 27, the said plunger guide portion extending beyond the port 26 toward the interior of the gun. The guide portion 27 carries a washer 28 seated against a shoulder 29 which results from the making of the end of the guide portion 27 of slightly reduced external diameter. A metallic bridge 30 is rigidly secured to the head 6 as by making it a tight driving fit within the portion 31 of the head, or by electrically welding it to such portion, or in any other well known suitable way, and is preferably substantially cup shaped, its bottom wall 32 being perforated at 33 and elsewhere, as shown variously at 34.

At 35 I show a piston plunger comprising a relatively long cylindrical rod and a rear enlarged head or flanged portion 36, the end of the head 36 being adapted to seat on the bottom wall 32 of the bridge 30, the head 36 being of larger diameter than the diameter of the opening 33 through such bottom wall.

A spiral compression spring 37 is disposed between the inner face 38 of the flanged end 36 of the plunger 35 and the washer 29, which is carried upon the guide portion 27 of the telescoping tube 11, the spring 37 serves to exert a separating pressure on the plunger and the tube, so as to tend to keep them in extended positions, as shown in Fig. 1, and to retract them to such positions after a discharging operation, wherein the plunger and the tube have been telescoped to the positions shown in Fig. 2, as will be later described. The tube 11 is maintained in the position shown in Fig. 1 by the pressure of the spring 37, by virtue of a washer 39, which is sprung into place on the tube 11, being tightly fitted thereto, the tube 11 being slightly ferruled so as to receive such washer, the outer forward edges of the washer contacting with the innermost forward portion of the conical internal walls of the head portion 8.

Within the gun barrel 1, I provide a piston or movable reservoir wall, said piston or movable wall comprising, preferably, an intermediate cork piston 40, and clamping end washers 41 and 42. At 43 I show a clamping rivet, the intermediate portion being of slightly reduced diameter and passing through cylindrical aligned

openings in the cork piston 40 and washers 41 and 42, said openings being preferably axial relative to the bore of the barrel 1, within which bore the piston is adapted to be reciprocated.

The washer 42 is preferably cup-shaped, having cylindrical side walls 46 adapted to loosely fit within the inner walls of the barrel 1 and serving to guide the piston through the bore of the barrel, and to limit any tendency toward tilting, or so-called kipping, of the piston, which, if present, would reduce the freedom of movement otherwise had by the piston within the barrel.

The piston thus described is reciprocable within the barrel 1, but I do not provide any direct means of reciprocating such piston, such as a handle adapted to manually operate the piston, or a spring to propel such piston, nor do I provide means for supplying a positive fluid pressure from a pump or equivalent mechanism, relying, as will be later described, upon the effect of a vacuum, so-called.

Having now described the different parts of the specific embodiment of my invention herein illustrated, I will now describe the operation of the gun when used to dispense a lubricant, such as grease, through a bearing nipple, such as the nipple 17.

Prior to the use of the gun the reservoir chamber 50 is filled with lubricant by dissociating the barrel 1 from the head 6 by unscrewing the head and barrel from one another, the parts being separated at the threads 5, normally joining such parts, for the purpose of loading the barrel. In loading the barrel all of the space comprising the chamber 50 is filled with lubricant, and the piston or movable wall is forced to its rearmost position, wherein the piston end wall or washer 41 comes into contact with the cover 2, the air within the barrel to the rear of the piston being forced out through the orifice 51.

Also, at the same time it is understood that the other interior chambers of the gun, such as the chamber within the head 6 and the bridge 30, and the chamber within the tube 11, have been previously filled with grease or oil. This is preferably done by the manufacturer of the gun, before the gun is put into the hands of a user, this being accomplished by the manufacturer in any suitable way, as by applying grease or oil under pressure to barrel to the rear end of the head 6, and forcing it through the vention without any preliminary non-lubricant discharging operations by the user.

The barrel 1 and the head 6 being thus charged with grease and re-united by the screw threads 5, the operator grasping the gun by the handle 3 will place the spherical contact face 15 of the nozzle in contact with the rim 16 of the nipple 17, the reduced end of the nipple being guided into engagement with such contact face by the flared guide surfaces 14 extending outwardly from the spherical contact face. The operator will then press on the handle forwardly towards the nipple, causing the head 6 to telescope over the tube 11, and at the same time causing the cylindrical plunger 35 to be pressed forwardly within the guide 27 of the tube 11 by the engagement of the bottom wall 32 of the bridge 30 with the rear enlarged face of such plunger. The plunger will, therefore, be advanced forwardly past the port 26 of the tube 11, closing such port and trapping lubricant contained within the tube 11 and, the operation being continued, the plunger 35 forced within the chamber 52 of the tube 11, will displace the lubricant contained within such chamber, forcibly ejecting it under great pressure past the ball valve 23—22, and through the nozzle orifice 21, such discharged lubricant entering the passage 20 of the nipple and past the ball valve 54 of the nipple to the bearing surfaces to be lubricated. A leak proof connection is maintained between the rim or edge 16 of the nipple contact face and the spherical contact face of the nozzle by the manual pressure exerted toward the nipple upon the handle. This is true, even though the angle from which the nozzle is presented to the nipple is varied widely, the nipple circular edge making a tight joint with the nozzle spherical face 15 in all cases, so long as they are pressed together, and when so pressed together complete a closed conduit or passage-way for lubricant under high pressure passing from the gun nozzle to the interior of the nipple. Although I have described my invention in connection with a gun wherein the nozzle is rigidly secured to the reservoir, I may sometimes employ the means of my invention, broadly considered, in a form of gun wherein the nozzle is placed at the end of a flexible tube leading to the gun reservoir.

The very desirable result of securing a manually maintained lubricant leak-proof connection between the nozzle and the nip-

loosely fit within the inner walls of the barrel 1 and serving to guide the piston through the bore of the barrel, and to limit any tendency toward tilting, or so-called kipping, of the piston, which, if present, would reduce the freedom of movement otherwise had by the piston within the barrel.

The piston thus described is reciprocable within the barrel 1, but I do not provide any direct means of reciprocating such piston, such as a handle adapted to manually operate the piston, or a spring to propel such piston, nor do I provide means for supplying a positive fluid pressure from a pump or equivalent mechanism, relying, as will be later described, upon the effect of a vacuum, so-called.

Having now described the different parts of the specific embodiment of my invention herein illustrated, I will now describe the operation of the gun when used to dispense a lubricant, such as grease, through a bearing nipple, such as the nipple 17.

Prior to the use of the gun the reservoir chamber 50 is filled with lubricant by dissociating the barrel 1 from the head 6 by unscrewing the head and barrel from one another, the parts being separated at the threads 5, normally joining such parts, for the purpose of loading the barrel. In loading the barrel all of the space comprising the chamber 50 is filled with lubricant, and the piston or movable wall is forced to its rearmost position, wherein the piston end wall or washer 41 comes into contact with the cover 2, the air within the barrel to the rear of the piston being forced out through the orifice 51.

Also, at the same time it is understood that the other interior chambers of the gun, such as the chamber within the head 6 and the bridge 30, and the chamber within the tube 11, have been previously filled with grease or oil. This is preferably done by the manufacturer of the gun, before the gun is put into the hands of a user, this being accomplished by the manufacturer in any suitable way, as by applying grease or oil under pressure to barrel to the rear end of the head 6, and forcing it through the chamber contained within the head, through the orifices 34 and through the port 26, until the chamber within the tube 11 is also filled, and the lubricant begins to come through the orifice 21 of the nozzle 12. This is not a necessary prerequisite, but is preferred as permitting the instantaneous ready use of the lubricating gun of my invention. The rim 16 of the nipple 17, the reduced end of the nipple being guided into engagement with such contact face by the flared guide surfaces 14 extending outwardly from the spherical contact face. The operator will then press on the handle forwardly towards the nipple, causing the head 6 to telescope over the tube 11, and at the same time causing the cylindrical plunger 35 to be pressed forwardly within the guide 27 of the tube 11 by the engagement of the bottom wall 32 of the bridge 30 with the rear enlarged face of such plunger. The plunger will, therefore, be advanced forwardly past the port 26 of the tube 11, closing such port and trapping lubricant contained within the tube 11 and, the operation being continued, the plunger 35 forced within the chamber 52 of the tube 11, will displace the lubricant contained within such chamber, forcibly ejecting it under great pressure past the ball valve 23—22, and through the nozzle orifice 21, such discharged lubricant entering the passage 20 of the nipple and past the ball valve 54 of the nipple to the bearing surfaces to be lubricated. A leak proof connection is maintained between the rim or edge 16 of the nipple contact face and the spherical contact face of the nozzle by the manual pressure exerted toward the nipple upon the handle. This is true, even though the angle from which the nozzle is presented to the nipple is varied widely, the nipple circular edge making a tight joint with the nozzle spherical face 15 in all cases, so long as they are pressed together, and when so pressed together complete a closed conduit or passage-way for lubricant under high pressure passing from the gun nozzle to the interior of the nipple. Although I have described my invention in connection with a gun wherein the nozzle is rigidly secured to the reservoir, I may sometimes employ the means of my invention, broadly considered, in a form of gun wherein the nozzle is placed at the end of a flexible tube leading to the gun reservoir.

The very desirable result of securing a manually maintained lubricant leak-proof connection between the nozzle and the nipple even when the gun is pressed from different angular directions toward the nipple, is very valuable as when the gun is used to lubricate nipples such as those herein illustrated placed adjacent the surfaces of machine bearings on an automobile where the space is oftentimes limited in which the gun can be operated, and intervening portions

of the automobile prevent direct axial alignment of the gun and nipple, or, at any rate, make it awkward to so position the gun relative to the nipple. In my present invention I secure this result and at the same time utilize the connection creating pressure to force lubricant from the gun through the leak-proof joint thus secured by pressure and I secure the ejection of the lubricant under a very high pressure at the same time, and with the same manual effort as the tight leak-proof connection is secured. I thus have provided a one-hand lubricant gun capable of being used for oil or grease or other lubricant, or for any liquid or fluid substance sought to be ejected from a reservoir to a receptacle which may comprise an inlet nipple.

Referring now particularly to Fig. 3 of the drawings, in this figure the nozzle is shown as being presented at an angle to the axis of the nipple and a leak-proof connection is shown as being secured between the peripheral edge of the contact face of the nipple and the spherical concave face of the nozzle, to form a closed leak-proof passageway between the end closed nozzle orifice and the nipple orifice. By comparing the relation of the parts as indicated in Fig. 3, with the same parts as shown in Figs. 1 and 2, it will be seen that the same kind of a connection is secured and the lubricant may be ejected from the nozzle to the nipple in the same way by manual pressure exerted against the gun towards the nipple.

In Fig. 4 I show a modified form of nozzle end and nipple wherein the nozzle instead of having a concave contact face, spherically formed, terminates in a ball 61, having its forward portion convex spherically formed, the convexly rounded end of the nozzle fitting within the circular inner rim 62 of a nipple annular contact face 63, and making a leak-proof connection between the circular rim of the nipple contact face, and the convexly rounded contact face of the nozzle.

Fig. 5 shows another view of a similar nozzle and nipple to that illustrated in Fig. 4 modified, however, in that the nipple 64 is shown as comprising an outwardly flaring guide portion 66 like, in this respect, to the nozzles of Figs. 1 to 3 inclusive, and like them serving to guide the face 67 of the nozzle to the apertured contact edge 68 of

of my invention wherein the nozzle and nipple contact faces are reversely formed from those shown in Figs. 1 to 3 inclusive, the nozzle 69 having a flat contact face 71 with a circular knife edge rim and the nipple 70 having a concave face 73 spherically formed and adapted to receive the nozzle end, and the parts being guided to lubricant dispensing leak proof connecting position by an outwardly flared guiding surface 74 surrounding the concave contact face of the nipple.

Having described my invention in connection with a particular kind of lubricant dispensing gun, I am aware that my improved nozzle and nipple connection may be embodied in structures varying widely from that herein illustrated and described, and when used in connection with a gun such as a lubricant gun, the construction of the gun may likewise be varied. In my co-pending application Serial No. 602,465, filed November 21, 1922, likewise I show a different form of gun and a number of different kinds of nozzles and nipples embodying the principles of my invention, and in my co-pending application Serial No. 602,466 filed November 21, 1922, I show still another form of gun together with a nozzle and nipple used in connection therewith employing the principles of my invention. I elect to claim in this application my invention comprising a nozzle and a nipple and the parts associated therewith broadly, and to claim herein more specifically that construction of nozzle and nipple wherein the nozzle has a concave contact face adapted to receive the nipple end, and to claim in other co-pending applications other forms of apparatus embodying the broad principles of my invention herein disclosed.

After a charge of lubricant of a volume at least equal to the volume of space occupied by the plunger piston 35, disposed forwardly of the port 26, has been discharged from the gun, the operator will release the forwardly direct pressure on the handle and the spring 37, which, during such operation, was pressed as shown in Fig. 2, will cause the piston and nozzle to regain their normal extended positions, as shown in Fig. 1, the spring 37 being strong enough to accomplish this over the power of a so-called vacuum created in the chamber 52 when the plunger 35 is removed therefrom, and the

thus utilize the connection creating pressure to force lubricant from the gun through the leak-proof joint thus secured by pressure and I secure the ejection of the lubricant under a very high pressure at the same time, and with the same manual effort as the tight leak-proof connection is secured. I thus have provided a one-hand lubricant gun capable of being used for oil or grease or other lubricant, or for any liquid or fluid substance sought to be ejected from a reservoir to a receptacle which may comprise an inlet nipple.

Referring now particularly to Fig. 3 of the drawings, in this figure the nozzle is shown as being presented at an angle to the axis of the nipple and a leak-proof connection is shown as being secured between the peripheral edge of the contact face of the nipple and the spherical concave face of the nozzle, to form a closed leak-proof passageway between the end closed nozzle orifice and the nipple orifice. By comparing the relation of the parts as indicated in Fig. 3, with the same parts as shown in Figs. 1 and 2, it will be seen that the same kind of a connection is secured and the lubricant may be ejected from the nozzle to the nipple in the same way by manual pressure exerted against the gun towards the nipple.

In Fig. 4 I show a modified form of nozzle end and nipple wherein the nozzle instead of having a concave contact face, spherically formed, terminates in a ball 61, having its forward portion convex spherically formed, the convexly rounded end of the nozzle fitting within the circular inner rim 62 of a nipple annular contact face 63, and making a leak-proof connection between the circular rim of the nipple contact face, and the convexly rounded contact face of the nozzle.

Fig. 5 shows another view of a similar nozzle and nipple to that illustrated in Fig. 4 modified, however, in that the nipple 64 is shown as comprising an outwardly flaring guide portion 66 like, in this respect, to the nozzles of Figs. 1 to 3 inclusive, and like them serving to guide the face 67 of the nozzle to the apertured contact edge 68 of the nipple. Also in this figure, the nozzle is presented against the nipple from a different angular direction than in axial alignment therewith, but serving to maintain, just as when in axial alignment, a tight lubricant proof connection between the nozzle and the nipple when pressure is directed by the user to force the gun against the nozzle.

In Fig. 6 I show another embodiment of the nipple 70 having a concave face 73 spherically formed and adapted to receive the nozzle end, and the parts being guided to lubricant dispensing leak proof connecting position by an outwardly flared guiding surface 74 surrounding the concave contact face of the nipple.

Having described my invention in connection with a particular kind of lubricant dispensing gun, I am aware that my improved nozzle and nipple connection may be embodied in structures varying widely from that herein illustrated and described, and when used in connection with a gun such as a lubricant gun, the construction of the gun may likewise be varied. In my co-pending application Serial No. 602,465, filed November 21, 1922, likewise I show a different form of gun and a number of different kinds of nozzles and nipples embodying the principles of my invention, and in my co-pending application Serial No. 602,466 filed November 21, 1922, I show still another form of gun together with a nozzle and nipple used in connection therewith employing the principles of my invention. I elect to claim in this application my invention comprising a nozzle and a nipple and the parts associated therewith broadly, and to claim herein more specifically that construction of nozzle and nipple wherein the nozzle has a concave contact face adapted to receive the nipple end, and to claim in other co-pending applications other forms of apparatus embodying the broad principles of my invention herein disclosed.

After a charge of lubricant of a volume at least equal to the volume of space occupied by the plunger piston 35, disposed forwardly of the port 26, has been discharged from the gun, the operator will release the forwardly direct pressure on the handle and the spring 37, which, during such operation, was pressed as shown in Fig. 2, will cause the piston and nozzle to regain their normal extended positions, as shown in Fig. 1, the spring 37 being strong enough to accomplish this over the power of a so-called vacuum created in the chamber 52 when the plunger 35 is removed therefrom, and the ball valve 22 and 23 during such removal being tightly closed.

At the moment the port 26 is again uncovered by the retractile action of the spring 37 upon the piston 35 the power of this vacuum will be communicated to the grease within the head 6, and which body of lubricant is continuous through the openings 34 of the bridge 30 through the chamber 50 of the barrel 1 to the piston comprising

the parts 40, 41 and 42, and the entire body of lubricant will be drawn forwardly, together with the large piston follower or so-called movable wall 40—41—42, and the tube 11 will be immediately recharged with lubricant.

Although I have described the foregoing operation whereby the lubricant together with the follower or movable wall is drawn forwardly in the barrel 1 after a discharging operation, by referring to the so-called vacuum as drawing the lubricant and piston forward so that a new charge of lubricant is drawn into the chamber 52 for a subsequent discharging operation of the gun as described, I believe that another way of describing the operation relative to the recharging of the chamber 52 would be to state that lubricant together with the piston follower or movable wall is pressed forward by atmospheric pressure acting on its rear side, as through the opening 51, this atmospheric pressure being in excess of the hydraulic pressure existing on the forward portion of the lubricant when the piston 35 has been withdrawn from the chamber 52, such withdrawal causing a consequent reduction in hydraulic pressure on the forward side of the said lubricant.

But in any event I find that the said follower always is in contact with the body of lubricant ahead of it, and the lubricant is forced forwardly into the chamber 52 after every discharge operation, as described.

By referring now to the different embodiments of my invention illustrated, it will be observed that the lubricant conducting connection between the lubricant gun nozzle and the element to be lubricated comprises a contact face for the nozzle and a contact face for the element, the two contact faces being adapted to be pressed together such as by manual pressure directed from the gun toward the element, one of the said contact-faces having a spherical surface, and the other contact face comprising an edge which is circular and is preferably very narrow, to form a very thin annular surface against which the spherical surface is pressed. In the different figures of drawing I have shown this very narrow annular surface as being formed on substantially the same radius of curvature as that of the said spheri- forming a part hereof, that I used it in the sense of its being circular or substantially so, or so as to accomplish the same results as a circular face edge, in substantially the same way.

I find that by so forming the contacting portions of the nozzle and the element to be lubricated, that a great sealing pressure can be exerted between the contacting portions of the nozzle and the element in excess of the hydraulic pressure exerted by the lubricant enclosed by such portions so as to effectually retain the lubricant in the passageway thus formed, and I find that this can be most effectually accomplished by the novel means I have herein provided, and which comprise generally the contacting faces I have herein described.

My invention contemplates, moreover, the provision of contact faces for a lubricant gun nozzle, and a lubricant receiving element which have their engaging portions formed of hard material such as metal, and I prefer to use steel for the material having such surfaces, as by the use of such hard material, I secure a permanence of the contact surfaces which cannot otherwise be secured due to the durability of the material and I secure an increased degree of efficiency since the contacting portions are unyielding as would be the case were they formed of rubber or like material.

By the construction of a temporary joint between the gun nozzle and lubricant receptacle, as has been described, the end of the nozzle is adapted to be fitted to the contact face of the receptacle and to make a pressure maintained, substantially line contact therewith without forcing dirt which may accumulate on the exterior of the receptacle, into the interior passages thereof and making a lubricant proof joint, the preferable metal-to-metal contact substantially on a circular line causing a cutting through of the accumulated dirt.

Also especially in those forms of my invention having a very small inlet opening leading into the interior of the receptacle the liability of any considerable amount of dirt being forced into the receptacle is minimized. By providing such a metal-to-metal joint between the nozzle and the nipple, such dirt will be excluded from the joint which is not the case where a pressure joint is estab-

Although I have described the foregoing operation whereby the lubricant together with the follower or movable wall is drawn forwardly in the barrel 1 after a discharging operation, by referring to the so-called vacuum as drawing the lubricant and piston forward so that a new charge of lubricant is drawn into the chamber 52 for a subsequent discharging operation of the gun as described, I believe that another way of describing the operation relative to the recharging of the chamber 52 would be to state that lubricant together with the piston follower or movable wall is pressed forward by atmospheric pressure acting on its rear side, as through the opening 51, this atmospheric pressure being in excess of the hydraulic pressure existing on the forward portion of the lubricant when the piston 35 has been withdrawn from the chamber 52, such withdrawal causing a consequent reduction in hydraulic pressure on the forward side of the said lubricant.

But in any event I find that the said follower always is in contact with the body of lubricant ahead of it, and the lubricant is forced forwardly into the chamber 52 after every discharge operation, as described.

By referring now to the different embodiments of my invention illustrated, it will be observed that the lubricant conducting connection between the lubricant gun nozzle and the element to be lubricated comprises a contact face for the nozzle and a contact face for the element, the two contact faces being adapted to be pressed together such as by manual pressure directed from the gun toward the element, one of the said contact-faces having a spherical surface, and the other contact face comprising an edge which is circular and is preferably very narrow, to form a very thin annular surface against which the spherical surface is pressed. In the different figures of drawing I have shown this very narrow annular surface as being formed on substantially the same radius of curvature as that of the said spherical surface, but the area of the annular contact surface in all cases where the annular surface or so-called edge, is placed on the nozzle or on the element to be lubricated, is of reduced area so as to intensify the lubricant sealing pressure exerted against such reduced surface.

I wish it to be understood also that where I have used the term "annular" in the claims and accompanying this specification and portions of the nozzle and be lubricated, that a great sealing pressure can be exerted between the contacting portions of the nozzle and the element in excess of the hydraulic pressure exerted by the lubricant enclosed by such portions so as to effectually retain the lubricant in the passageway thus formed, and I find that this can be most effectually accomplished by the novel means I have herein provided, and which comprise generally the contacting faces I have herein described.

My invention contemplates, moreover, the provision of contact faces for a lubricant gun nozzle, and a lubricant receiving element which have their engaging portions formed of hard material such as metal, and I prefer to use steel for the material having such surfaces, as by the use of such hard material, I secure a permanence of the contact surfaces which cannot otherwise be secured due to the durability of the material and I secure an increased degree of efficiency since the contacting portions are unyielding as would be the case were they formed of rubber or like material.

By the construction of a temporary joint between the gun nozzle and lubricant receptacle, as has been described, the end of the nozzle is adapted to be fitted to the contact face of the receptacle and to make a pressure maintained, substantially line contact therewith without forcing dirt which may accumulate on the exterior of the receptacle, into the interior passages thereof and making a lubricant proof joint, the preferable metal-to-metal contact substantially on a circular line causing a cutting through of the accumulated dirt.

Also especially in those forms of my invention having a very small inlet opening leading into the interior of the receptacle the liability of any considerable amount of dirt being forced into the receptacle is minimized. By providing such a metal-to-metal joint between the nozzle and the nipple, such dirt will be excluded from the joint which is not the case where a pressure joint is established between contacting portions of rubber or other gasket material.

This case is a division as to the subject matter claimed herein, of an earlier application, Serial Number 602,465, filed November 21, 1922.

Having thus described my invention in a number of embodiments, I am aware that numerous and extensive departures may be made from the embodiments herein illus-

trated, described and referred to, but without departing from the spirit of my invention.

I claim:—

1. In a lubricating apparatus, the combination with a lubricant receptacle element of a lubricant reservoir for supplying lubricant thereto, means to put the lubricant in the reservoir under pressure, a lubricant feeding nozzle element, said reservoir communicating lubricant under pressure thereto, said receptacle element and said nozzle element having cooperative substantially non-compressible contact faces and openings therethrough, one of said contact faces having a concavely spherical surface, the other contact face having a dirt cutting circumferential edge portion adapted to be embraced within the spherical surface of the other face and providing a solid contact therewith when the nozzle is pressed against the receptacle element from any one of a plurality of angularly different directions, to make a sealed, substantially non-yielding, lubricant conducting, connection between the face openings.

2. In a lubricating apparatus, the combination with a lubricant receptacle element of a lubricant reservoir for supplying lubricant thereto, means to put the lubricant in the reservoir under pressure, a lubricant feeding nozzle element, said reservoir communicating lubricant under pressure thereto, said receptacle element and said nozzle element having cooperative substantially non-compressible contact faces and openings therethrough, the nozzle contact face having a concavely spherical surface, the other contact face having a dirt cutting circumferential edge portion adapted to be embraced within the spherical surface of the nozzle face and providing the sole contact therewith when the nozzle is pressed against the receptacle element from any one of a plurality of angularly different directions, to make a sealed, substantially non-yielding, lubricant conducting connection between the face openings.

3. In a lubricating apparatus, the combination with a lubricant receptacle element of a lubricant gun for supplying lubricant rality of angularly different directions, to make a sealed, substantially non-yielding lubricant conducting connection between the face openings, and an outwardly inclined guide for one of said elements to direct the other element contact face portion thereto.

4. In a lubricating system, the combination with a lubricant dispensing gun having a lubricant feeding nozzle, of a lubricant receiving element, said gun comprising means to supply lubricant under pressure to said element, the nozzle and said element having cooperating substantially non-compressible contact faces with communicating openings therethrough, one of said contact faces having a spherical surface, and the other contact face comprising an annular dirt cutting edge portion adapted to fit entirely within the border of the spherical surface of the other face and to swivel thereagainst forming a tight connection between said openings for the conduction of lubricant under pressure from said gun to the receiving element when said nozzle face is pressed against the said element from any one of a plurality of angularly different directions, after their faces are placed in contacting engagement.

5. In a lubricating apparatus, the combination with a lubricant receptacle of a lubricant gun comprising a container and a rigid lubricant feeding nozzle secured directly thereto, said receptacle and said gun nozzle having cooperative substantially non-compressible contact faces and openings therethrough, the nozzle contact face having a concavely spherical surface, the receptacle contact face adapted to be received within and to engage the concave spherical surface of the nozzle face and having a dirt-cutting circumferential edge portion providing the sole contact therewith, when the gun is directed against the receptacle and manual pressure exerted against the container from any one of a plurality of angularly different directions, to make and manually maintain a sealed, substantially non-yielding, lubricant conducting swiveling connection between the face openings.

6. In a lubricating system, the combination with a lubricant dispensing gun having a lubricant feeding nozzle, of a lubricant

the reservoir under pressure, a lubricant feeding nozzle element, said reservoir communicating lubricant under pressure thereto, said receptacle element and said nozzle element having cooperative substantially non-compressible contact faces and openings therethrough, one of said contact faces having a concavely spherical surface, the other contact face having a dirt cutting circumferential edge portion adapted to be embraced within the spherical surface of the other face and providing a solid contact therewith when the nozzle is pressed against the receptacle element from any one of a plurality of angularly different directions, to make a sealed, substantially non-yielding, lubricant conducting, connection between the face openings.

2. In a lubricating apparatus, the combination with a lubricant receptacle element of a lubricant reservoir for supplying lubricant thereto, means to put the lubricant in the reservoir under pressure, a lubricant feeding nozzle element, said reservoir communicating lubricant under pressure thereto, said receptacle element and said nozzle element having cooperative substantially non-compressible contact faces and openings therethrough, the nozzle contact face having a concavely spherical surface, the other contact face having a dirt cutting circumferential edge portion adapted to be embraced within the spherical surface of the nozzle face and providing the sole contact therewith when the nozzle is pressed against the receptacle element from any one of a plurality of angularly different directions, to make a sealed, substantially non-yielding, lubricant conducting connection between the face openings.

3. In a lubricating apparatus, the combination with a lubricant receptacle element of a lubricant gun for supplying lubricant under pressure thereto, said gun having a lubricant feeding nozzle element, said receptacle element and said nozzle element having cooperative substantially non-compressible contact faces and openings therethrough, one of said contact faces having a concavely spherical surface, the other contact face having a dirt cutting circumferential edge portion adapted to be embraced within the spherical surface of the other face and providing the sole contact therewith when the nozzle is pressed against the receptacle element from any one of a plurality of angularly different directions, to make a sealed, substantially non-yielding, lubricant conducting connection between the face openings.

4. In a lubricating apparatus, the combination with a lubricant dispensing gun having a lubricant feeding nozzle, of a lubricant receiving element, said gun comprising means to supply lubricant under pressure to said element, the nozzle and said element having cooperating substantially non-compressible contact faces with communicating openings therethrough, one of said contact faces having a spherical surface, and the other contact face comprising an annular dirt cutting edge portion adapted to fit entirely within the border of the spherical surface of the other face and to swivel thereagainst forming a tight connection between said openings for the conduction of lubricant under pressure from said gun to the receiving element when said nozzle face is pressed against the said element from any one of a plurality of angularly different directions, after their faces are placed in contacting engagement.

5. In a lubricating apparatus, the combination with a lubricant receptacle of a lubricant gun comprising a container and a rigid lubricant feeding nozzle secured directly thereto, said receptacle and said gun nozzle having cooperative substantially non-compressible contact faces and openings therethrough, the nozzle contact face having a concavely spherical surface, the receptacle contact face adapted to be received within and to engage the concave spherical surface of the nozzle face and having a dirt-cutting circumferential edge portion providing the sole contact therewith, when the gun is directed against the receptacle and manual pressure exerted against the container from any one of a plurality of angularly different directions, to make and manually maintain a sealed, substantially non-yielding, lubricant conducting swiveling connection between the face openings.

6. In a lubricating system, the combination with a lubricant dispensing gun having a lubricant feeding nozzle, of a lubricant receiving element, said gun comprising means to supply lubricant under pressure to said element, the nozzle and said element having cooperating substantially non-compressible contact faces with communicating openings therethrough, one of said contact faces having a spherical surface, and the other contact face comprising an annular dirt cutting edge portion adapted to fit entirely within the border of the spherical surface of the other face and to swivel thereagainst forming a tight connection between said openings for the conduction of lubricant

under pressure from said gun to the receiving element when said nozzle face is pressed against the said element from any one of a plurality of angularly different directions, after their faces are placed in contacting engagement, and an outwardly inclined guide for one of said elements to direct the other element contact face thereto.

7. In a lubricating system, the combination with a lubricant dispensing gun having a lubricant feeding nozzle, of a lubricant receiving element, said gun comprising means to supply lubricant under pressure to said element, the nozzle and said element having cooperating substantially non-compressible contact faces with communicating openings therethrough, one of said contact faces having a spherical surface, and the other contact face comprising an annular contacting portion, said nozzle face being concave, the nipple face adapted to fit entirely within the border of the concave nozzle face and to swivel thereagainst forming a tight dirt cutting connection between said openings for the conduction of lubricant under pressure from said gun to the receiving element when said nozzle face is pressed against the said element from any one of a plurality of angularly different directions, after their faces are placed in contacting engagement.

In testimony whereof I hereunto affix my signature this 1st day of August, 1923.

OSCAR ZERK.

P. B. LASKEY & W. ARNOLD.

Axle Lubricator.

No. 242,141. Patented May 31, 1881.

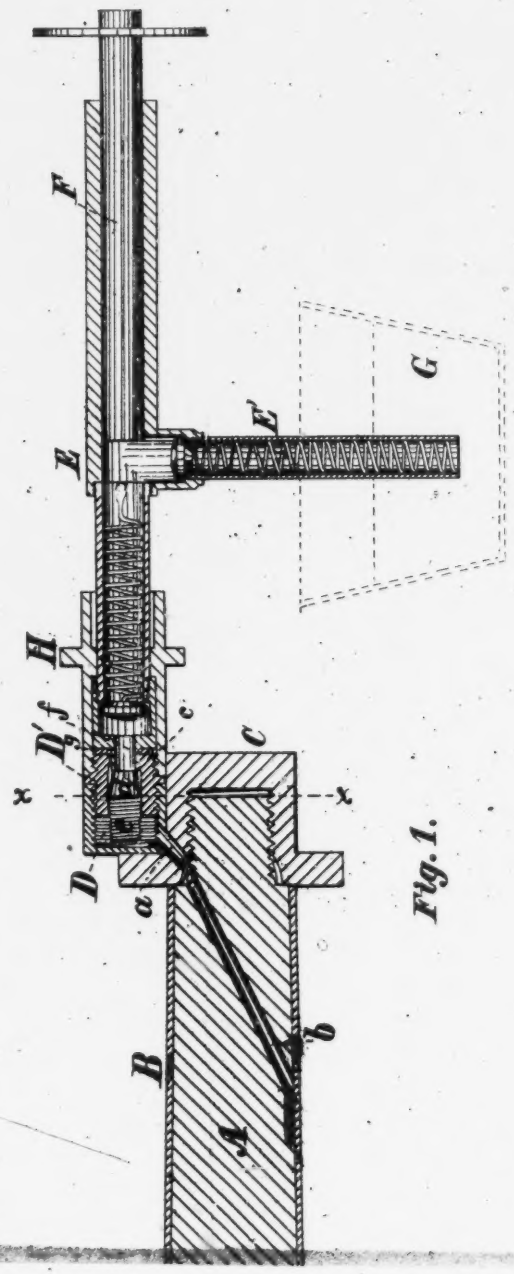

Fig. 1.

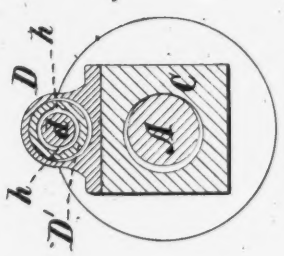

Fig. 2.

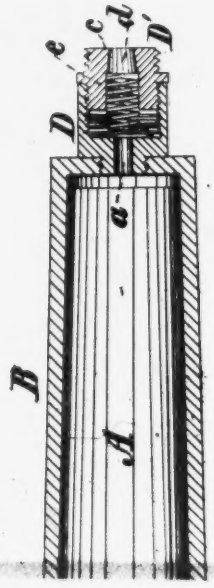

Fig. 3.

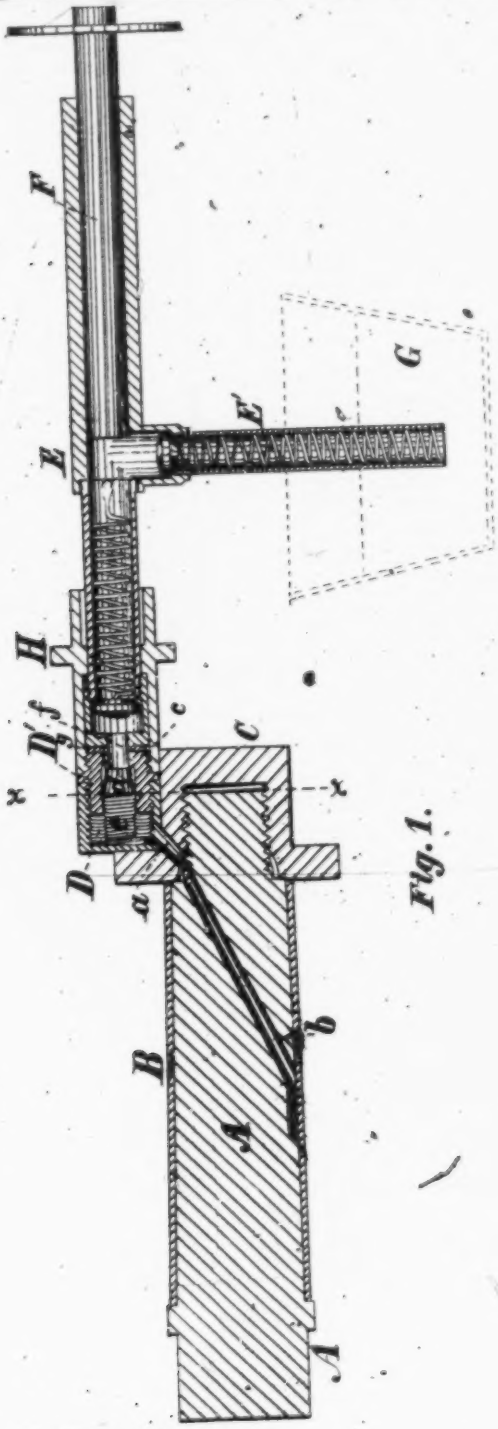

Fig. 1.

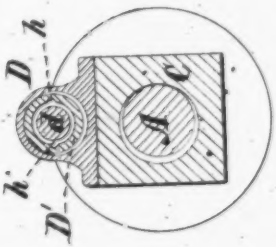

Fig. 2.

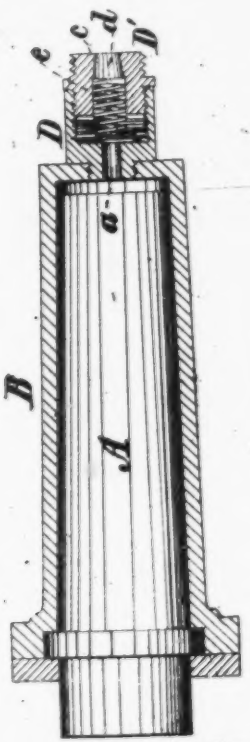

Fig. 3.

Witnesses:
W. E. Lombard.
C. H. Dodd.

Inventors:
Philip B. Laskey,
William Arnold.
by N. G. Lombard.
Attorney.

UNITED STATES PATENT OFFICE.

PHILIP B. LASKEY AND WILLIAM ARNOLD, OF MARBLEHEAD, MASS.

AXLE-LUBRICATOR.

SPECIFICATION forming part of Letters Patent No. 242,141, dated May 31, 1881.

Application filed November 1, 1879.

To all whom it may concern:

Be it known that we, PHILIP B. LASKEY and WILLIAM ARNOLD, both of Marblehead, in the county of Essex and State of Massachusetts, have invented certain new and useful Improvements in Oiling Carriage-Axles, of which the following, taken in connection with the accompanying drawings, is a specification.

Our invention relates to improvements in oiling carriage-axles, whereby such axles may be successfully oiled without removing the wheel or even the holding-nut from the axles; and it consists in the combination, with the axle of a carriage and its box, of an oil-chamber attached to said axle or wheel and communicating with the interior of said box by a suitable passage or conduit, and provided with a supply-orifice having an inwardly-opening and self-closing valve, a force-pump or injector provided with a nozzle adapted to fit said supply-orifice and retract its valve, and a coupling adapted to firmly secure said pump or injector to said oil-chamber during the operation of oiling the wheel.

Figure 1 of the drawings is a central longitudinal section through a wheel-box, a portion of its axle and a force-pump applied thereto and illustrating our invention. Fig. 2 is a vertical transverse section on line *x x* on Fig. 1, and Fig. 3 is a longitudinal central section through a carriage-box, illustrating the manner of applying our invention to a wheel having a box closed at its outer end and secured to the axle by means of a collar upon its inner end.

In Fig. 1, A is the axle and B the hub-box, secured in position on the axle by the nut C in a well-known manner.

To the upper side of the nut C is firmly secured the chamber D, which is provided with a screw-cap, D′, for filling it with oil. The chamber D has screwed into its front or outer end a thimble, D′, through the center of which is made the supply-orifice *c*, larger at its inner end than at its outer end, and having fitted thereto the tapering plug-valve *d*, behind which is the spiral spring *e*, which acts to hold said valve upon its seat to close said supply-orifice.

E is a pump-cylinder, having fitted thereto the piston F, and provided with a suction-pipe, E′, adapted to reach the oil in a vessel, G, (shown in dotted lines,) and with inlet and outlet valves constructed and arranged in any well-known manner. The discharge end of the pump-cylinder is provided with a short pipe or discharge-nozzle, *f*, adapted to enter the supply-orifice *c* and push back the valve *d*, and has fitted thereon, so as to bear against the end of the pump-cylinder, a washer, *g*, of leather, rubber, or other suitable packing material, whereby the joint between the pump-cylinder and the oil-chamber is made tight when the pump is pressed hard against said chamber, and the valve *d* is pressed inward to permit oil to be forced into the chamber and through it and the conduits *a* and *b* into the space between the box B and the axle A.

H is a coupling-sleeve surrounding the pump-cylinder, and adapted to be screwed upon the male thread formed upon the exterior of the thimble D′, as shown, to secure the pump firmly to the chamber, if desired. The interior of the inner end of the thimble D′ has formed therein one or more grooves, *h*, through which oil forced from the pump, may pass around the valve *d* when said valve is forced back by applying the pump thereto, as shown in Fig. 2.

In Fig. 3 is shown a modification illustrating our invention as applied to a wheel-box

AXLE-LUBRICATOR.

SPECIFICATION forming part of Letters Patent No. 242,141, dated May 31, 1881.

Application filed November 1, 1879.

To all whom it may concern:

Be it known that we, PHILIP B. LASKEY and WILLIAM ARNOLD, both of Marblehead, in the county of Essex and State of Massachusetts, have invented certain new and useful Improvements in Oiling Carriage-Axles, of which the following, taken in connection with the accompanying drawings, is a specification.

Our invention relates to improvements in oiling carriage-axles, whereby such axles may be successfully oiled without removing the wheel or even the holding-nut from the axles; and it consists in the combination, with the axle of a carriage and its box, of an oil-chamber attached to said axle or wheel and communicating with the interior of said box by a suitable passage or conduit, and provided with a supply-orifice having an inwardly-opening and self-closing valve, a force-pump or injector provided with a nozzle adapted to fit said supply-orifice and retract its valve, and a coupling adapted to firmly secure said pump or injector to said oil-chamber during the operation of oiling the wheel.

Figure 1 of the drawings is a central longitudinal section through a wheel-box, a portion of its axle and a force-pump applied thereto and illustrating our invention. Fig. 2 is a vertical transverse section on line *x x* on Fig. 1, and Fig. 3 is a longitudinal central section through a carriage-box, illustrating the manner of applying our invention to a wheel having a box closed at its outer end and secured to the axle by means of a collar upon its inner end.

In Fig. 1, A is the axle and B the hub-box, secured in position on the axle by the nut C in a well-known manner.

To the upper side of the nut C is firmly secured the oil-chamber D, communicating through the hole *a*, made through said nut, and the conduit *b*, made obliquely through the axle A, from its nut-bearing shoulder downward to a point upon the outside of said axle at or near the middle of the length of its bearing-surface within the hub-box.

For new carriages the chamber D may be made in one piece with the nut C, but in altering old carriages it is preferable to construct the chamber separately and attach it to the nut by the well-known process called "sweating."

The chamber D has screwed into its front or outer end a thimble, D′, through the center of which is made the supply-orifice *c*, larger at its inner end than at its outer end, and having fitted thereto the tapering plug-valve *d*, behind which is the spiral spring *e*, which acts to hold said valve upon its seat to close said supply-orifice.

E is a pump-cylinder, having fitted thereto the piston F, and provided with a suction-pipe, E′, adapted to reach the oil in a vessel, G, (shown in dotted lines,) and with inlet and outlet valves constructed and arranged in any well-known manner. The discharge end of the pump-cylinder is provided with a short pipe or discharge-nozzle, *f*, adapted to enter the supply-orifice *c* and push back the valve *d*, and has fitted thereon, so as to bear against the end of the pump-cylinder, a washer, *g*, of leather, rubber, or other suitable packing material, whereby the joint between the pump-cylinder and the oil-chamber is made tight when the pump is pressed hard against said chamber, and the valve *d* is pressed inward to permit oil to be forced into the chamber and through it and the conduits *a* and *b* into the space between the box B and the axle A.

H is a coupling-sleeve surrounding the pump-cylinder, and adapted to be screwed upon the male thread formed upon the exterior of the thimble D′, as shown, to secure the pump firmly to the chamber, if desired. The interior of the inner end of the thimble D′ has formed therein one or more grooves, *h*, through which oil forced from the pump, may pass around the valve *d* when said valve is forced back by applying the pump thereto, as shown in Fig. 2.

In Fig. 3 is shown a modification illustrating our invention as applied to a wheel-box that is secured to its axle by means of a collar upon its inner end, in which A is the axle, B the box, and D the oil-chamber screwed into the center of the outer end of the box, as shown, the oil-chamber in all other respects being constructed substantially like that shown in Fig. 1, D′ being the thimble, *d* the valve actuated by the spring *e*, and *a* the conduit leading therefrom to the interior of the box B, the pump being applied thereto and operating in connection therewith precisely as heretofore described.

The operation of our invention is as follows:

It being desired to oil a carriage-wheel supplied with our improvements, the suction-pipe E′ is placed in any suitable receptacle containing the required oil to be used, and the piston is drawn out to charge the cylinder with oil, when the discharge-nozzle is pressed against the valve *d* to force it inward till the packing *g* presses hard against the end of the thimble D′, when, if the piston F be forced inward, oil will be forced into the chamber D and through the conduits *a* and *b* into the space between the axle and box, completely filling said space, when, if the pump be removed, the valve *d* closes the orifice *c* and effectually prevents any escape of the oil through said orifice.

In cold weather, when the oil is stiff, or in cases when the oil in the wheel-hub has become gummy or foul from any cause, it is necessary to firmly attach the pump to the oil-chamber by means of the coupling-sleeve H, and the male thread on the outer portion, D′, of the oil-chamber, so as to insure a tight packed joint between the pump and the oil-chamber, when there will no difficulty in forcing the oil into the box around the axle.

What we claim as new, and desire to secure by Letters Patent of the United States, is—

In combination with the axle A and box B, the oil-chamber D, communicating with the interior of said box and provided with a supply-orifice, an inwardly-opening self-acting valve, *d*, and a male screw-thread upon the exterior of its outer portion, a force-pump or injector provided with a discharge-nozzle adapted to enter said supply-orifice and push back the valve *d*, and a coupling-sleeve, H, provided with an internal thread to engage with the thread on the oil-chamber, all arranged and adapted to operate substantially as and for the purposes described.

Executed at Boston, Massachusetts, this 30th day of October, 1879.

PHILIP B. LASKEY.
WILLIAM ARNOLD.

Witnesses:
N. C. LOMBARD,
C. H. DODD.

(Model.)

L. H. SHOLDER.

Hose Coupling.

No. 242,564. Patented June 7, 1881.

Fig 1.

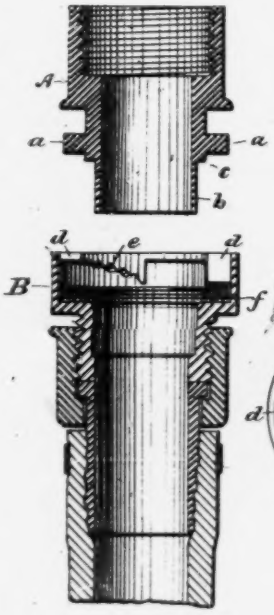

Fig 2.

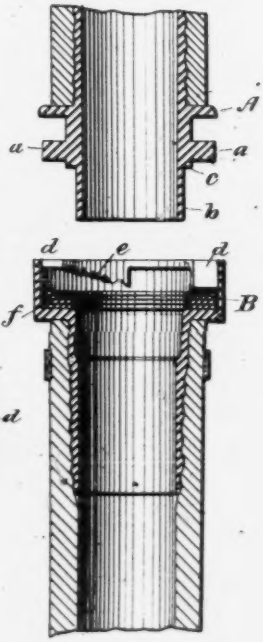

Fig 3.

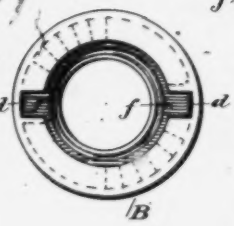

Fig 4.

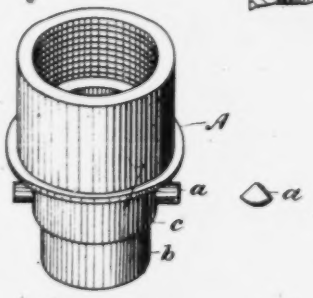

Fig 5.

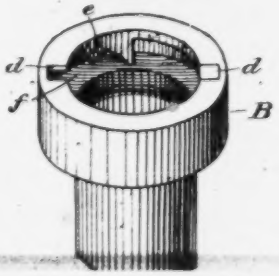

No. 242,564. Patented June 7, 1881.

Fig. 1.

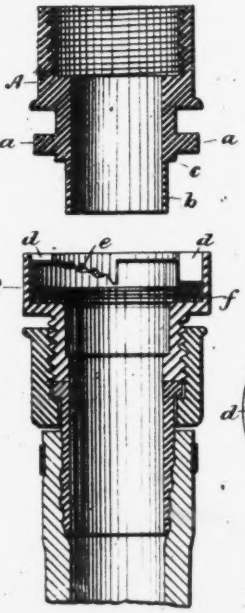

Fig. 2.

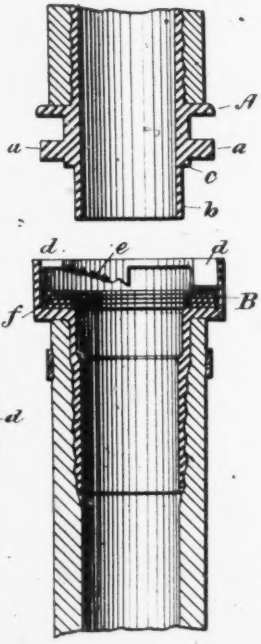

Fig. 3.

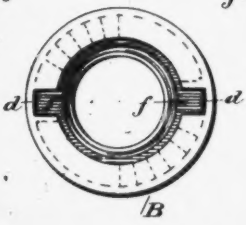

Fig. 4.

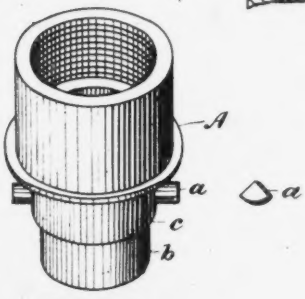

Fig. 5.

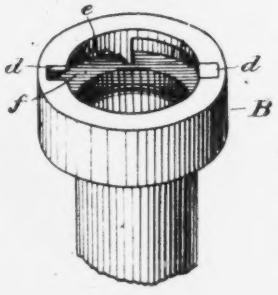

WITNESSES

D. Lehman.

W. E. Donnelly

INVENTOR

L. H. Sholder.

By Dewgett & Dewgett.

ATTORNEYS

UNITED STATES PATENT OFFICE.

LOUIS H. SHOLDER, OF CLEVELAND, OHIO.

HOSE-COUPLING.

SPECIFICATION forming part of Letters Patent No. 242,564, dated June 7, 1881.

Application filed February 9, 1881. (Model.)

To all whom it may concern:

Be it known that I, LOUIS H. SHOLDER, of Cleveland, in the county of Cuyahoga and State of Ohio, have invented certain new and useful Improvements in Hose-Couplings; and I do hereby declare the following to be a full, clear, and exact description of the invention, such as will enable others skilled in the art to which it pertains to make and use it, reference being had to the accompanying drawings, which form part of this specification.

My invention relates to hose-couplings; and it consists in so constructing a hose-coupling that it can be manufactured much cheaper and at the same time be just as serviceable in every respect as any of the more expensive ones now in use. It is also much more easily manipulated, and can be coupled in an instant without the use of a wrench or any like tool.

In the drawings, Figure 1 is a longitudinal sectional view of my coupling, having screw-threads formed on the male and female parts to adapt them to be attached to the common screw-coupling now in use. Fig. 2 is a longitudinal sectional view of my coupling, showing it attached directly to the hose. Fig. 3 is a plan view, showing the openings of the female part of my coupling; and Figs. 4 and 5 are isometric views of the male and female parts, showing them in position to be coupled.

Like letters of reference represent corresponding parts in the several figures.

A represents the male part of my coupling, and is provided with lugs *a*, and also spigot *b* and shoulder *c*. As shown in Fig. 1, in some cases I provide this part with a female thread, which corresponds with the male thread of the common screw-coupling, so that it may be readily attached to hose having said male screw part.

B represents the female part of my coupling, which is provided with openings *d* and inclines *e*. The male part A of my coupling is attached to one end of a length of hose, either directly, as shown in Fig. 2, or by means of the male part of the common screw-coupling, as the case may be. The female part B is attached to one end of the length to be coupled with the first length, either directly, as shown in Fig. 2, or by means of the female part of the common screw-coupling, as shown in Fig. 1. Now, to couple the parts the lugs *a* are brought opposite the openings *d*, which are large enough to admit them. After being entered the parts A and B are turned in opposite directions, and the lugs *a* coming in contact with the inclines *e*, said inclines bring the shoulder *c* against the packing *f*, which, being pressed tightly between shoulder *c* and its seat on the female part of the coupling, forces it against the outer circumference of spigot *b*, and also the inner circumference of the female part of the coupling, thus forming a perfectly tight joint.

It will be seen that I have provided the inclines *e* with roughened faces. My reason for this is to keep the lugs *a* from slipping back after being once turned in place upon said inclines, the rubber packing serving to force the sharp side of the lugs *a* tightly against the said roughened face of the incline and hold it there.

It will also be seen that my coupling can be manufactured much cheaper than many now in use, as the only work on them after they are cast is to clean them, the annular rubber packing, when compressed between the shoulder *c* and its seat in the female part of the coupling, filling every irregularity of the surfaces with which it comes in contact, and hence forming a perfectly tight joint.

What I claim is—

1. A hose-coupling, the same being provided on its male portion with lugs *a* and on its female part with inclines *e*, said inclines

HOSE-COUPLING.

SPECIFICATION forming part of Letters Patent No. 242,564, dated June 7, 1881.

Application filed February 9, 1881. (Model.)

To all whom it may concern:

Be it known that I, LOUIS H. SHOLDER, of Cleveland, in the county of Cuyahoga and State of Ohio, have invented certain new and useful Improvements in Hose-Couplings; and I do hereby declare the following to be a full, clear, and exact description of the invention, such as will enable others skilled in the art to which it pertains to make and use it, reference being had to the accompanying drawings, which form part of this specification.

My invention relates to hose-couplings; and it consists in so constructing a hose-coupling that it can be manufactured much cheaper and at the same time be just as serviceable in every respect as any of the more expensive ones now in use. It is also much more easily manipulated, and can be coupled in an instant without the use of a wrench or any like tool.

In the drawings, Figure 1 is a longitudinal sectional view of my coupling, having screw-threads formed on the male and female parts to adapt them to be attached to the common screw-coupling now in use. Fig. 2 is a longitudinal sectional view of my coupling, showing it attached directly to the hose. Fig. 3 is a plan view, showing the openings of the female part of my coupling; and Figs. 4 and 5 are isometric views of the male and female parts, showing them in position to be coupled.

Like letters of reference represent corresponding parts in the several figures.

A represents the male part of my coupling, and is provided with lugs *a*, and also spigot *b* and shoulder *c*. As shown in Fig. 1, in some cases I provide this part with a female thread, which corresponds with the male thread of the common screw-coupling, so that it may be readily attached to hose having said male screw part.

B represents the female part of my coupling, which is provided with openings *d* and inclines *e*, said inclines being roughened. *f* is an annular rubber packing. It will be seen by reference to Fig. 1 of the drawings that I also provide this part with a screw-thread adapted to correspond with the female thread of the common screw-coupling, so that it also may be readily attached to hose having said female screw part.

The operation of my device is as follows: The male part A of my coupling is attached to one end of a length of hose, either directly, as shown in Fig. 2, or by means of the male part of the common screw-coupling, as the case may be. The female part B is attached to one end of the length to be coupled with the first length, either directly, as shown in Fig. 2, or by means of the female part of the common screw-coupling, as shown in Fig. 1. Now, to couple the parts the lugs *a* are brought opposite the openings *d*, which are large enough to admit them. After being entered the parts A and B are turned in opposite directions, and the lugs *a* coming in contact with the inclines *e*, said inclines bring the shoulder *c* against the packing *f*, which, being pressed tightly between shoulder *c* and its seat on the female part of the coupling, forces it against the outer circumference of spigot *b*, and also the inner circumference of the female part of the coupling, thus forming a perfectly tight joint.

It will be seen that I have provided the inclines *e* with roughened faces. My reason for this is to keep the lugs *a* from slipping back after being once turned in place upon said inclines, the rubber packing serving to force the sharp side of the lugs *a* tightly against the said roughened face of the incline and hold it there.

It will also be seen that my coupling can be manufactured much cheaper than many now in use, as the only work on them after they are cast is to clean them, the annular rubber packing, when compressed between the shoulder *c* and its seat in the female part of the coupling, filling every irregularity of the surfaces with which it comes in contact, and hence forming a perfectly tight joint.

What I claim is—

1. A hose-coupling, the same being provided on its male portion with lugs *a* and on its female part with inclines *e*, said inclines having a roughened face, substantially as described.

2. In a hose-coupling, the combination of the male part A, with its lugs *a*, shoulder *c*, and spigot *b* of the female part, said female part being provided with inclines *e* and washer *f*, substantially as described.

3. A hose-coupling substantially as described, one part of said hose-coupling being

screw-threaded in such a manner that it may be attached to the male part of the common screw-coupling, and the other part being adapted to be attached to the female part of said common screw-coupling, substantially as described.

In testimony whereof I have signed my name to this specification in the presence of two subscribing witnesses.

LOUIS H. SHOLDER.

Witnesses:
H. SCOTT HOWELL,
WM. F. WAPPICH.

(No Model.)

G. A. & D. R. STEDMAN.

PIPE OR HOSE COUPLING.

No. 456,295. Patented July 21, 1891.

Fig. 1.

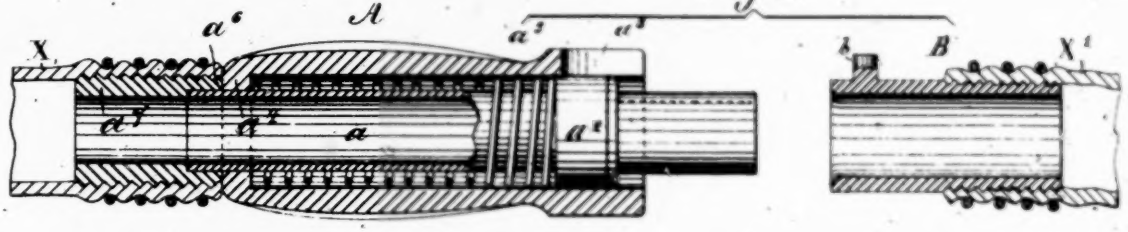

Fig. 2.

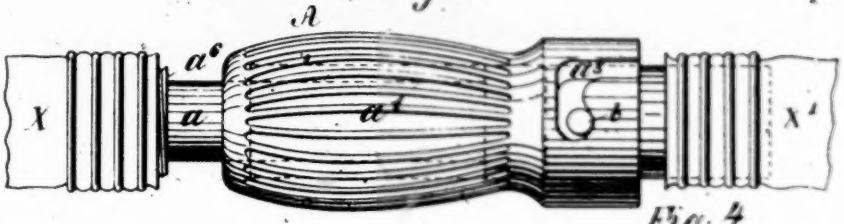

Fig. 3.

Fig. 4.

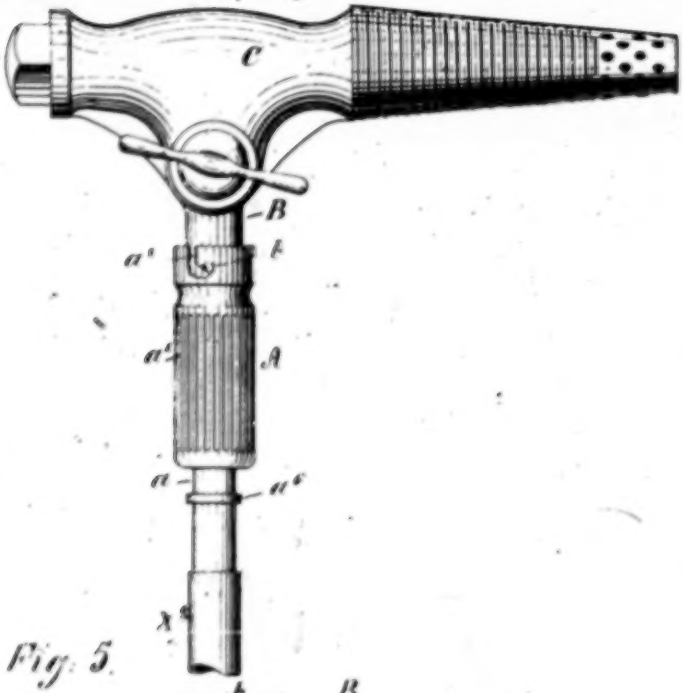

Fig. 5.

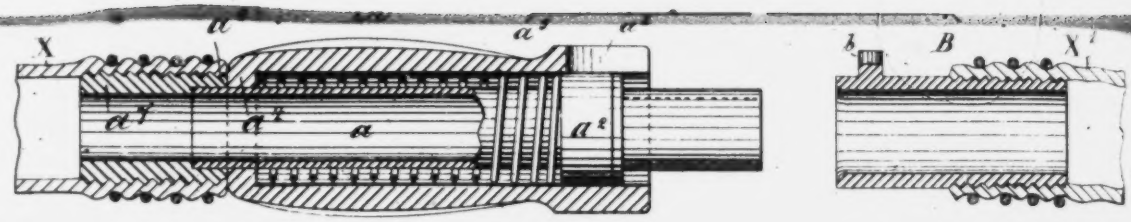

Fig: 2.

Fig: 3.

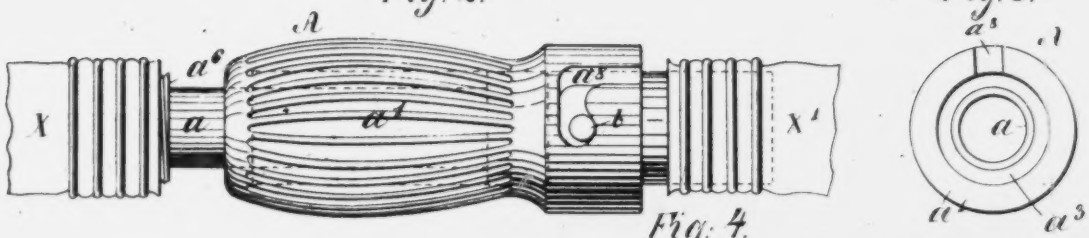

Fig: 4.

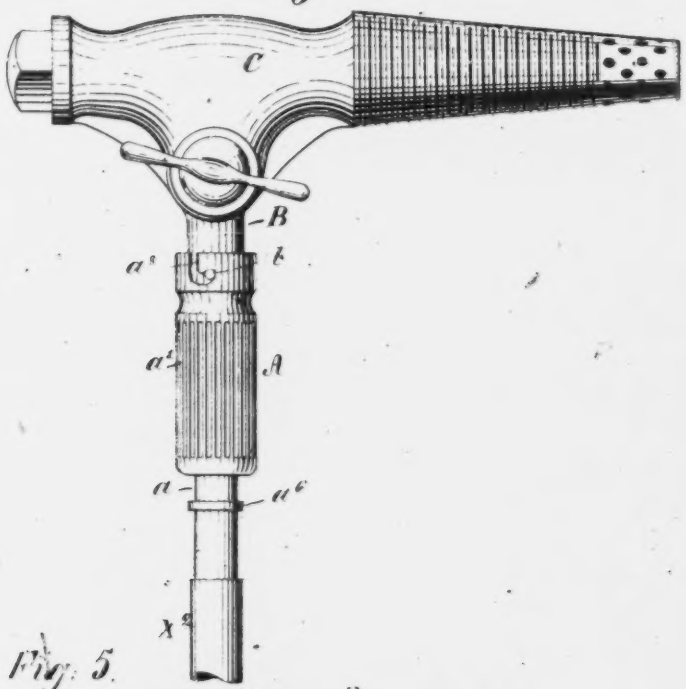

Fig: 5.

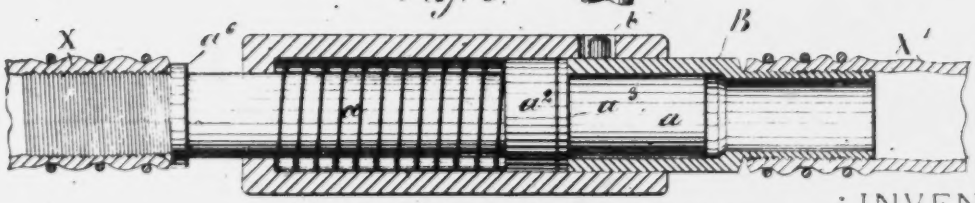

INVENTORS.

George A. Stedman,
David R. Stedman.

By Henry Connett
Attorney.

WITNESSES:

J. H. Caplinger
Chas. A. Walsh.

UNITED STATES PATENT OFFICE.

GEORGE A. STEDMAN, OF NEW YORK, N. Y., AND DAVID R. STEDMAN, OF ELIZABETH, NEW JERSEY, ASSIGNORS TO THE LEES MANUFACTURING COMPANY.

PIPE OR HOSE COUPLING.

SPECIFICATION forming part of Letters Patent No. 456,295, dated July 21, 1891.

Application filed December 18, 1890. Serial No. 375,076. (No model.)

To all whom it may concern:

Be it known that we, GEORGE A. STEDMAN, residing in the city, county, and State of New York, and DAVID R. STEDMAN, residing in Elizabeth, Union county, New Jersey, both citizens of the United States, have invented certain Improvements in Pipe or Hose Couplings, of which the following is a specification.

Our invention relates to that class of couplings wherein the sections of hose or pipes to be coupled each carries a member of the coupling and the coupling together is effected without the aid of screws; and the object of the invention is to provide a coupling which may be manipulated quickly by any one, no matter how inexperienced he may be, and one which will be perfectly tight under all ordinary conditions.

Our invention will be fully described hereinafter, and its novel features carefully defined in the claims.

In the accompanying drawings, Figure 1 is a longitudinal section of a hose-coupling embodying our improvements. This view shows the two members detached. Fig. 2 is an elevation of the coupling, showing the members locked or coupled together. Fig. 3 is an end view of the major member of the coupling. Fig. 4 is a view illustrating the application of our coupling to the coupling of an ale or beer faucet to a pipe. Fig. 5 is a sectional view of a modification.

Although we have herein shown only two applications of our coupling, it is equally well adapted for coupling pipes or hose together and for coupling pipes or hose to nipples and nozzles of all kinds.

collar a^2 forms a second bearing for the tube and keeps the latter centrally situated in the bore of the casing. Within the bore of the casing and embracing the tube a is a coiled spring a^3, which abuts at one end against the shoulder at the rear end of the casing and at the other against the inner face of the collar a^2. This spring tends to drive the tube toward the open end or mouth of the casing; but a limiting-shoulder a^6, formed on the tube, seats itself against the rear end of the casing and keeps the spring under some tension. The shoulder a^6 is formed by securing to the tube a a grooved or roughened nipple a^7, to which the hose X is secured. In the casing a', at its open end, is formed an L-shaped slot a^4, the form of which is best seen in Fig. 2.

The inferior member B is in the form of a short section of pipe, to which is secured a section of hose X'. The internal diameter of the member B is the same as the external diameter of the tube a, and the external diameter of said member is the same as the diameter of the bore in casing a', whereby said member may be slipped over the end of the tube a, which extends beyond the collar a^2 and projects from the open end of the casing, and is made to enter the latter. On the member B is a stud or projection b.

Fig. 1 shows the members separated and in their normal condition. To effect the coupling, it is only necessary to bring the two members together, pushing the inferior member over the extremity of tube a until its end bears on and against the packing-ring a^5, the stud b entering the slot a^4. The members are now pushed together as far as the slot will permit, the collar a^2 yielding and compress-

COMPANY.

PIPE OR HOSE COUPLING.

SPECIFICATION forming part of Letters Patent No. 456,295, dated July 21, 1891.

Application filed December 18, 1890. Serial No. 375,076. (No model.)

To all whom it may concern:

Be it known that we, GEORGE A. STEDMAN, residing in the city, county, and State of New York, and DAVID R. STEDMAN, residing in Elizabeth, Union county, New Jersey, both citizens of the United States, have invented certain Improvements in Pipe or Hose Couplings, of which the following is a specification.

Our invention relates to that class of couplings wherein the sections of hose or pipes to be coupled each carries a member of the coupling and the coupling together is effected without the aid of screws; and the object of the invention is to provide a coupling which may be manipulated quickly by any one, no matter how inexperienced he may be, and one which will be perfectly tight under all ordinary conditions.

Our invention will be fully described hereinafter, and its novel features carefully defined in the claims.

In the accompanying drawings, Figure 1 is a longitudinal section of a hose-coupling embodying our improvements. This view shows the two members detached. Fig. 2 is an elevation of the coupling, showing the members locked or coupled together. Fig. 3 is an end view of the major member of the coupling. Fig. 4 is a view illustrating the application of our coupling to the coupling of an ale or beer faucet to a pipe. Fig. 5 is a sectional view of a modification.

Although we have herein shown only two applications of our coupling, it is equally well adapted for coupling pipes or hose together and for coupling pipes or hose to nipples and nozzles of all kinds.

Referring primarily to the first three figures, A is the major member of the coupling as a whole, and B is the minor member. The major member comprises a tube a, to which is secured one section of hose X. This tube a extends through a tubular casing a', which is capable of rotating on the tube. On the tube a is a collar a^2, which fits the bore of the casing a' in the manner of a piston, and is provided with a packing-ring a^3 on its outer face, of rubber or similar soft packing material. The tube a has a bearing at a^4 in the rear closed end of the tubular casing, and the collar a^2 forms a second bearing for the tube and keeps the latter centrally situated in the bore of the casing. Within the bore of the casing and embracing the tube a is a coiled spring a^5, which abuts at one end against the shoulder at the rear end of the casing and at the other against the inner face of the collar a^2. This spring tends to drive the tube toward the open end or mouth of the casing; but a limiting-shoulder a^6, formed on the tube, seats itself against the rear end of the casing and keeps the spring under some tension. The shoulder a^6 is formed by securing to the tube a a grooved or roughened nipple a^7, to which the hose X is secured. In the casing a', at its open end, is formed an L-shaped slot a^8, the form of which is best seen in Fig. 2.

The inferior member B is in the form of a short section of pipe, to which is secured a section of hose X'. The internal diameter of the member B is the same as the external diameter of the tube a, and the external diameter of said member is the same as the diameter of the bore in casing a', whereby said member may be slipped over the end of the tube a, which extends beyond the collar a^2 and projects from the open end of the casing, and is made to enter the latter. On the member B is a stud or projection b.

Fig. 1 shows the members separated and in their normal condition. To effect the coupling, it is only necessary to bring the two members together, pushing the inferior member over the extremity of tube a until its end bears on and against the packing-ring a^3, the stud b entering the slot a^8. The members are now pushed together as far as the slot will permit, the collar a^2 yielding and compressing the spring a^5 behind it. The casing a' is now turned with the hand until the stud b engages the lateral branch of the slot, as seen in Fig. 2. This locks the members together. The spring keeps the packing pressed up tightly against the member B and forms a tight joint. The members may be instantly disengaged or uncoupled by reversing this operation.

To prevent dirt from getting into the interior of the casing through the slot a^8, the piston-like collar a^2 is made wide enough to cover the slot and is arranged to stand in po-

sition to cover and close the slot normally, as seen in Fig. 1.

The inferior member B may be a pipe or a nipple, as it is merely a plain tube provided with a locking-stud. In Fig. 4 we have shown the application of our coupling to the nipple of a faucet. In this figure C is a faucet of an ordinary kind, of which the outlet-nipple forms the inferior member B of the coupling. In this view a metal pipe or tube X^2 replaces the hose X of Figs. 1 and 2. In other respects the coupling is the same as that before described.

Fig. 5 is a view illustrating a slight modification. In this case the hose X is attached directly to the tube *a*, and the member B is reduced in size to receive the hose X′. By this construction hose of smaller diameter or having an internal diameter nearly the same as that of tube *a* may be coupled together. This view serves to illustrate the interior construction when the two elements are coupled or locked together. The casing *a′* may be roughened exteriorly, in order to prevent the hand from slipping. It may have any convenient form exteriorly.

Having thus described our invention, we claim—

1. In a coupling, the combination of a tube *a*, having fixed on it a collar a^2, with a packing a^3 on its face, a tubular member B, adapted to fit over the tube *a*, with its end abutting against said packing, a sliding casing on the tube *a*, a spring arranged between the collar a^2 and some part of said casing, and reciprocal fastenings on the said casing and the member B, substantially as set forth.

2. In a coupling, the combination, with a tube *a*, having fixed on it a limiting-shoulder a^6 and a collar a^2, the latter having on its outer face a packing a^3, of a tubular member B, adapted to fit over the tube *a*, with its end abutting against the packing a^3, a sliding casing on the tube *a*, having a bore in which the collar a^2 fits, a spring a^5 within said casing and embracing the tube *a*, said spring abutting at one end against the collar a^2 and at its other end against some part of said casing, and reciprocal fastenings on the said casing and the member B, the limiting-shoulder a^6 being exterior to the casing, substantially as set forth.

In witness whereof we have hereunto signed our names in the presence of two subscribing witnesses.

GEORGE A. STEDMAN.
DAVID R. STEDMAN.

Witnesses:
ARTHUR FITCH,
THEODORE F. LEES.

No. 610,359. Patented Sept. 6, 1898.

T. F. LEES.

COUPLING FOR PIPES AND HOSE.

(Application filed Oct. 6, 1897.)

(No Model.)

Fig. 1.

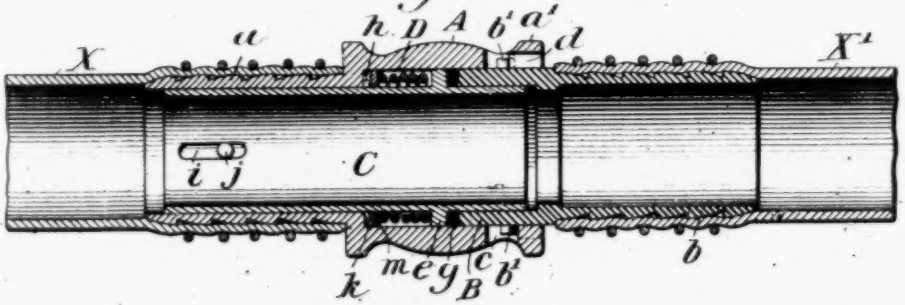

Fig. 2.

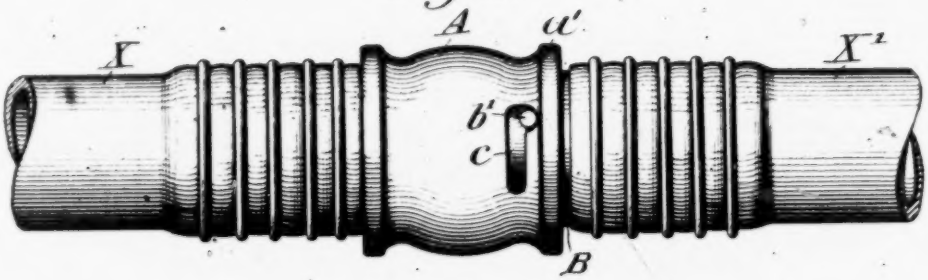

Fig. 3.

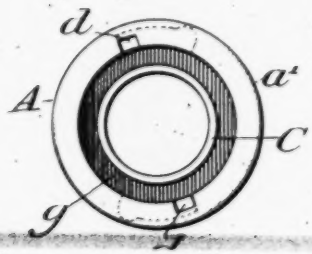

Fig. 1.

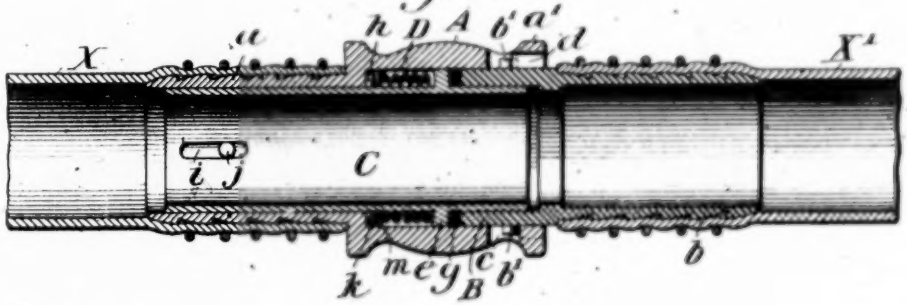

Fig. 2.

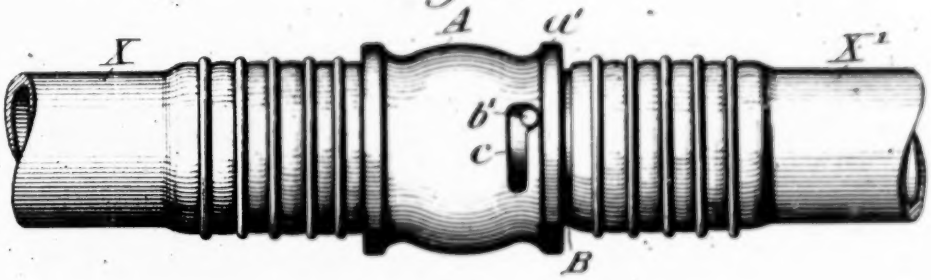

Fig. 3.

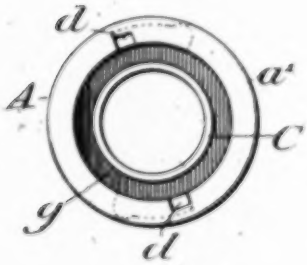

Witnesses.

J. W. Kliman

Peter A. Ross

Inventor.

Theodore F. Lees

by Henry Connett

Atty.

UNITED STATES PATENT OFFICE.

THEODORE F. LEES, OF NEW YORK, N. Y.

COUPLING FOR PIPES AND HOSE.

SPECIFICATION forming part of Letters Patent No. 610,359, dated September 6, 1898.

Application filed October 6, 1897. Serial No. 654,278. (No model.) Patented in England February 12, 1895, No. 3,074.

To all whom it may concern:

Be it known that I, THEODORE F. LEES, a citizen of the United States, residing in the city, county, and State of New York, have invented certain new and useful Improvements in Couplings for Pipes and Hose, (which have been patented in Great Britain under No. 3,074, dated February 12, 1895,) of which the following is a specification.

This invention relates to improvements in the coupling described in Letters Patent of the United States of July 21, 1891, No. 456,295. In the present instance the coupling comprises in part a tubular major member having a flange about one or both of its ends and provided at one end with a tubular prolongation, preferably circumferentially corrugated, adapted to receive a section of hose if the coupling is to be used for flexible hose. Within this major member is mounted a sliding tube having on it a collar or flange to form one abutment for a coil-spring, which is placed between this collar and a shoulder formed on the interior of the major member of the coupling. This inner tube projects out from the mouth or receiving end of the major member and extends back into the tubular prolongation of such major member at the end opposite to its mouth, where said tube has in it a slot engaged by a pin or stud in the major member, this stud forming a limiting-stop to limit the movement of the tube longitudinally in the major member of the coupling. The minor member of the coupling is also tubular. At one end it is adapted to fit snugly over the protruding end of the sliding tube in the major member of the coupling, and to fit snugly into the mouth or receiving end of said major member. The entering end of this minor member impinges on a packing-ring on said inner sliding tube, other, the inner sliding tube being pushed back, compressing the cushion-spring, in order to effect the locking.

In the accompanying drawings an embodiment of this invention is illustrated, Figure 1 being a longitudinal axial section thereof, Fig. 2 a plan view, and Fig. 3 an end view, of the major member, showing its receiving end.

A is the major member of the coupling, provided with a prolongation *a* for the attachment of the hose X and with a flange *a'* at its mouth or receiving end.

B is the minor member, which is provided with a prolongation *b* to receive the hose X' and with locking-studs *b'* to engage locking-slots *c* in the major member, the studs *b'* passing through passages or openings *d* in the flange *a'*.

C is the sliding tube in the major member, this tube having a flange *e* and packing-ring *g*.

D is the spring between the flange *e* and a shoulder at *h* on the major member.

In the tube C is a slot *i*, which is engaged by a stud *j* on the major member A. This slot limits the movement of the tube C, under the influence of the spring D, when the members of the coupling are disengaged.

It will be noted that in the construction of the Patent No. 456,295 the hose X is secured to the tube C or what corresponds thereto, while in the present case it is secured to the major member and not to the tube C. Moreover, in the present case the entering end of the minor member B, where it bears on the packing-ring *g*, is slightly beveled, so that it tends to press the latter outward against the inner wall of the major member and produce a very tight joint. This construction obviously prevents the separation of the parts at the packed joint when there is a tensile strain

COUPLING FOR PIPES AND HOSE.

SPECIFICATION forming part of Letters Patent No. 610,359, dated September 6, 1898.

Application filed October 6, 1897. Serial No. 654,278. (No model.) Patented in England February 12, 1895, No. 3,074.

To all whom it may concern:

Be it known that I, THEODORE F. LEES, a citizen of the United States, residing in the city, county, and State of New York, have invented certain new and useful Improvements in Couplings for Pipes and Hose, (which have been patented in Great Britain under No. 3,074, dated February 12, 1895,) of which the following is a specification.

This invention relates to improvements in the coupling described in Letters Patent of the United States of July 21, 1891, No. 456,295. In the present instance the coupling comprises in part a tubular major member having a flange about one or both of its ends and provided at one end with a tubular prolongation, preferably circumferentially corrugated, adapted to receive a section of hose if the coupling is to be used for flexible hose. Within this major member is mounted a sliding tube having on it a collar or flange to form one abutment for a coil-spring, which is placed between this collar and a shoulder formed on the interior of the major member of the coupling. This inner tube projects out from the mouth or receiving end of the major member and extends back into the tubular prolongation of such major member at the end opposite to its mouth, where said tube has in it a slot engaged by a pin or stud in the major member, this stud forming a limiting-stop to limit the movement of the tube longitudinally in the major member of the coupling. The minor member of the coupling is also tubular. At one end it is adapted to fit snugly over the protruding end of the sliding tube in the major member of the coupling, and to fit snugly into the mouth or receiving end of said major member. The entering end of this minor member impinges on a packing-ring on said inner sliding tube, which ring is seated on the outer face of the flange on said tube. On the minor member are two oppositely-arranged outwardly-projecting locking-studs, which when the two members are being put together in coupling pass through openings in the flange on the major member of the coupling and into an L-shaped locking-slot in the latter, whereby one member of the coupling is locked to the other, the inner sliding tube being pushed back, compressing the cushion-spring, in order to effect the locking.

In the accompanying drawings an embodiment of this invention is illustrated, Figure 1 being a longitudinal axial section thereof, Fig. 2 a plan view, and Fig. 3 an end view, of the major member, showing its receiving end.

A is the major member of the coupling, provided with a prolongation *a* for the attachment of the hose X and with a flange *a'* at its mouth or receiving end.

B is the minor member, which is provided with a prolongation *b* to receive the hose X' and with locking-studs *b'* to engage locking-slots *c* in the major member, the studs *b'* passing through passages or openings *d* in the flange *a'*.

C is the sliding tube in the major member, this tube having a flange *e* and packing-ring *g*.

D is the spring between the flange *e* and a shoulder at *h* on the major member.

In the tube C is a slot *i*, which is engaged by a stud *j* on the major member A. This slot limits the movement of the tube C, under the influence of the spring D, when the members of the coupling are disengaged.

It will be noted that in the construction of the Patent No. 456,295 the hose X is secured to the tube C or what corresponds thereto, while in the present case it is secured to the major member and not to the tube C. Moreover, in the present case the entering end of the minor member B, where it bears on the packing-ring *g*, is slightly beveled, so that it tends to press the latter outward against the inner wall of the major member and produce a very tight joint. This construction obviously prevents the separation of the parts at the packed joint when there is a tensile strain on the hose—as, for example, when the pull on the hose X is resisted by a pull on the hose X'.

Preferably there will be interposed between the end of the spring D and the shoulder *h* a packing-ring *k*, resting against said shoulder, and a washer *m*, resting on the packing, to protect the latter from abrasion by the spring. The packing *k* is a safeguard against leakage

about the tubular member C where it plays in the part *a* of the major member A of the coupling.

Having thus described my invention, I claim—

1. In a coupling, the combination with the major, female member A, having formed in one with it the prolongation *a* for the hose, of the flanged sliding tube C, mounted in the major member, the spring D, arranged between shoulders on the major member and said tube C, the minor member B, adapted to fit over the said tube C and into the major member, a packing-ring at the joint and a locking device to secure the major and minor members together, substantially as set forth.

2. In a coupling, the combination, with the major member A, having formed in one with it the prolongation *a* for the hose, and having a locking-slot, *c*, of the flanged sliding tube C, mounted in the major member and furnished with a limiting-slot *i*, engaging a stud on the major member, the spring D, and the minor member B, provided with locking-studs, as set forth.

3. In a coupling, the combination with the member A, provided with a prolongation *a* and an internal shoulder *h*, the member B, and means substantially as described for locking the members together, of the flanged tube C in the said members, said tube having a flange *e*, the packing-ring *g*, between the flange *e* and the end of the member B, the packing-ring *k* and washer *m*, adjacent to the shoulder *h*, and the spring C, between the shoulder *e* and washer *m*, substantially as set forth.

In witness whereof I have hereunto signed my name in the presence of two subscribing witnesses.

THEODORE F. LEES.

Witnesses:
PETER A. ROSS,
HENRY CONNETT.

A. M. BARCUS.

COUPLING FOR HOSE AND THE LIKE.

APPLICATION FILED FEB. 25, 1913.

1,117,762.

Patented Nov. 17, 1914.

Fig. 1

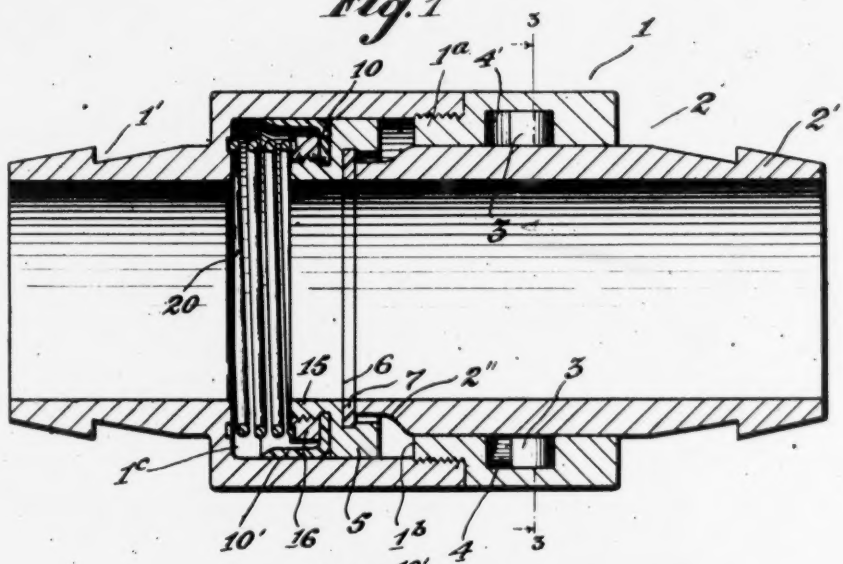

Fig. 2

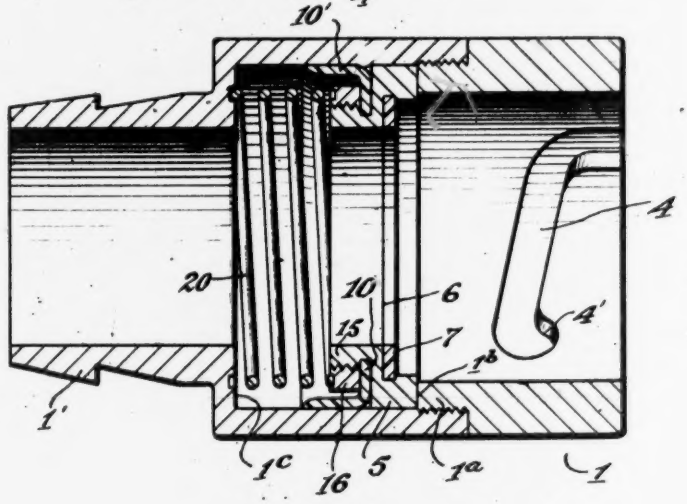

Fig. 3

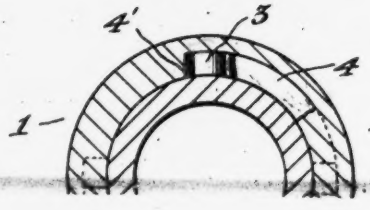

APPLICATION FILED FEB. 26, 1913.

1,117,762. Patented Nov. 17, 1914.

Fig. 1

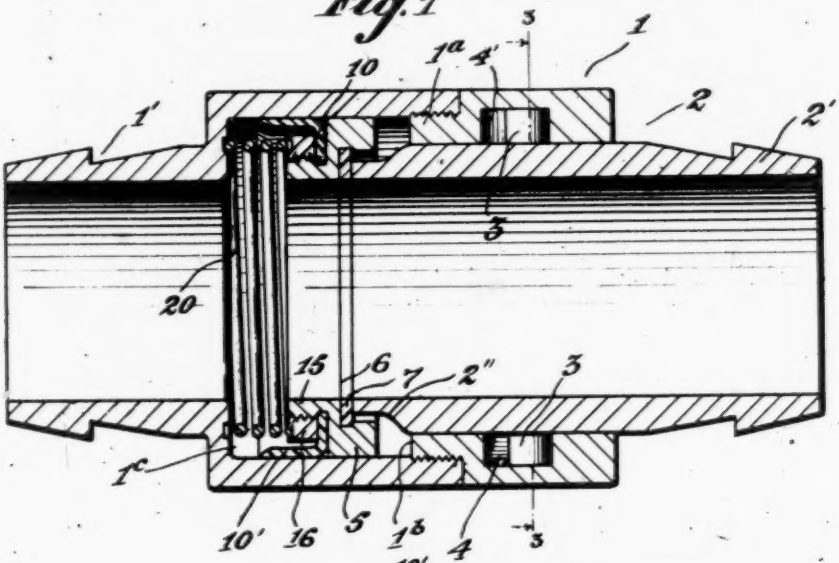

Fig. 2

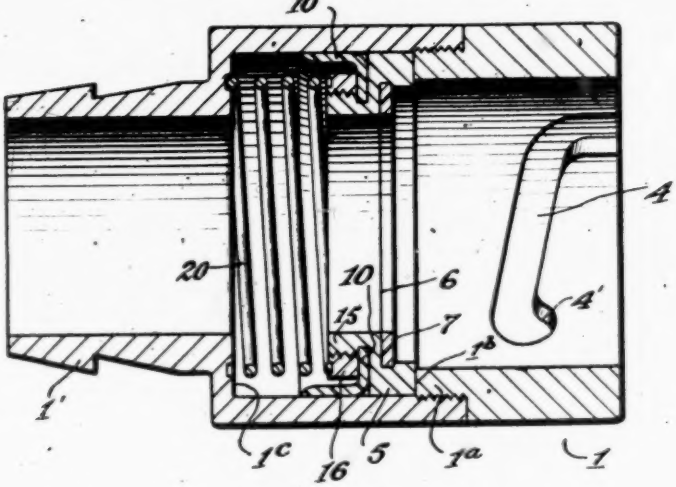

Fig. 3

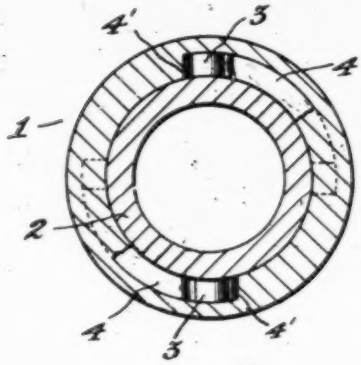

Witnesses

James E. Spiell.

Clara A. Harne

Inventor

Albert M. Barcus.

By Adams & Brooks

Attorneys

UNITED STATES PATENT OFFICE.

ALBERT M. BARCUS, OF RAYMOND, WASHINGTON.

COUPLING FOR HOSE AND THE LIKE.

1,117,762. Specification of Letters Patent. Patented Nov. 17, 1914.

Application filed February 25, 1913. Serial No. 750,582.

To all whom it may concern:

Be it known that I, ALBERT M. BARCUS, a citizen of the United States of America, and a resident of the city of Raymond, in the county of Pacific and State of Washington, have invented certain new and useful Improvements in Couplings for Hose and the like, of which the following is a specification.

My invention relates to couplings of the above type, and has for one of its objects to provide a structure wherein the parts can be readily connected and disconnected.

Another object resides in the provision of means for utilizing the pressure of the fluid in obtaining a water tight joint between the coupling parts.

My invention is adapted for connecting one section of hose or other conduit to another section or to a hydrant.

Other objects will be set forth as my description progresses, and those features of construction, arrangements and combinations of parts on which I desire protection, succinctly defined in my annexed claim.

In the accompanying drawing I have illustrated my invention as adapted for connecting two sections of hose.

In the said drawing: Figure 1 is a longitudinal section of the coupling with the parts thereof interlocked. Fig. 2 is a longitudinal section of the outer coupling part, and Fig. 3 is a transverse section on line 3—3 of Fig. 1.

Referring to the drawing by numerals of reference, 1 and 2 indicate outer and inner coupling parts respectively, these being substantially cylindrical and having suitable roughened shanks or extensions 1′, 2′ for reception of the hose sections, not shown. The inner end portion of part 2 is preferably reduced or tapered, as at 2″, to facilitate its insertion into part 1. Said part 2 is and the opposite end wall 1ᵉ of coupling part 1, I arrange a slide member 5 of open formation, this being provided on one side with a seat 6 for engagement with the adjacent end of coupling part 2. This seat is preferably faced with a packing ring 7, as shown. The opposite side face of slide member 5 is provided with an annular externally threaded boss 15 which like the body proper of member 5 is bored or open for free passage of the water from one coupling part to the other.

Reference numeral 10 indicates a cupped washer seated on slide member 5 about the annular boss 15 thereof, and held thereon by a nut 16. In thus mounting washer 10, the flexible outer edge portion 10′ extends lengthwise of coupling part 1 and will be pressed firmly outwardly against the inner face thereof by the water or other fluid.

Reference numeral 20 indicates a spiral spring interposed between wall 1ᵉ and nut 16, the same tending to press slide member 5 toward shoulder 1ᵇ, against which latter the member will rest when the coupling parts are disengaged. This spring serves to hold slide member 5 against the end of coupling part 2 when the fluid pressure is cut off, as when the parts are first coupled, thereby overcoming leakage between the parts during the initial portion of the flow incident to the opening of the cut off valve. Pressure applied to member 5 holds coupling part 2 with its lugs 3 in the depressions 4′ of its grooves 4.

Various changes can be made in the minor details of construction, as fall within the scope of my annexed claim.

Having thus described my invention what I claim as new, and desire to secure by Letters Patent of the United States of America, is:—

In a coupling, outer and inner coupling

To all whom it may concern:

Be it known that I, ALBERT M. BARCUS, a citizen of the United States of America, and a resident of the city of Raymond, in the county of Pacific and State of Washington, have invented certain new and useful Improvements in Couplings for Hose and the like, of which the following is a specification.

My invention relates to couplings of the above type, and has for one of its objects to provide a structure wherein the parts can be readily connected and disconnected.

Another object resides in the provision of means for utilizing the pressure of the fluid in obtaining a water tight joint between the coupling parts.

My invention is adapted for connecting one section of hose or other conduit to another section or to a hydrant.

Other objects will be set forth as my description progresses, and those features of construction, arrangements and combinations of parts on which I desire protection, succinctly defined in my annexed claim.

In the accompanying drawing I have illustrated my invention as adapted for connecting two sections of hose.

In the said drawing: Figure 1 is a longitudinal section of the coupling with the parts thereof interlocked. Fig. 2 is a longitudinal section of the outer coupling part, and Fig. 3 is a transverse section on line 3—3 of Fig. 1.

Referring to the drawing by numerals of reference, 1 and 2 indicate outer and inner coupling parts respectively, these being substantially cylindrical and having suitable roughened shanks or extensions 1′, 2′ for reception of the hose sections, not shown. The inner end portion of part 2 is preferably reduced or tapered, as at 2″, to facilitate its insertion into part 1. Said part 2 is also provided with lugs 3 adapted for riding in cam grooves 4 of part 1, whereby upon partial rotation of one part on the other, the coupling part 2 will be drawn inwardly until said lugs 3 reach depressions 4′, occurring at the inner end portions of the grooves. As now considered, coupling part 1 is formed of two sections arranged end to end and one thereof having a threaded annular extension 1^a in threaded engagement with the other section and projecting inwardly from the inner face thereof to provide a shoulder 1^b. Between shoulder 1^b and the opposite end wall 1^c of coupling part 1, I arrange a slide member 5 of open formation, this being provided on one side with a seat 6 for engagement with the adjacent end of coupling part 2. This seat is preferably faced with a packing ring 7, as shown. The opposite side face of slide member 5 is provided with an annular externally threaded boss 15 which like the body proper of member 5 is bored or open for free passage of the water from one coupling part to the other.

Reference numeral 10 indicates a cupped washer seated on slide member 5 about the annular boss 15 thereof, and held thereon by a nut 16. In thus mounting washer 10, the flexible outer edge portion 10′ extends lengthwise of coupling part 1 and will be pressed firmly outwardly against the inner face thereof by the water or other fluid.

Reference numeral 20 indicates a spiral spring interposed between wall 1^c and nut 16, the same tending to press slide member 5 toward shoulder 1^b, against which latter the member will rest when the coupling parts are disengaged. This spring serves to hold slide member 5 against the end of coupling part 2 when the fluid pressure is cut off, as when the parts are first coupled, thereby overcoming leakage between the parts during the initial portion of the flow incident to the opening of the cut off valve. Pressure applied to member 5 holds coupling part 2 with its lugs 3 in the depressions 4′ of its grooves 4.

Various changes can be made in the minor details of construction, as fall within the scope of my annexed claim.

Having thus described my invention what I claim as new, and desire to secure by Letters Patent of the United States of America, is:—

In a coupling, outer and inner coupling parts the former of which comprises two sections arranged end to end and one having its outer end portion formed with cam grooves and its inner end portion provided with a threaded annular extension threaded in the other section and projecting inwardly from the inner face thereof to provide an internal shoulder, the other section of said outer coupling part being formed in its opposite end portion with a second shoulder opposing the shoulder provided by the annular extension of said first named coupling section, a hollow slide member ar-

ranged in said outer coupling part and provided with a packing ring bearing against the inner face thereof, spring means interposed between the second shoulder of said outer coupling part and said slide member, said slide member being arranged between the shoulders of said outer coupling part whereby the first named shoulder thereof will limit movement of the slide member by said spring means, said inner coupling part being insertible in said outer coupling part, and normally engaging said slide member and holding the same spaced inwardly from the said first named shoulder of said first named coupling part, and lugs on said inner coupling part adapted for riding in the cam-grooves of said outer coupling part, for the purpose specified.

Signed at Raymond, Washington, this 11th day of February, 1913.

ALBERT M. BARCUS.

Witnesses:

E. S. ROBINSON,

G. E. FOIDELL.

F. D. WINKLEY.

LUBRICATING SYSTEM.

APPLICATION FILED MAY 1, 1916.

1,201,414.

Patented Oct. 17, 1916.

2 SHEETS—SHEET 1.

Fig. 1

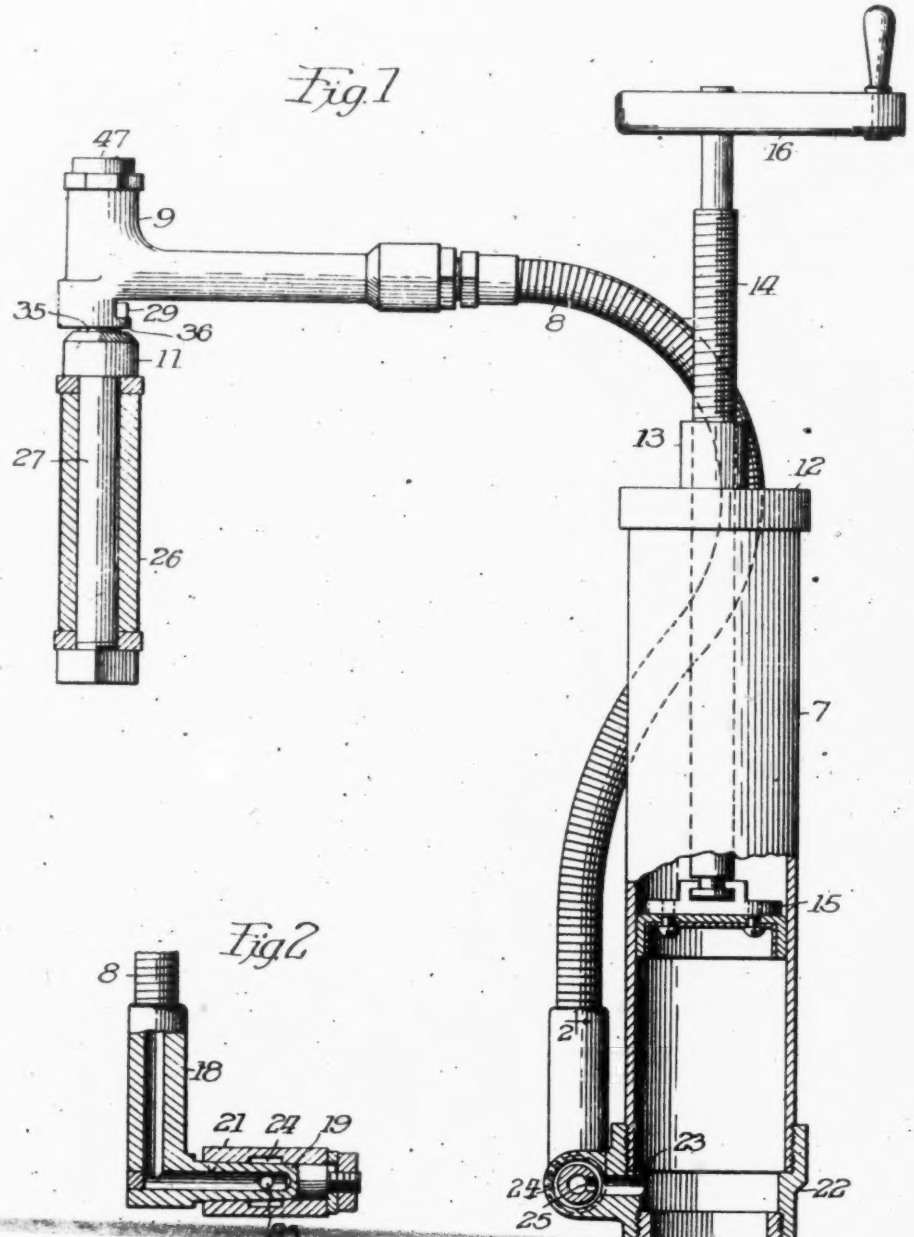

Fig. 2

1,201,414.

Patented Oct. 17, 1916.

2 SHEETS—SHEET 1.

Fig. 1.

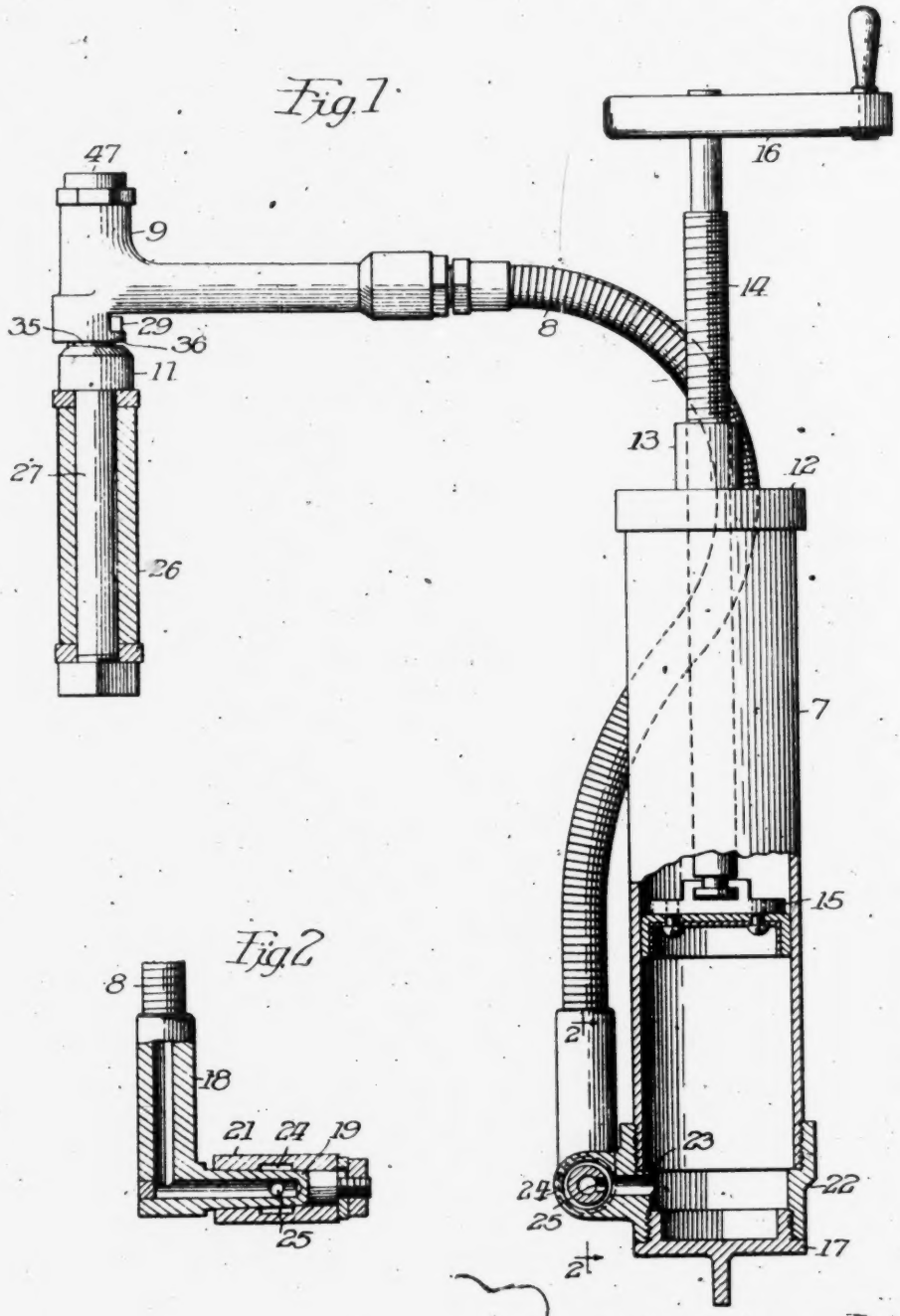

Fig. 2.

Inventor

Frank D. Winkley

By Pond & Wilson

Attys

443.

F. D. WINKLEY.

LUBRICATING SYSTEM.

APPLICATION FILED MAY 1, 1916.

1,201,414.

Patented Oct. 17, 1916.

2 SHEETS—SHEET 2.

Fig. 3

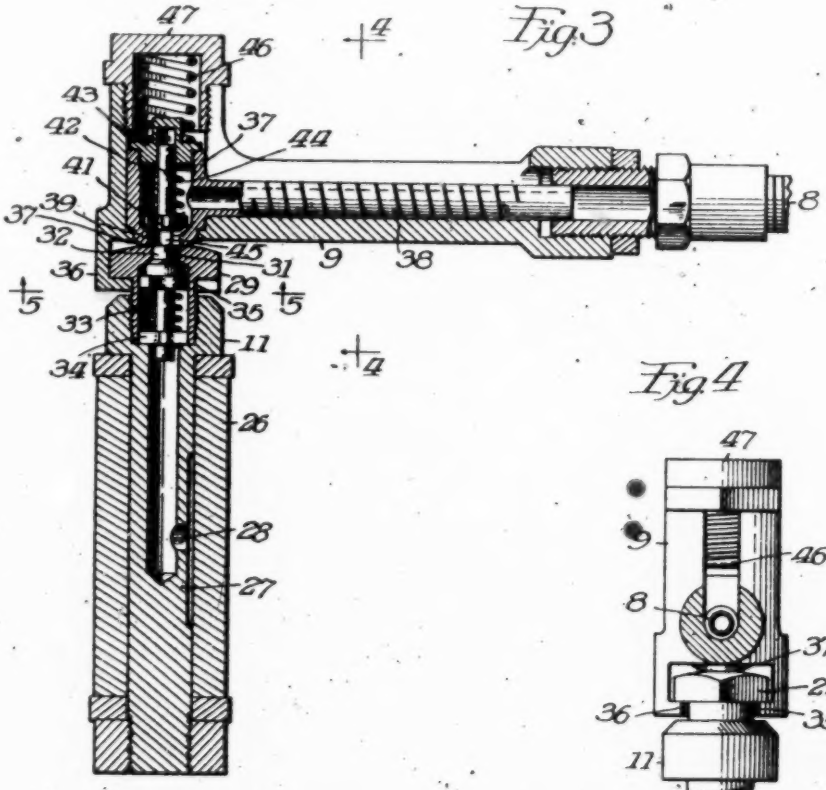

Fig. 4

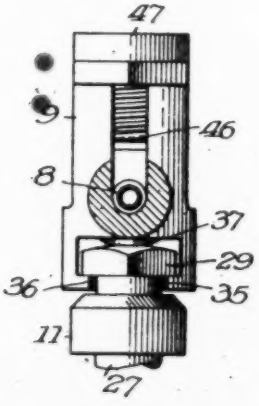

Fig. 5

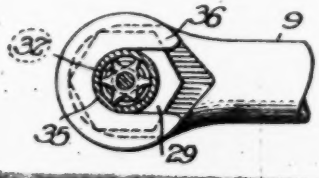

Fig. 6

F. D. WINKLEY.

LUBRICATING SYSTEM.

APPLICATION FILED MAY 1, 1916.

1,201,414.

Patented Oct. 17, 1916.

2 SHEETS—SHEET 2.

Fig. 3

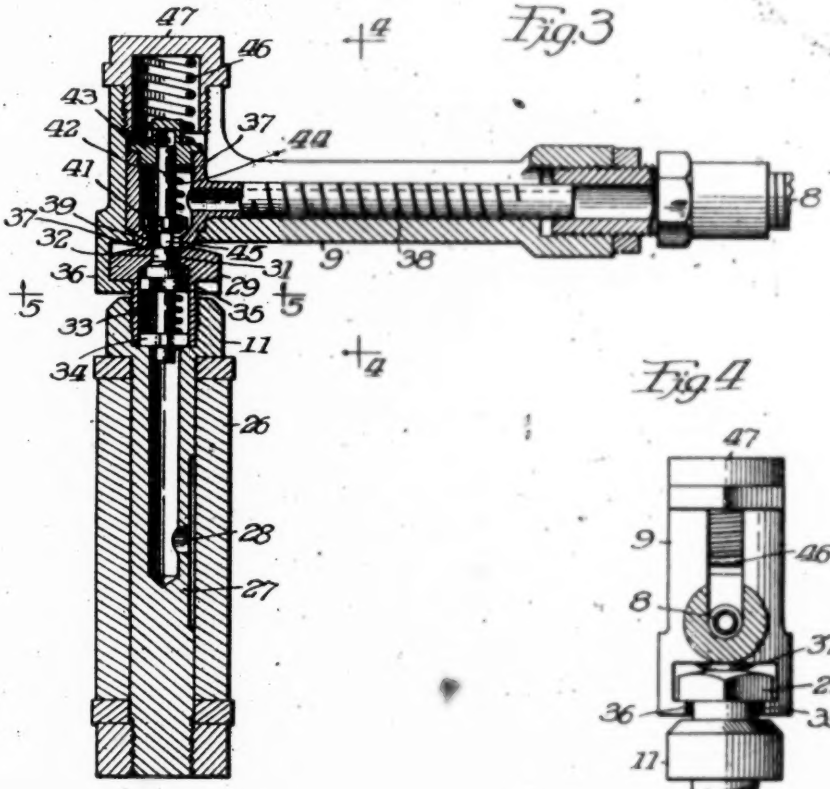

Fig. 4

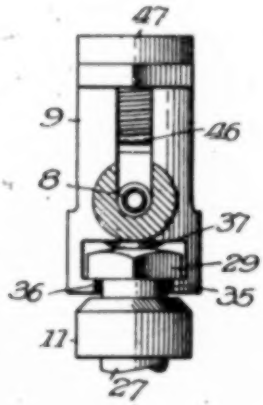

Fig. 5

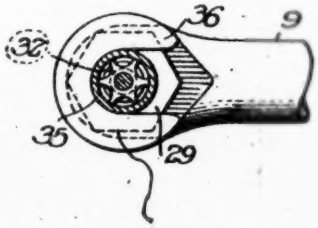

Fig. 6

Inventor

Frank D. Winkley

By Pond & Wilson

Attys

UNITED STATES PATENT OFFICE.

FRANK DREW WINKLEY, OF MADISON, WISCONSIN, ASSIGNOR TO WINKLEY & PUTNAM COMPANY, OF MADISON, WISCONSIN, A CORPORATION OF WISCONSIN.

LUBRICATING SYSTEM.

1,201,414. Specification of Letters Patent. Patented Oct. 17, 1916.

Application filed May 1, 1916. Serial No. 94,616. REISSUED

To all whom it may concern:

Be it known that I, FRANK D. WINKLEY, a citizen of the United States, residing at Madison, in the county of Dane and State of Wisconsin, have invented certain new and useful Improvements in Lubricating Systems, of which the following is a specification.

This invention relates in general to lubricating systems and has more particular reference to a system for lubricating the various minor bearings, such as the spring-bolts, brake-operating mechanism, steering mechanism, etc., of a motor car.

Prior to my invention it has been customary to equip the various bearings of this character with grease cups from which grease was delivered to the bearings by screwing down the cups. It has been found, however, that grease is not entirely suitable as a lubricant for bearings of this character for the reason that it soon becomes mixed with abrasions from the working surfaces and other foreign matter, and hardens so that it fills up the oil passages and prevents adequate lubrication of the parts.

My present invention is designed to provide a lubricating system in which a fluid lubricant may be employed and by which it may be readily forced into the bearings under pressure so as to insure an adequate lubrication of the working parts.

Another object of my invention is to provide an improved oil receptacle as a part of the bearing to be lubricated, and to provide an oil supply nozzle which can be readily attached to and detached from the oil receptacle, and which, when attached, will form an oil-tight joint through which oil may be forced into the receptacle and to the bearings.

Another object of my invention is to provide a lubricating system embodying a few

Various other objects and advantages of this invention will be readily appreciated as the same becomes better understood by reference to the following description when considered in connection with the accompanying drawings.

Referring to the drawings—Figure 1 is a side elevation, partially in section, of a lubricating system embodying my invention; Fig. 2 is a fragmentary sectional view on the line 2—2 of Fig. 1; Fig. 3 is an enlarged sectional view through the nozzle and the oil receptacle; Figs. 4 and 5 are sectional views on the lines 4—4 and 5—5 of Fig. 3; and Fig. 6 is an end view of the nozzle valve.

From the drawings it will be observed that my novel system comprises primarily an oil container 7, a flexible conduit 8 equipped with a nozzle 9, and an oil receptacle 11 which forms a part of each bearing to be oiled.

More specifically the container 7 comprises a cylinder, as shown in Fig. 1, equipped at its upper end with a cap 12 having a tapped boss 13 through which the piston rod or spindle 14 is threaded. The lower end of this rod is rotatably connected to a piston or plunger 15 and the upper end is equipped with a handle 16 by means of which the rod may be turned to move the piston longitudinally in the cylinder. The lower end of the cylinder is closed by a large removable cap 17, which may be unscrewed so that the cylinder can be filled with oil by holding it in inverted position beneath a faucet or other source of oil supply.

The flexible conduit 8 is connected with the container through a swivel joint which together with the flexibility of the conduit enables the nozzle 9 to be moved about to any desired position with respect to the container for attachment to the various oil receptacles

Application filed May 1, 1916. Serial No. 94,618.

REISSUED

To all whom it may concern:

Be it known that I, FRANK D. WINKLEY, a citizen of the United States, residing at Madison, in the county of Dane and State of Wisconsin, have invented certain new and useful Improvements in Lubricating Systems, of which the following is a specification.

This invention relates in general to lubricating systems and has more particular reference to a system for lubricating the various minor bearings, such as the spring-bolts, brake-operating mechanism, steering mechanism, etc., of a motor car.

Prior to my invention it has been customary to equip the various bearings of this character with grease cups from which grease was delivered to the bearings by screwing down the cups. It has been found, however, that grease is not entirely suitable as a lubricant for bearings of this character for the reason that it soon becomes mixed with abrasions from the working surfaces and other foreign matter, and hardens so that it fills up the oil passages and prevents adequate lubrication of the parts.

My present invention is designed to provide a lubricating system in which a fluid lubricant may be employed and by which it may be readily forced into the bearings under pressure so as to insure an adequate lubrication of the working parts.

Another object of my invention is to provide an improved oil receptacle as a part of the bearing to be lubricated, and to provide an oil supply nozzle which can be readily attached to and detached from the oil receptacle, and which, when attached, will form an oil-tight joint through which oil may be forced into the receptacle and to the bearings.

Another object of my invention is to provide a lubricating system embodying a flexible conduit and a swivel connection between the conduit and container or pressure cylinder, so that the nozzle carried by the conduit can be placed in any desired position so as to be readily attached to the oil receptacles of the various bearings on the car.

Still another object is to provide a system of this character which will be simple in construction, cheap to manufacture and easy to manipulate, and which will positively force the oil under any required pressure to the interior of the bearing to be oiled.

Various other objects and advantages of this invention will be readily appreciated as the same becomes better understood by reference to the following description when considered in connection with the accompanying drawings.

Referring to the drawings—Figure 1 is a side elevation, partially in section, of a lubricating system embodying my invention; Fig. 2 is a fragmentary sectional view on the line 2—2 of Fig. 1; Fig. 3 is an enlarged sectional view through the nozzle and the oil receptacle; Figs. 4 and 5 are sectional views on the lines 4—4 and 5—5 of Fig. 3; and Fig. 6 is an end view of the nozzle valve.

From the drawings it will be observed that my novel system comprises primarily an oil container 7, a flexible conduit 8 equipped with a nozzle 9, and an oil receptacle 11 which forms a part of each bearing to be oiled.

More specifically the container 7 comprises a cylinder, as shown in Fig. 1, equipped at its upper end with a cap 12 having a tapped boss 13 through which the piston rod or spindle 14 is threaded. The lower end of this rod is rotatably connected to a piston or plunger 15 and the upper end is equipped with a handle 16 by means of which the rod may be turned to move the piston longitudinally in the cylinder. The lower end of the cylinder is closed by a large removable cap 17, which may be unscrewed so that the cylinder can be filled with oil by holding it in inverted position beneath a faucet or other source of oil supply.

The flexible conduit 8 is connected with the container through a swivel joint which together with the flexibility of the conduit enables the nozzle 9 to be moved about to any desired position with respect to the container for attachment to the various oil receptacles on a car. By referring to Figs. 1 and 2 it will be observed that the conduit 8 emanates from a shank 18 having a laterally extending hollow trunnion 19 which is journaled in a hollow boss 21 formed integral with the bottom member 22 of the container. A passageway 23 leading from the container into the hollow boss terminates in an annular groove 24 which communicates with the interior of the trunnion 19 through a port 25.

The bearing, designated generally by reference character 26, in which my improved oil receptacle is embodied, comprises a hol-

low spindle 27 having an outlet port 28 through which oil is supplied to the surfaces to be lubricated. The upper end of the spindle, instead of being equipped with a grease cup, as has been customary prior to my invention, is provided with a head 29 which is threaded into the enlarged upper end of the spindle 27. This head has an oil receiving opening 31 in its top which is normally closed so as to exclude dust and dirt by a valve 32 which is machined to snugly fit the aperture. A coiled expansion spring 33 interposed between the lower face of the valve disk and a spider 34 disposed in the lower end of the shank 35 of the head normally retains this valve in closed position. It will be observed from Fig. 3 that the upper end of the valve lies flush with the upper face of the head so that the end of a bearing equipped with my oil receptacle presents a smooth and attractive appearance which is not complicated or disfigured by any permanent grease cup.

The free end of the flexible conduit 8 is threaded into the nozzle 9 which is shaped to provide on the bottom of its outer end a bifurcated portion 36 adapted to straddle the shank 35 of the oil receptacle head and to be engaged beneath this head, as shown in Fig. 3. Within the nozzle proper there is mounted what I term an oil cup 37 which communicates with the conduit 8 through a branch conduit 38. This cup has its lower end shaped to project outwardly beyond the plane of the nozzle proper toward the bifurcated portion 36, and this lower wall of the cup is equipped with a discharge aperture 39 which is normally closed by a valve 41 carried on a stem 42 which extends upwardly into a cap 43 threaded into the upper end of the cup. An expansion spring 44 surrounding the stem normally holds the valve in closed position, and when closed an extension 45 beneath the valve disk projects downwardly beyond the bottom of the cup. It will be observed from Fig. 6 that this extension 45 extends diametrically entirely across the discharge aperture 39 and is wider than the oil-receiving aperture 31 in the head 29 so that it will engage the head on both sides of the aperture when the nozzle the oil receptacle to which it is desired to deliver lubricant by engaging the bifurcated portion 36 of the nozzle beneath the head and sliding the nozzle transversely of the head or toward the right, viewing Fig. 3, into the position shown in this figure. The engagement of the extension 45 with the top of the head will open the valve 41 and the cup will yield upwardly against the spring 46 sufficiently to accommodate the device to heads of various thicknesses, but this spring will hold the bottom of the cup snugly against the head of the oil receptacle so as to provide an oil-tight joint at this point. After the nozzle has been attached the handle 16 is turned to force the plunger 15 downwardly in the container, thereby forcing oil under pressure through the conduit into the oil cup 37 and downwardly into the oil receptacle, the valve 32 in the receptacle being opened against the force of the spring 33 by the pressure of the inflowing oil. When sufficient lubricant has been delivered to the bearing a partial reverse rotation of the handle 16 will relieve the pressure in the cup and permit the valve 32 to close. The nozzle may then be detached from the head by slipping it off laterally, and as soon as the pressure against the extension 45 is released the valve 41 will be closed by its spring 44.

It will be obvious from the foregoing that I have provided a lubricating system in which the discharge nozzle can be very quickly attached to and detached from an oil-receiving receptacle of simple and economical construction, that the oil can be forced by my system positively into the receptacle and bearing in any desired quantities, and that when the system is not in use all leakage is precluded since the valve 41 is maintained at all times against its seat except when positively unseated by the act of attaching the nozzle to a properly constructed head.

While I prefer to equip the bearings to be lubricated with oil receptacles of the character described, to which my improved nozzle may be detachably connected, it should be obvious that the oil receptacles could be structurally independent of the

on receiving opening 31 in its top which is normally closed so as to exclude dust and dirt by a valve 32 which is machined to snugly fit the aperture. A coiled expansion spring 33 interposed between the lower face of the valve disk and a spider 34 disposed in the lower end of the shank 35 of the head normally retains this valve in closed position. It will be observed from Fig. 3 that the upper end of the valve lies flush with the upper face of the head so that the end of a bearing equipped with my oil receptacle presents a smooth and attractive appearance which is not complicated or disfigured by any permanent grease cup.

The free end of the flexible conduit 8 is threaded into the nozzle 9 which is shaped to provide on the bottom of its outer end a bifurcated portion 36 adapted to straddle the shank 35 of the oil receptacle head and to be engaged beneath this head, as shown in Fig. 3. Within the nozzle proper there is mounted what I term an oil cup 37 which communicates with the conduit 8 through a branch conduit 38. This cup has its lower end shaped to project outwardly beyond the plane of the nozzle proper toward the bifurcated portion 36, and this lower wall of the cup is equipped with a discharge aperture 39 which is normally closed by a valve 41 carried on a stem 42 which extends upwardly into a cap 43 threaded into the upper end of the cup. An expansion spring 44 surrounding the stem normally holds the valve in closed position, and when closed an extension 45 beneath the valve disk projects downwardly beyond the bottom of the cup. It will be observed from Fig. 6 that this extension 45 extends diametrically entirely across the discharge aperture 39 and is wider than the oil-receiving aperture 31 in the head 29 so that it will engage the head on both sides of the aperture when the nozzle is connected to the head.

The oil cup 37 is yieldingly mounted in the nozzle proper and is held downwardly therein with its bottom projecting beyond the plane of the nozzle proper by a relatively stiff expansion spring 46 interposed between the cap 43 of the cup and a cap 47 threaded into the top of the nozzle body. The lower end of the cup is therefore held in its lowermost position and the valve is normally maintained in closed position by the spring 44.

When it is desired to use my improved system the nozzle is attached to the head of cup will yield upwardly against the spring 46 sufficiently to accommodate the device to heads of various thicknesses, but this spring will hold the bottom of the cup snugly against the head of the oil receptacle so as to provide an oil-tight joint at this point. After the nozzle has been attached the handle 16 is turned to force the plunger 15 downwardly in the container, thereby forcing oil under pressure through the conduit into the oil cup 37 and downwardly into the oil receptacle, the valve 32 in the receptacle being opened against the force of the spring 33 by the pressure of the inflowing oil. When sufficient lubricant has been delivered to the bearing a partial reverse rotation of the handle 16 will relieve the pressure in the cup and permit the valve 32 to close. The nozzle may then be detached from the head by slipping it off laterally, and as soon as the pressure against the extension 45 is released the valve 41 will be closed by its spring 44.

It will be obvious from the foregoing that I have provided a lubricating system in which the discharge nozzle can be very quickly attached to and detached from an oil-receiving receptacle of simple and economical construction, that the oil can be forced by my system positively into the receptacle and bearing in any desired quantities, and that when the system is not in use all leakage is precluded since the valve 41 is maintained at all times against its seat except when positively unseated by the act of attaching the nozzle to a properly constructed head.

While I prefer to equip the bearings to be lubricated with oil receptacles of the character described, to which my improved nozzle may be detachably connected, it should be obvious that the oil receptacles could be structurally independent of the bearings if preferred and could be attached to the bearings at the time of oiling and detached therefrom after each oiling operation if preferred, the opening into the bearing being closed in the interim by a suitable plug.

It is believed that the construction and operation of my improved lubricating system will be understood from the foregoing without further description but it should be manifest that my invention is not restricted to the details of construction illustrated and described, as these details are capable of considerable modification and variation with-

out departing from the scope of the invention as defined in the following claims.

I claim:

1. In a lubricating system, the combination of an oil receptacle having an oil-receiving opening, a valve normally closing said opening, a nozzle adapted to be detachably connected to said receptacle so as to form a tight joint with the receptacle, said nozzle having a delivery orifice arranged to aline with said opening in the receptacle when the receptacle and nozzle are connected, a valve mounted in said nozzle and constructed to be opened when the nozzle is connected to the receptacle, and means for supplying lubricant to said nozzle.

2. In a lubricating system, the combination of an oil receptacle having an oil-receiving opening, a valve normally closing said opening, a nozzle having an oil cup yieldingly mounted therein, said oil cup being provided with a delivery orifice, a valve normally closing said orifice, means whereby said nozzle and oil receptacle may be detachably connected together, and means for supplying lubricant to said oil cup.

3. In a lubricating system, the combination of an oil receptacle provided with a valved head, a nozzle provided with a bifurcated portion adapted to engage beneath said head, an oil cup yieldingly mounted in said nozzle and normally urged into engagement with said head when the parts are connected so as to form a tight joint between said head and the cup, and means for delivering lubricant through said cup to said receptacle.

4. In a lubricating system, the combination of an oil receptacle provided with a valved oil-receiving opening, a nozzle provided with a bifurcated portion and an oil cup having a discharge orifice yieldingly urged toward said bifurcated portion, a valve normally closing the discharge orifice from said cup, said valve being constructed to be opened when said nozzle is connected to said receptacle, and means for supplying lubricant to said nozzle.

5. In a lubricating system, the combination of a nozzle provided with means for detachably connecting the same to an oil receptacle, a cup yieldingly mounted in said nozzle and provided with a discharge orifice, a valve normally closing said orifice and having an extension through the orifice by which the valve is opened when the nozzle is connected to an oil receptacle, and means for supplying lubricant to said cup.

6. In a lubricating system, the combination of a nozzle comprising a yieldingly mounted oil-delivery device provided with a discharge orifice, a valve normally closing said orifice, and means for attaching said nozzle to an oil receptacle and simultaneously opening said valve.

7. In a lubricating system, the combination of a container, a flexible conduit connected to said container, a nozzle carried by the free end of said flexible conduit, a normally closed valve controlling the discharge orifice from said nozzle, and an oil receptacle constructed for detachable connection to said nozzle, said receptacle being adapted to open said nozzle valve when connection between the nozzle and said receptacle is established.

8. In a lubricating system, the combination of a container, a flexible conduit, a swivel connection between said conduit and said container, a headed oil receptacle, and a valve nozzle carried by said conduit and constructed for detachable locking connection with said oil receptacle, by movement of said nozzle transversely of the receptacle.

FRANK DREW WINKLEY.

Witnesses:
A. S. MERZ,
L. T. TIERNEY.

447

F. D. WINKLEY.

LUBRICATING SYSTEM.

APPLICATION FILED OCT. 7, 1918.

Reissued June 10, 1919.

14,667.

2 SHEETS—SHEET 1.

Fig. 1

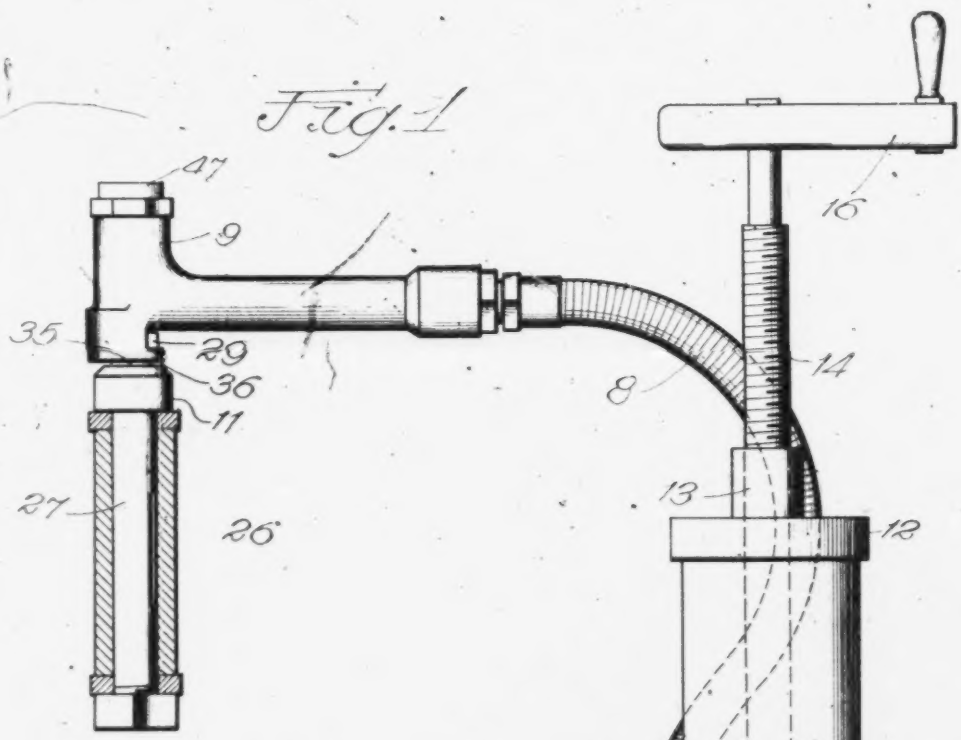

Fig. 2

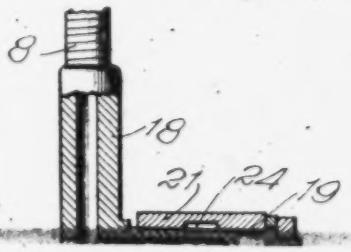

Fig. 1

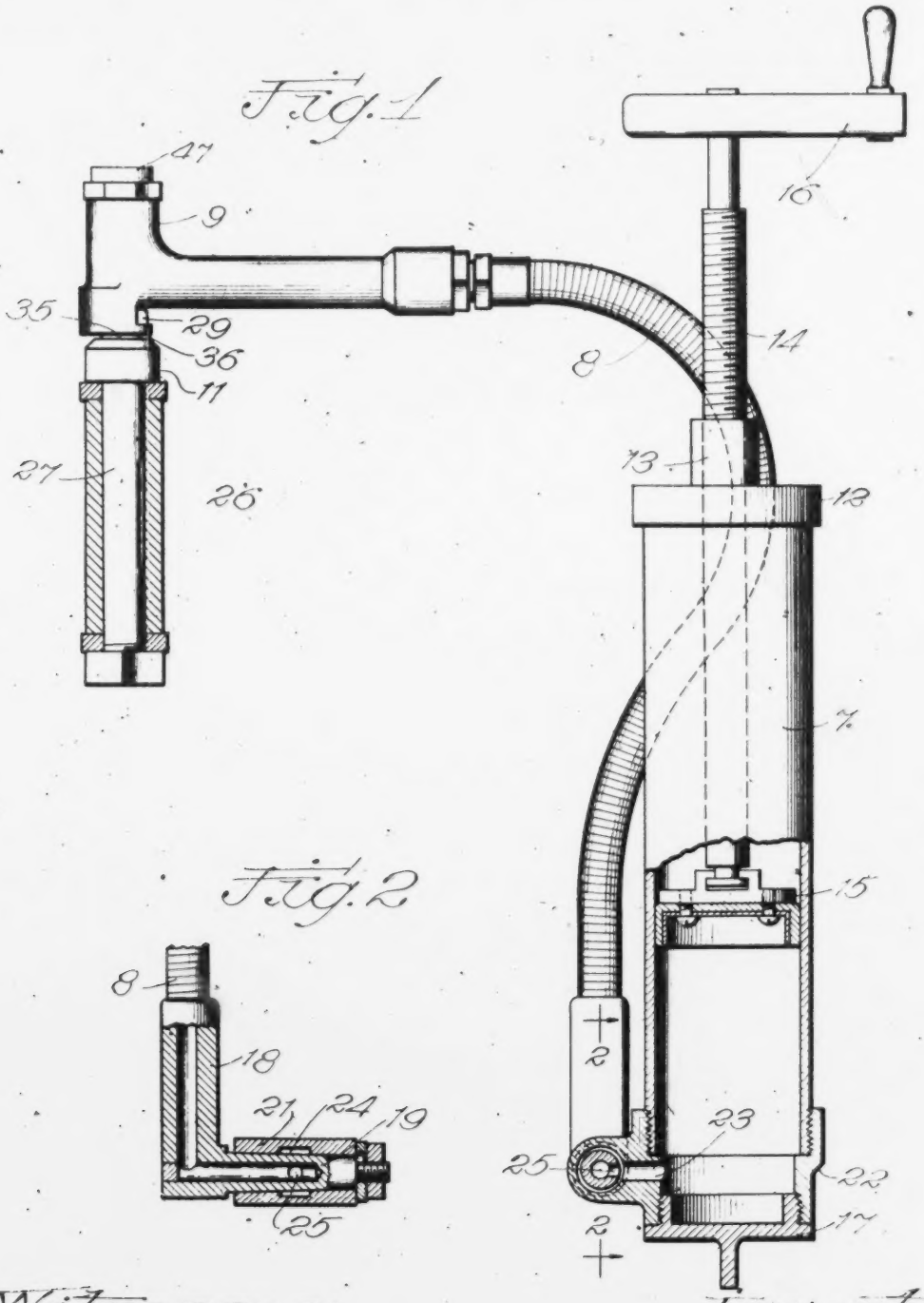

Fig. 2

Witnesses:
Andrew Winterrowd.
Earl A. Pierce

Inventor
Frank D. Winkley
By Williams, Bradbury & Lee
Attys.

F. D. WINKLEY.

LUBRICATING SYSTEM.

APPLICATION FILED OCT. 7, 1918.

Reissued June 10, 1919.

14,667.

2 SHEETS—SHEET 2.

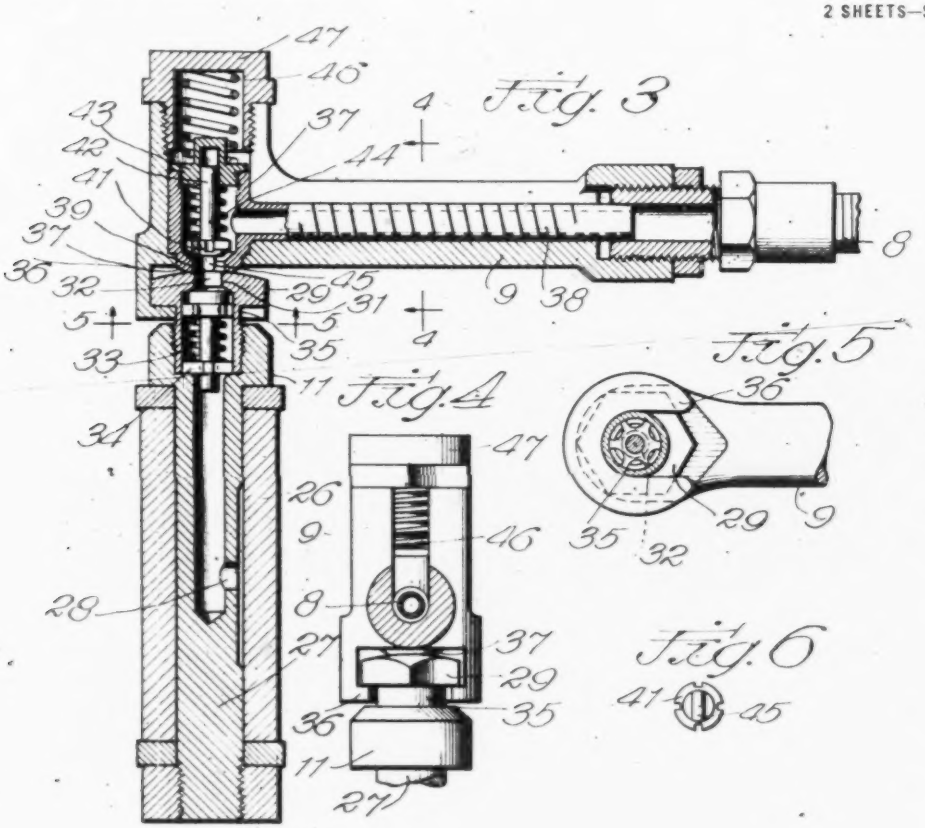

Fig. 3

Fig. 4

Fig. 5

Fig. 6

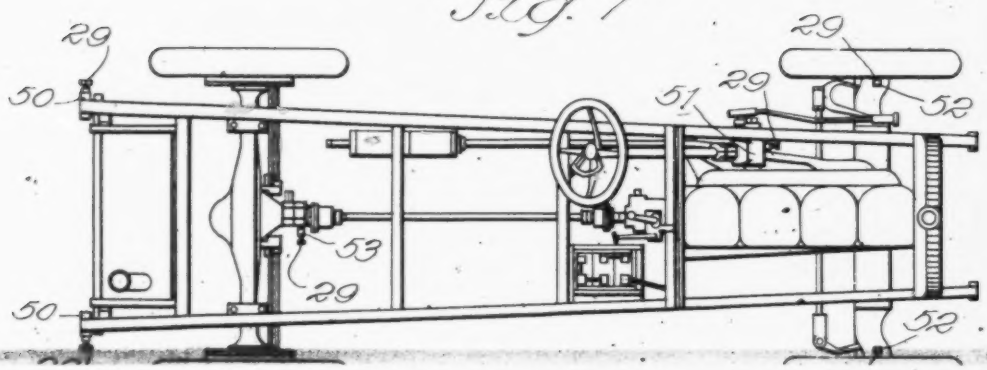

Fig. 7

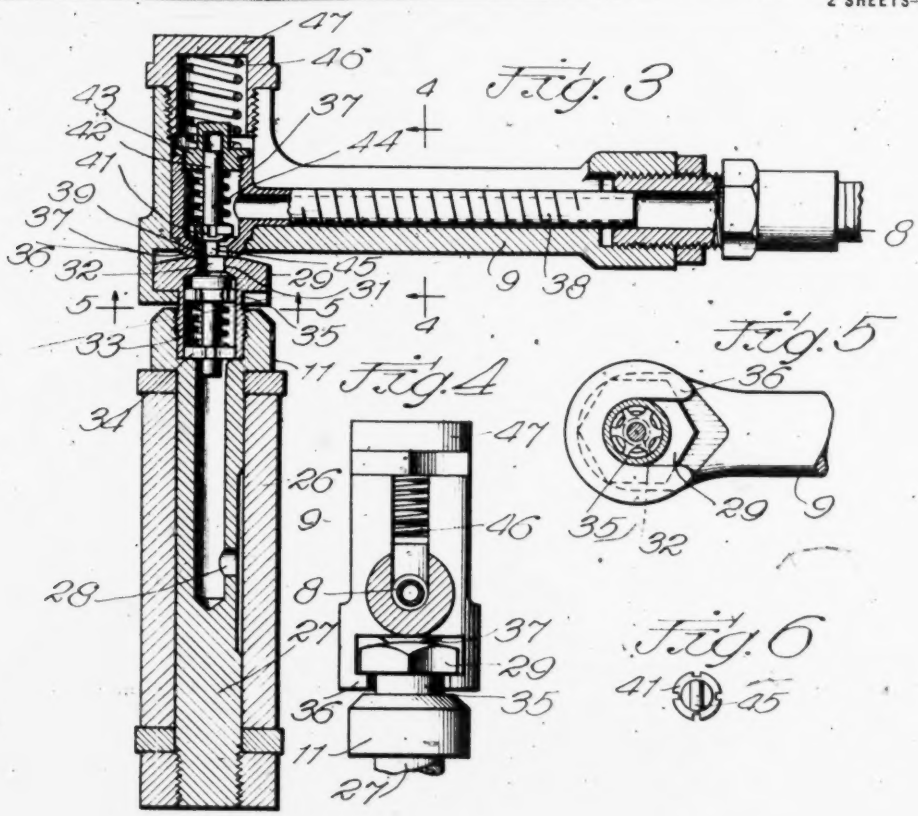

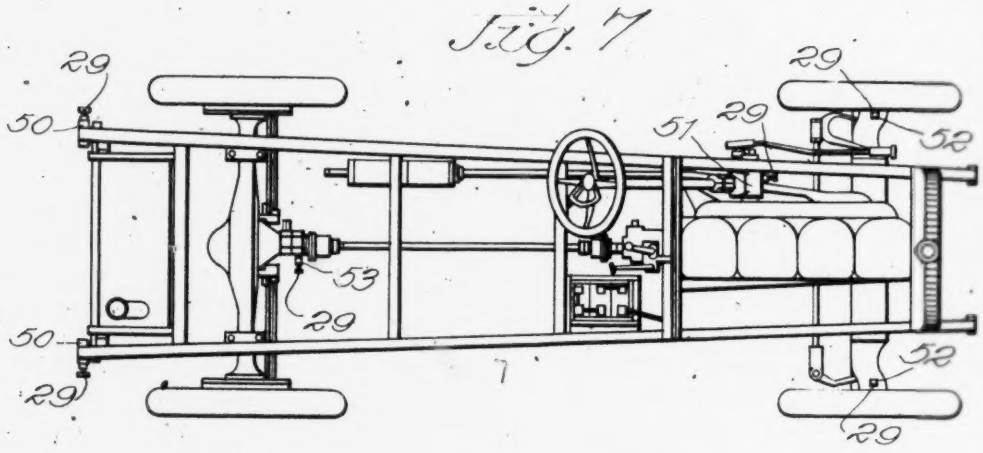

Witnesses:
Andrew Wintercorn
Earl F. Pierce

Inventor
Frank D. Winkley
By Williams, Bradbury & Lee
Attys.

UNITED STATES PATENT OFFICE.

FRANK D. WINKLEY, OF MADISON, WISCONSIN.

LUBRICATING SYSTEM.

14,667. Specification for Reissued Letters Patent. Reissued June 10, 1919.

Original No. 1,201,414, dated October 17, 1916, Serial No. 94,616, filed May 1, 1916. Application for reissue filed October 7, 1918. Serial No. 257,200.

To all whom it may concern:

Be it known that I, FRANK D. WINKLEY, a citizen of the United States, residing at Madison, in the county of Dane and State of Wisconsin, have invented certain new and useful Improvements in Lubricating Systems, of which the following is a specification.

This invention relates in general to lubricating systems and has more particular reference to a system for lubricating the various minor bearings, such as the spring-bolts, brake-operating mechanism, steering mechanism, etc., of a motor car.

Prior to my invention it has been customary to equip the various bearings of this character with grease cups from which grease was delivered to the bearings by screwing down the cups. It has been found, however, that grease is not entirely suitable as a lubricant for bearings of this character for the reason that it soon becomes mixed with abrasions from the working surfaces and other foreign matter, and hardens so that it fills up the oil passages and prevents adequate lubrication of the parts.

My present invention is designed to provide a lubricating system in which a fluid lubricant may be employed and by which it may be readily forced into the bearings under pressure so as to insure an adequate lubrication of the working parts.

Another object of my invention is to provide an improved oil receptacle as a part of the bearing to be lubricated, and to provide an oil supply nozzle which can be readily attached to and detached from the oil receptacle, and which, when attached, will form an oil-tight joint through which oil may be forced into the receptacle and to the bearings.

Various other objects and advantages of this invention will be readily appreciated as the same becomes better understood by reference to the following description when considered in connection with the accompanying drawings. Referring to the drawings—

Figure 1 is a side elevation partially in section, of a lubricating system embodying my invention;

Fig. 2 is a fragmentary section view on the line 2—2 of Fig. 1,

Fig. 3 is an enlarged sectional view through the nozzle and the oil receptacle,

Figs. 4 and 5 are sectional views on the lines 4—4 and 5—5 of Fig. 3,

Fig. 6 is an end view of the nozzle valve, and

Fig. 7 is a conventional plan view of an automobile chassis equipped with my lubricating system.

From the drawings it will be observed that my novel system comprises primarily an oil container or pump 7, a flexible conduit 8 equipped with a nozzle 9, and an oil receptacle 11 which forms a part of each bearing to be oiled.

More specifically the container 7 comprises a cylinder, as shown in Fig. 1, equipped at its upper end with a cap 12 having a tapped boss 13 through which the piston rod or spindle 14 is threaded. The lower end of this rod is rotatably connected to a piston or plunger 15 and the upper end is equipped with a handdle 16 by means of which the rod may be turned to move the piston longitudinally in the cylinder. The lower end of the cylinder is closed by a large removable cap 17, which may be unscrewed so that the cylinder can be filled with oil by holding it in inverted position beneath a [illegible]

Original No. 1,301,414, dated October 17, 1916, Serial No. [illegible]
filed October 7, 1918. Serial No. 257,300.

To all whom it may concern:

Be it known that I, FRANK D. WINKLEY, a citizen of the United States, residing at Madison, in the county of Dane and State of Wisconsin, have invented certain new and useful Improvements in Lubricating Systems, of which the following is a specification.

This invention relates in general to lubricating systems and has more particular reference to a system for lubricating the various minor bearings, such as the spring-bolts, brake-operating mechanism, steering mechanism, etc., of a motor car.

Prior to my invention it has been customary to equip the various bearings of this character with grease cups from which grease was delivered to the bearings by screwing down the cups. It has been found, however, that grease is not entirely suitable as a lubricant for bearings of this character for the reason that it soon becomes mixed with abrasions from the working surfaces and other foreign matter, and hardens so that it fills up the oil passages and prevents adequate lubrication of the parts.

My present invention is designed to provide a lubricating system in which a fluid lubricant may be employed and by which it may be readily forced into the bearings under pressure so as to insure an adequate lubrication of the working parts.

Another object of my invention is to provide an improved oil receptacle as a part of the bearing to be lubricated, and to provide an oil supply nozzle which can be readily attached to and detached from the oil receptacle, and which, when attached, will form an oil-tight joint through which oil may be forced into the receptacle and to the bearings.

Another object of my invention is to provide a lubricating system embodying a flexible conduit and a swivel connection between the conduit and container or pressure cylinder, so that the nozzle carried by the conduit can be placed in any desired position so as to be readily attached to the oil receptacles of the various bearings on the car.

Still another object is to provide a system of this character which will be simple in construction, cheap to manufacture and easy to manipulate, and which will positively force the oil under any required pressure to the interior of the bearing to be oiled.

Various other objects and advantages of this invention will be readily appreciated as the same becomes better understood by reference to the following description when considered in connection with the accompanying drawings. Referring to the drawings—

Figure 1 is a side elevation partially in section, of a lubricating system embodying my invention;

Fig. 2 is a fragmentary section view on the line 2—2 of Fig. 1,

Fig. 3 is an enlarged sectional view through the nozzle and the oil receptacle,

Figs. 4 and 5 are sectional views on the lines 4—4 and 5—5 of Fig. 3,

Fig. 6 is an end view of the nozzle valve, and

Fig. 7 is a conventional plan view of an automobile chassis equipped with my lubricating system.

From the drawings it will be observed that my novel system comprises primarily an oil container or pump 7, a flexible conduit 8 equipped with a nozzle 9, and an oil receptacle 11 which forms a part of each bearing to be oiled.

More specifically the container 7 comprises a cylinder, as shown in Fig. 1, equipped at its upper end with a cap 12 having a tapped boss 13 through which the piston rod or spindle 14 is threaded. The lower end of this rod is rotatably connected to a piston or plunger 15 and the upper end is equipped with a handdle 16 by means of which the rod may be turned to move the piston longitudinally in the cylinder. The lower end of the cylinder is closed by a large removable cap 17, which may be unscrewed so that the cylinder can be filled with oil by holding it in inverted position beneath a faucet or other source of oil supply.

The flexible conduit 8 is connected with the container through a swivel joint which together with the flexibility of the conduit enables the nozzle 9 to be moved about to any desired position with respect to the container for attachment to the various oil receptacles on a car. By referring to Figs. 1 and 2 it will be observed that the conduit 8 emanates from a shank 18 having a laterally extending hollow trunnion 19 which is journaled in a hollow boss 21 formed integral with the bottom member 22 of the container. A passageway 23 leading from the container

into the hollow boss terminates in an annular groove 24 which communicates with the interior of the trunnion 19 through a port 25.

The bearing, designated generally by reference character 26, in which my improved oil receptacle is embodied, comprises a hollow spindle 27 having an outlet port 28 through which oil is supplied to the surfaces to be lubricated. The upper end of the spindle, instead of being equipped with a grease cup, as has been customary prior to my invention, is provided with a head 29 which is threaded into the enlarged upper end of the spindle 27. This head has an oil receiving opening 31 in its top which is normally closed so as to exclude dust and dirt by a valve 32 which is machined to snugly fit the aperture. A coiled expansion spring 33 interposed between the lower face of the valve disk and a spider 34 disposed in the lower end of the shank 35 of the head normally retains this valve in closed position. It will be observed from Fig. 3 that the upper end of the valve lies flush with the upper face of the head so that the end of a bearing equipped with my oil receptacle presents a smooth and attractive appearance which is not complicated or disfigured by any permanent grease cup.

The free end of the flexible conduit 8 is threaded into the nozzle 9 which is shaped to provide on the bottom of its outer end a bifurcated portion 36 adapted to straddle the shank 35 of the oil receptacle head and to be engaged beneath this head, as shown in Fig. 3. Within the nozzle proper there is mounted what I term an oil cup 37 which communicates with the conduit 8 through a branch conduit 38. This cup has its lower end shaped to project outwardly beyond the plane of the nozzle proper toward the bifurcated portion 36, and this lower wall of the cup is equipped with a discharge aperture 39 which is normally closed by a valve 41 carried on a stem 42 which extends upwardly into a cap 43 threaded into the upper end of the cup. An expansion spring 44 surrounding the stem normally holds the valve in closed position, and when closed an exten- [illegible] threaded into the top of the nozzle body. The lower end of the cup is therefore held in its lowermost position and the valve is normally maintained in closed position by the spring 44.

When it is desired to use my improved system the nozzle is attached to the head of the oil receptacle to which it is desired to deliver lubricant by engaging the bifurcated portion 36 of the nozzle beneath the head and sliding the nozzle transversely of the head or toward the right, viewing Fig. 3, into the position shown in this figure. The engagement of the extension 45 with the top of the head will open the valve 41 and the cup will yield upwardly against the spring 46 sufficiently to accommodate the device to heads of various thicknesses, but this spring will hold the bottom of the cup snugly against the head of the oil receptacle so as to provide an oil-tight joint at this point. After the nozzle has been attached the handle 16 is turned to force the plunger 15 downwardly in the container, thereby forcing oil under pressure through the conduit into the oil cup 36 and downwardly into the oil receptacle, the valve 32 in the receptacle being opened against the force of the spring 33 by the pressure of the inflowing oil. When sufficient lubricant has been delivered to the bearing a partial reverse rotation of the handle 16 will relieve the pressure in the cup and permit the valve 32 to close. The nozzle may then be detached from the head by slipping it off laterally, and as soon as the pressure against the extension 45 is released the valve 41 will be closed by its spring 44.

In Fig. 7 I have illustrated a conventional form of an automobile chassis equipped with my lubricating system. In this figure the spring-bolts 50, steering mechanism 51, steering knuckles 52, and propeller shaft bearing 53 are shown equipped with my lubricant heads 29. It is, of course, obvious that these lubricating heads may be used at any other points on the machine where it is desired to supply a lubricant to a bearing.

It will be obvious from the foregoing that I have provided a lubricating system in which the discharge nozzle can be very quickly attached to and detached from an

through which oil is supplied to the surfaces to be lubricated. The upper end of the spindle, instead of being equipped with a grease cup, as has been customary prior to my invention, is provided with a head 29 which is threaded into the enlarged upper end of the spindle 27. This head has an oil receiving opening 31 in its top which is normally closed so as to exclude dust and dirt by a valve 32 which is machined to snugly fit the aperture. A coiled expansion spring 33 interposed between the lower face of the valve disk and a spider 34 disposed in the lower end of the shank 35 of the head normally retains this valve in closed position. It will be observed from Fig. 3 that the upper end of the valve lies flush with the upper face of the head so that the end of a bearing equipped with my oil receptacle presents a smooth and attractive appearance which is not complicated or disfigured by any permanent grease cup.

The free end of the flexible conduit 8 is threaded into the nozzle 9 which is shaped to provide on the bottom of its outer end a bifurcated portion 36 adapted to straddle the shank 35 of the oil receptacle head and to be engaged beneath this head, as shown in Fig. 3. Within the nozzle proper there is mounted what I term an oil cup 37 which communicates with the conduit 8 through a branch conduit 38. This cup has its lower end shaped to project outwardly beyond the plane of the nozzle proper toward the bifurcated portion 36, and this lower wall of the cup is equipped with a discharge aperture 39 which is normally closed by a valve 41 carried on a stem 42 which extends upwardly into a cap 43 threaded into the upper end of the cup. An expansion spring 44 surrounding the stem normally holds the valve in closed position, and when closed an extension 45 beneath the valve disk projects downwardly beyond the bottom of the cup. It will be observed from Fig. 6 that this extension 45 extends diametrically entirely across the discharge aperture 39 and is wider than the oil-receiving aperture 31 in the head 29 so that it will engage the head on both sides of the aperture when the nozzle is connected to the head.

The oil cup 37 is yieldingly mounted in the nozzle proper and is held downwardly therein with its bottom projecting beyond the plane of the nozzle proper by a relatively stiff expansion spring 46 interposed between the cap 43 of the cup and a cap 47

liver lubricant by engaging the bifurcated portion 36 of the nozzle beneath the head and sliding the nozzle transversely of the head or toward the right, viewing Fig. 3, into the position shown in this figure. The engagement of the extension 45 with the top of the head will open the valve 41 and the cup will yield upwardly against the spring 46 sufficiently to accommodate the device to heads of various thicknesses, but this spring will hold the bottom of the cup snugly against the head of the oil receptacle so as to provide an oil-tight joint at this point. After the nozzle has been attached the handle 16 is turned to force the plunger 15 downwardly in the container, thereby forcing oil under pressure through the conduit into the oil cup 36 and downwardly into the oil receptacle, the valve 32 in the receptacle being opened against the force of the spring 33 by the pressure of the inflowing oil. When sufficient lubricant has been delivered to the bearing a partial reverse rotation of the handle 16 will relieve the pressure in the cup and permit the valve 32 to close. The nozzle may then be detached from the head by slipping it laterally, and as soon as the pressure against the extension 45 is released the valve 41 will be closed by its spring 44.

In Fig. 7 I have illustrated a conventional form of an automobile chassis equipped with my lubricating system. In this figure the spring-bolts 50, steering mechanism 51, steering knuckles 52, and propeller shaft bearing 53 are shown equipped with my lubricant heads 29. It is, of course, obvious that these lubricating heads may be used at any other points on the machine where it is desired to supply a lubricant to a bearing.

It will be obvious from the foregoing that I have provided a lubricating system in which the discharge nozzle can be very quickly attached to and detached from an oil-receiving receptacle of simple and economical construction, that the oil can be forced by my system positively into the receptacle and bearing in any desired quantities, and that when the system is not in use all leakage is precluded since the valve 41 is maintained at all times against its seat except when positively unseated by the act of attaching the nozzle to a properly constructed head. While I prefer to equip the bearings to be lubricated with oil receptacles of the character described, to which my improved nozzle may be detachably connected, it should be obvious that the oil re-

ceptacles could be structurally independent of the bearings if preferred and could be attached to the bearings at the time of oiling and detached therefrom after each oiling operation if preferred, the opening into the bearing being closed in the interim by a suitable plug.

It is believed that the construction and operation of my improved lubricating system will be understood from the foregoing without further description. While I have described my invention as particularly useful for supplying fluid lubricants to the bearings of mechanism it is, of course, obvious and to be understood that my invention is not limited to the use of the more fluid lubricants but can be employed for delivering any of the less fluid lubricants to a bearing. It is only necessary that the lubricant be sufficiently fluid to permit it to be discharged from the pump or container 7 into the head or receptacle 29. It should be also manifest that my invention is not restricted to the details of construction illustrated and described, as these details are capable of considerable modification and variation without departing from the scope of the invention as defined in the following claims:

I claim:

1. In a lubricating system, the combination of an oil receptacle having an oil-receiving opening, a valve normally closing said opening, a nozzle adapted to be detachably connected to said receptacle so as to form a tight joint with the receptacle, said nozzle having a delivery orifice arranged to aline with said opening in the receptacle when the receptacle and nozzle are connected, a valve mounted in said nozzle and constructed to be opened when the nozzle is connected to the receptacle, and means for supplying lubricant to said nozzle.

2. In a lubricating system, the combination of an oil receptacle having an oil-receiving opening, a valve normally closing said opening, a nozzle having an oil cup yieldingly mounted therein, said oil cup being provided with a delivery orifice, a valve normally closing said orifice, means whereby

tion of an oil receptacle provided with a valved oil-receiving opening, a nozzle provided with a bifurcated portion having a discharge orifice and an oil cup yieldingly urged toward said bifurcated portion, a valve normally closing the discharge orifice from said cup, said valve being constructed to be opened when said nozzle is connected to said receptacle, and means for supplying lubricant to said nozzle.

5. In a lubricating system, the combination of a nozzle provided with means for detachably connecting the same to an oil receptacle, a cup yieldingly mounted in said nozzle and provided with a discharge orifice, a valve normally closing said orifice and having an extension through the orifice by which the valve is opened when the nozzle is connected to an oil receptacle, and means for supplying lubricant to said cup.

6. In a lubricating system, the combination of a nozzle comprising a yieldingly mounted oil-delivery device provided with a discharge orifice, a valve normally closing said orifice, and means for attaching said nozzle to an oil receptacle and simultaneously opening said valve.

7. In a lubricating system, the combination of a container, a flexible conduit connected to said container, a nozzle carried by the free end of said flexible conduit, a normally closed valve controlling the discharge orifice from said nozzle, and an oil receptacle constructed for detachable connection to said nozzle, said receptacle being adapted to open said nozzle valve when connection between the nozzle and said receptacle is established.

8. In a lubricating system, the combination of a container, a flexible conduit, a swivel connection between said conduit and said container, a headed oil receptacle, and a valve nozzle carried by said conduit and constructed for detachable locking connection with said oil receptacle by movement of said nozzle transversely of the receptacle.

9. The combination with a lubricant receptacle, of means for supplying lubricant thereto comprising a conduit, coacting means on said receptacle and said conduit

operation of my improved lubricating system will be understood from the foregoing without further description. While I have described my invention as particularly useful for supplying fluid lubricants to the bearings of mechanism it is, of course, obvious and to be understood that my invention is not limited to the use of the more fluid lubricants but can be employed for delivering any of the less fluid lubricants to a bearing. It is only necessary that the lubricant be sufficiently fluid to permit it to be discharged from the pump or container 7 into the head or receptacle 29. It should be also manifest that my invention is not restricted to the details of construction illustrated and described, as these details are capable of considerable modification and variation without departing from the scope of the invention as defined in the following claims.

I claim:

1. In a lubricating system, the combination of an oil receptacle having an oil-receiving opening, a valve normally closing said opening, a nozzle adapted to be detachably connected to said receptacle so as to form a tight joint with the receptacle, said nozzle having a delivery orifice arranged to aline with said opening in the receptacle when the receptacle and nozzle are connected, a valve mounted in said nozzle and constructed to be opened when the nozzle is connected to the receptacle, and means for supplying lubricant to said nozzle.

2. In a lubricating system, the combination of an oil receptacle having an oil-receiving opening, a valve normally closing said opening, a nozzle having an oil cup yieldingly mounted therein, said oil cup being provided with a delivery orifice, a valve normally closing said orifice, means whereby said nozzle and oil receptacle may be detachably connected together, and means for supplying lubricant to said oil cup.

3. In a lubricating system, the combination of an oil receptacle provided with a valved head, a nozzle provided with a bifurcated portion adapted to engage beneath said head, an oil cup yieldingly mounted in said nozzle and normally urged into engagement with said head when the parts are connected so as to form a tight joint between said head and the cup, and means for delivering lubricant through said cup to said receptacle.

4. In a lubricating system, the combination of a nozzle provided with means for detachably connecting the same to an oil receptacle, a cup yieldingly mounted in said nozzle and provided with a discharge orifice, a valve normally closing said orifice and having an extension through the orifice by which the valve is opened when the nozzle is connected to an oil receptacle, and means for supplying lubricant to said cup.

5. In a lubricating system, the combination of a nozzle provided with means for detachably connecting the same to an oil receptacle, a cup yieldingly mounted in said nozzle and provided with a discharge orifice, a valve normally closing said orifice and having an extension through the orifice by which the valve is opened when the nozzle is connected to an oil receptacle, and means for supplying lubricant to said cup.

6. In a lubricating system, the combination of a nozzle comprising a yieldingly mounted oil-delivery device provided with a discharge orifice, a valve normally closing said orifice, and means for attaching said nozzle to an oil receptacle and simultaneously opening said valve.

7. In a lubricating system, the combination of a container, a flexible conduit connected to said container, a nozzle carried by the free end of said flexible conduit, a normally closed valve controlling the discharge orifice from said nozzle, and an oil receptacle constructed for detachable connection to said nozzle, said receptacle being adapted to open said nozzle valve when connection between the nozzle and said receptacle is established.

8. In a lubricating system, the combination of a container, a flexible conduit, a swivel connection between said conduit and said container, a headed oil receptacle, and a valve nozzle carried by said conduit and constructed for detachable locking connection with said oil receptacle by movement of said nozzle transversely of the receptacle.

9. The combination with a lubricant receptacle, of means for supplying lubricant thereto comprising a conduit, coacting means on said receptacle and said conduit for detachably connecting one end of said conduit with said lubricant receptacle comprising two relatively movable parts, one of said parts serving to secure said conduit to said receptacle and the other of said parts sealing the joint between said conduit and said receptacle, and means connected with the other end of said conduit for supplying lubricant thereto.

10. The combination with a lubricant receptacle, of means for supplying lubricant thereto comprising a conduit, means for detachably connecting one end of said conduit with said receptacle comprising a member secured to said conduit and a second mem-

ber movable relatively to said first named member for contacting with an outer surface of said receptacle to maintain a fluid tight connection between said receptacle and said conduit.

11. The combination with a mechanism comprising a variety of bearings located at different points thereof, each bearing being provided with an aperture for receiving lubricant, of means for supplying lubricant to said apertures comprising a flexible conduit, means for successively attaching one end of said conduit with said apertures, and means for supplying lubricant under pressure to the other end of said conduit.

12. The combination with a lubricant receptacle of means for supplying lubricant thereto, under pressure, comprising a conduit having means for detachably securing it to said receptacle, a perforated member yieldably mounted in said first-named means for contacting with one end of said receptacle to seal the connection between said conduit and said receptacle, and spring means for yieldingly holding said yieldably-mounted means in contact with said receptacle

13. The combination with a lubricant receptacle of means for supplying lubricant thereto under pressure, comprising a conduit having means for detachably securing it to said receptacle, a perforated member yieldably mounted in said first-named means, for contacting with said receptacle to seal the connection between said conduit and said receptacle, and spring means for yieldingly holding said yieldably-mounted means in contact with said receptacle.

14. The combination with a lubricant receptacle of means for supplying lubricant thereto under pressure, comprising a conduit having means for detachably securing it to said receptacle, and a perforated member yieldably mounted in said first-named means for contacting with said receptacle to seal the connection between said conduit and said receptacle.

15. The combination with a lubricant receptacle of means for supplying lubricant thereto under pressure comprising a conduit having means for detachably securing it to said receptacle, and a yieldable member for contacting with said receptacle and sealing the connection between said receptacle and said conduit.

16. The combination with a mechanism comprising a variety of bearings located at different points thereof, each bearing being provided with a lubricant receptacle, of means for supplying lubricant to said receptacles comprising a flexible conduit, means for successively attaching one end of said conduit with said receptacles, and means for supplying lubricant to the other end of said conduit under pressure.

17. The combination with a mechanism comprising a variety of bearings located at different points thereof and at different angles, each bearing being provided with an aperture for receiving lubricant, of means for supplying lubricant to said apertures comprising a conduit adapted to be flexed to reach the said apertures, quick detachable means for successively attaching one end of said conduit with said apertures comprising means for sealing the connection between said conduit and said bearings against the escape of lubricant, and means attached to the other end of said conduit for supplying lubricant thereto under pressure.

FRANK D. WINKLEY.

NO. 1,301,733

INVENTOR

A. V. Gulborg

PATENTED

June 24, 1919

453.

A. V. GULLBORG.

LUBRICATING APPARATUS.

APPLICATION FILED FEB. 11, 1918.

1,307,733.

Patented June 24, 1919.

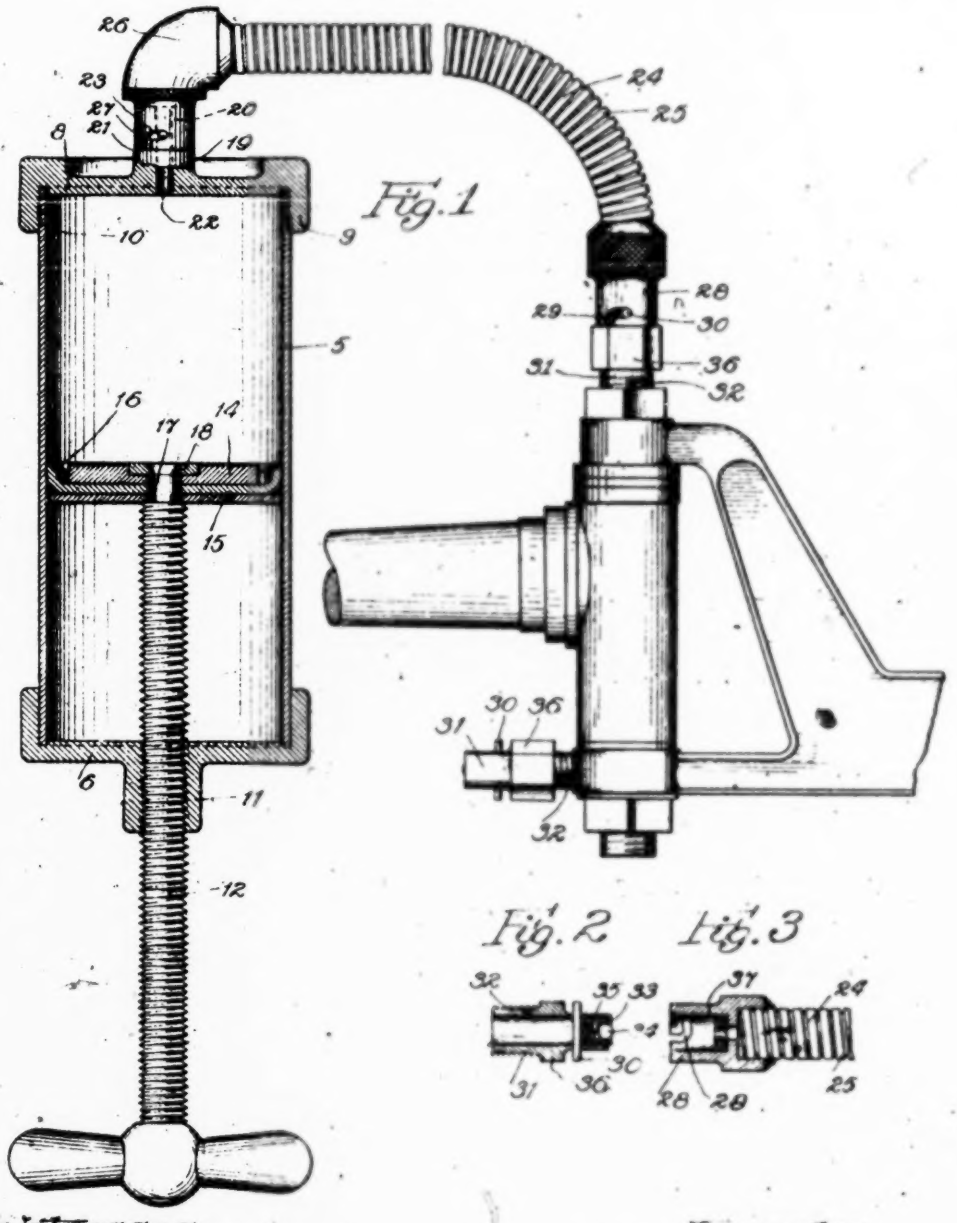

Fig. 1

Fig. 2

Fig. 3

Witnesses:
Andrew Wintercorn
Earl F. Pierce

Inventor
Arthur V. Gullborg
By Williams Bradbury & Le
Attys.

UNITED STATES PATENT OFFICE.

ARTHUR V. GULLBORG, OF CHICAGO, ILLINOIS.

LUBRICATING APPARATUS.

1,307,733. Specification of Letters Patent. Patented June 24, 1919.

Application filed February 11, 1918. Serial No. 216,586.

To all whom it may concern:

Be it known that I, ARTHUR V. GULLBORG, a citizen of the United States, residing at Chicago, in the county of Cook and State of Illinois, have invented a certain new and useful Improvement in Lubricating Apparatus, of which the following is a full, clear, concise, and exact description, reference being had to the accompanying drawings, forming a part of this specification.

This invention relates to lubricating apparatus and is particularly concerned with the provision of means for supplying lubricating grease to bearings which are more or less inaccessible. One object of my invention is to provide means of the character described comprising a novel grease pump which coöperates with a grease cup of novel construction to entirely fill the grease cup without wasting any of the lubricating grease. Another object of my invention is to provide a grease pump having a flexible discharge conduit. A still further object of my invention is to provide a grease pump having a flexible discharge conduit provided with means for interchangeably locking either end thereof to said grease pump or to the grease cups which are being filled by the grease pump, and a still further object is to provide a flexible discharge conduit for my improved grease pump one end of said conduit being provided with a straight coupling and the other end thereof being provided with an L-shaped coupling, whereby, by the use of either one or the other of these couplings it is possible to obtain access to grease cups in comparatively inaccessible places. Other objects, adaptabilities, and capabilities will appear as the description progresses, reference being had to the accompanying drawings, in which—

Figure 1 illustrates my improved grease pump supplying grease to one of my novel grease cups, the grease pump being shown partially in longitudinal section. In this view my improved grease cups are shown applied to a steering knuckle of an automobile, the latter being shown in fragmentary section; Fig. 2 is a detail view of the flexible discharge conduit of my improved grease pump; Fig. 3 is a detail view of the L-shaped coupling member; Fig. 4 is a detail view of the straight coupling member; Fig. 5 is a detail view of the grease cup; Fig. 6 is a detail view of the grease cup cover; Fig. 7 is a detail view of the grease cup plunger; Fig. 8 is a detail view of the grease cup plunger spring; Fig. 9 is a detail view of the grease cup plunger spring retaining washer; Fig. 10 is a detail view of the grease cup plunger spring retaining pin; Fig. 11 is a detail view of the grease cup plunger spring retaining pin washer; Fig. 12 is a detail view of the grease cup plunger spring retaining pin washer retaining cotter pin; Fig. 13 is a detail view of the grease cup plunger spring retaining pin washer retaining cotter pin; Fig. 14 is a detail view of the grease cup plunger spring retaining pin washer retaining cotter pin; Fig.

Application filed February 11, 1918. Serial No. 216,586.

To all whom it may concern:

Be it known that I, ARTHUR V. GULLBORG, a citizen of the United States, residing at Chicago, in the county of Cook and State of Illinois, have invented a certain new and useful Improvement in Lubricating Apparatus, of which the following is a full, clear, concise, and exact description, reference being had to the accompanying drawings, forming a part of this specification.

This invention relates to lubricating apparatus and is particularly concerned with the provision of means for supplying lubricating grease to bearings which are more or less inaccessible. One object of my invention is to provide means of the character described comprising a novel grease pump which coöperates with a grease cup of novel construction to entirely fill the grease cup without wasting any of the lubricating grease. Another object of my invention is to provide a grease pump having a flexible discharge conduit. A still further object of my invention is to provide a grease pump having a flexible discharge conduit provided with means for interchangeably locking either end thereof to said grease pump or to the grease cups which are being filled by the grease pump, and a still further object is to provide a flexible discharge conduit for my improved grease pump one end of said conduit being provided with a straight coupling and the other end thereof being provided with an L-shaped coupling, whereby, by the use of either one or the other of these couplings it is possible to obtain access to grease cups in comparatively inaccessible places. Other objects, adaptabilities, and capabilities will appear as the description progresses, reference being had to the accompanying drawings, in which—

Figure 1 illustrates my improved grease pump supplying grease to one of my novel grease cups, the grease pump being shown partially in longitudinal section. In this view my improved grease cups are shown applied to a steering knuckle of an automobile;

Fig. 2 is a longitudinal section through my improved grease cup: and

Fig. 3 is a longitudinal section through one of the coupling members.

Referring to the drawings, the reference character 5 indicates the barrel of my improved grease pump, one end of which is closed by a head 6, which may be soldered or otherwise secured to the end of the barrel. The opposite end of the barrel is closed by the head 8, which has an internally threaded flange 9 for receiving the external threads 10 on the end of the barrel. The head 6 is provided with a central boss 11, which is provided with a screwthreaded bore for receiving the screwthreaded piston rod 12. The rod 12 is provided with a handle 13 for rotating the same. The inner end of the rod 12 has a piston mounted thereon which comprises the spaced disks 14 and 15 between which is confined the cup leather 16, the two disks 14 and 15 and the cup leather being rotatably mounted upon the reduced end 17 of the piston rod and retained in place by means of a washer 18, through which the end of the piston rod extends and is riveted over to secure the washer thereto.

The head 8 is provided with a central boss 19 having a reduced portion 20, shown in dotted lines in Fig. 1, forming a shoulder 21 and a discharge opening 22 formed therethrough. A pin 23 extends through the reduced portion 20 and from both sides thereof. The discharge conduit 24 is formed from a piece of flexible duct, preferably comprising an outer spiral metallic rib 25. There are numerous flexible ducts in commercial use which may be employed for this part of my invention, and further description thereof appears to be unnecessary. At one end of the duct 24 I provide an L-shaped coupling 26 having bayonet slots 27, one of which is not shown, which co-act with the opposite ends of the pin 23 to secure the coupling to the pump. The opposite end of the conduit 24 is provided with a straight coupling 28 having bayonet slots 29, one of which is not shown, for co-acting with the opposite ends of the pin 30 of my novel grease cup.

From the above description it will be clear that either coupling member can be connected with either the pump or with the grease cup. By using the L-shaped coupling for connecting with the grease cup it is sometimes possible to gain access to a grease cup which would not otherwise be accessible.

My novel grease cup comprises a tubular member 31 having the screwthreads 32 at one end thereof for securing them to a bearing, and the other end thereof being flanged inwardly as shown at 33, for the purpose of

providing a seat for the ball closure 34. This closure is urged against its seat by means of a compression spring 35, which is confined between the pin 30 and the closure 34. The central portion of my grease cup is hexagonal in cross section, as indicated at 36, thereby providing means for receiving the jaws of a wrench to screw the cup into place.

In Fig. 3 the reference character 37 indicates a gasket made of felt or other suitable material for sealing the connection between the coupling and the grease cup. From this construction it will be seen that when the coupling member is secured to the grease cup by means of the bayonet connection, there will be no chance for the grease to escape between these two members when the piston rod 12 is rotated to force the piston inwardly, and thereby force the grease into the grease cup. This is an improved feature of my invention, for the reason that in prior grease pumps with which I am acquainted, no means has been provided for locking the discharge end of the nozzle to the grease cup, and consequently, if more grease than is necessary to fill the grease cup is forced through the nozzle, the excess quantity of grease merely overflows the edge of the grease cup and is wasted. With my improved construction there is no chance for grease being wasted in this manner. Furthermore, it is possible completely to fill the grease cup with grease, which is a result impossible of being obtained with the old type of grease pumps for the reason that by the use of these pumps more or less air always became entrapped in the grease.

Another advantage of my construction lies in the fact that after the coupling member of my grease pump has been connected with the grease cup, the pump can be operated without paying any attention to the location of the grease cup.

While I have disclosed the preferred embodiment of my invention, it is to be understood that it is not limited to the details of the structure described, but is capable of other adaptations and modifications within the scope of the appended claims, some of which are broad enough to include constructions in which the grease cups are entirely dispensed with and means are provided for detachably connecting the grease pump with

I claim as new and desire to secure by Letters Patent of the United States is:

1. The combination with a grease pump having a discharge opening and a flexible discharge conduit provided at one end with a straight coupling and at the other end with an L-shaped coupling, of a grease cup and means on said grease pump and grease cup for co-acting with said couplings to interchangeably connect either end of said conduit with said pump and cup respectively.

2. The combination with a grease pump having a discharge opening and a discharge conduit provided at one end with a straight coupling and at the other end with an L-shaped coupling, of a grease cup and means on said grease pump and grease cup for co-acting with said couplings to interchangeably connect either end of said conduit with said pump and cup respectively.

3. A grease cup comprising a tubular member having screwthreads at one end and having the other end flanged inwardly to provide a closure seat, a closure, a pin extending through said tubular member and on both sides thereof, and a spring confined between said pin and closure and tending to hold said closure on said seat.

4. A grease cup comprising a tubular member having one end flanged inwardly to provide a closure seat, a closure, a pin extending through said tubular member and on both sides thereof, and a spring confined between said pin and closure and tending to hold said closure on said seat.

5. A grease cup comprising a tubular member having one end flanged inwardly to provide a closure seat, a closure, a pin extending inwardly and outwardly from one wall of said tubular member, and a spring confined between the inner end of said pin and said closure to hold said closure on its seat.

6. A grease pump having a discharge opening in combination with a discharge conduit having a straight coupling member at one end and an L-shaped coupling member at the other end, said couplings and pump being provided with co-acting means for connecting either of said couplings with said pump.

In witness whereof, I hereunto subscribe my name this 1st day of February, 1918.

ARTHUR V. GULLBORG.

confined between the pin 33 and the closure 34. The central portion of my grease cup is hexagonal in cross section, as indicated at 36, thereby providing means for receiving the jaws of a wrench to screw the cup into place.

In Fig. 3 the reference character 37 indicates a gasket made of felt or other suitable material for sealing the connection between the coupling and the grease cup. From this construction it will be seen that when the coupling member is secured to the grease cup by means of the bayonet connection, there will be no chance for the grease to escape between these two members when the piston rod 12 is rotated to force the piston inwardly, and thereby force the grease into the grease cup. This is an improved feature of my invention, for the reason that in prior grease pumps with which I am acquainted, no means has been provided for locking the discharge end of the nozzle to the grease cup, and consequently, if more grease than is necessary to fill the grease cup is forced through the nozzle, the excess quantity of grease merely overflows the edge of the grease cup and is wasted. With my improved construction there is no chance for grease being wasted in this manner. Furthermore, it is possible completely to fill the grease cup with grease, which is a result impossible of being obtained with the old type of grease pumps for the reason that by the use of these pumps more or less air always became entrapped in the grease.

Another advantage of my construction lies in the fact that after the coupling member of my grease pump has been connected with the grease cup, the pump can be operated without paying any attention to the location of the grease cup.

While I have disclosed the preferred embodiment of my invention, it is to be understood that it is not limited to the details of the structure described, but is capable of other adaptations and modifications within the scope of the appended claims, some of which are broad enough to include constructions in which the grease cups are entirely dispensed with and means are provided for detachably connecting the grease pump with members having apertures formed therein for conveying grease to the parts to be lubricated.

Having thus described my invention, what

having a discharge opening and a flexible discharge conduit provided at one end with a straight coupling and at the other end with an L-shaped coupling, of a grease cup and means on said grease pump and grease cup for co-acting with said couplings to interchangeably connect either end of said conduit with said pump and cup respectively.

2. The combination with a grease pump having a discharge opening and a discharge conduit provided at one end with a straight coupling and at the other end with an L-shaped coupling, of a grease cup and means on said grease pump and grease cup for co-acting with said couplings to interchangeably connect either end of said conduit with said pump and cup respectively.

3. A grease cup comprising a tubular member having screwthreads at one end and having the other end flanged inwardly to provide a closure seat, a closure, a pin extending through said tubular member and on both sides thereof, and a spring confined between said pin and closure and tending to hold said closure on said seat.

4. A grease cup comprising a tubular member having one end flanged inwardly to provide a closure seat, a closure, a pin extending through said tubular member and on both sides thereof, and a spring confined between said pin and closure and tending to hold said closure on said seat.

5. A grease cup comprising a tubular member having one end flanged inwardly to provide a closure seat, a closure, a pin extending inwardly and outwardly from one wall of said tubular member, and a spring confined between the inner end of said pin and said closure to hold said closure on its seat.

6. A grease pump having a discharge opening in combination with a discharge conduit having a straight coupling member at one end and an L-shaped coupling member at the other end, said couplings and pump being provided with co-acting means for connecting either of said couplings with said pump.

In witness whereof, I hereunto subscribe my name this 1st day of February, 1918.

ARTHUR V. GULLBORG.

Witnesses:
H. M. CAULTIS,
OSCAR RAHM.

456

C. SENG.

PIPE COUPLING.

APPLICATION FILED DEC. 23, 1915.

1,322,357.

Patented Nov. 18, 1919.

Fig. 1.

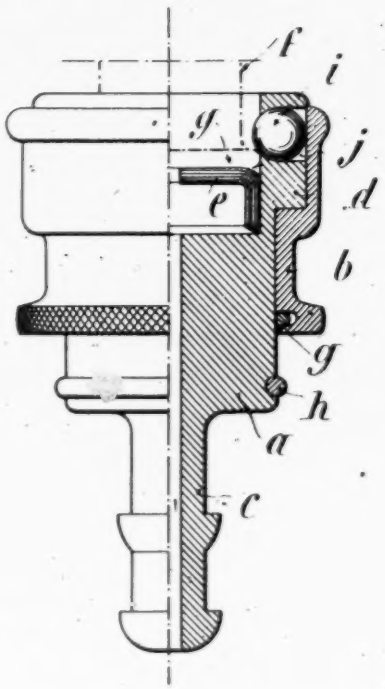

Fig. 4.

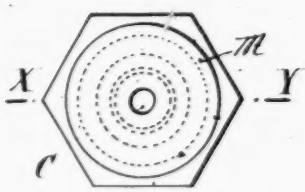

Fig. 3.

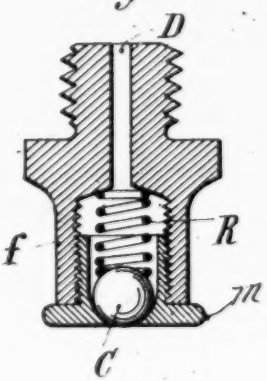

Fig. 2.

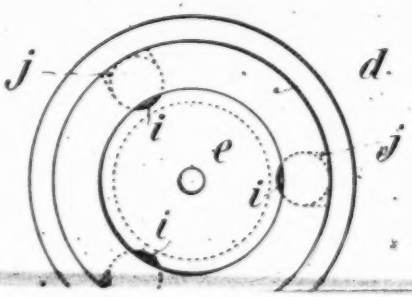

Fig. 1.

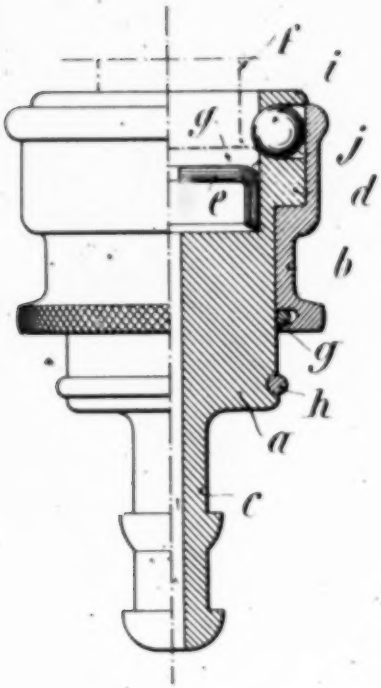

Fig. 4.

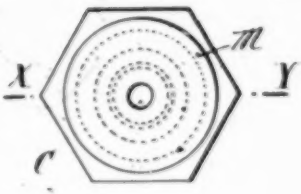

Fig. 3.

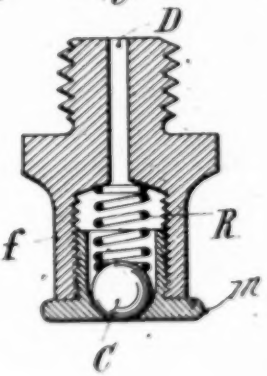

Fig. 2.

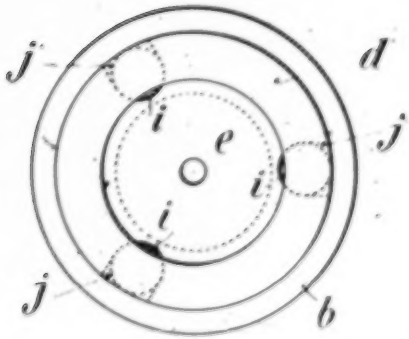

Inventor:
Camille Seng.
by Haselton, Lake & Co.
atty.

UNITED STATES PATENT OFFICE.

CAMILLE SENG, OF ROMILLY-SUR-SEINE, FRANCE.

PIPE-COUPLING.

REISSUED

1,322,357. Specification of Letters Patent. Patented Nov. 18, 1919.

Application filed December 23, 1915. Serial No. 68,431.

To all whom it may concern:

Be it known that I, CAMILLE SENG, a citizen of the French Republic, and a resident of Romilly-sur-Seine, Department of the Aube, in the Republic of France, have invented certain new and useful Improvements in Pipe-Couplings, of which the following is a specification, reference being had therein to the accompanying drawing.

The present invention relates to an instantaneous joint for fluids under pressure, characterized essentially by the fact that both parts of the joint are connected or separated from each other by the longitudinal displacement, upon one of the said parts, of a controlling sleeve intended to operate balls; these means being adapted to engage or not with the other part of the joint which, to this end, is provided with a connecting flange or the like means. The joint may, more particularly, be constituted by a body comprising a chamber within which the other part of the joint may be introduced, which rests or bears on a resilient packing insuring fluid-tightness of the joint. The connection is effected by means of balls which project into the said chamber and are located in recesses formed in the joint; the said balls actuated in opposition to their active connecting parts by means of the controlling sleeve without the assistance of intermediate members.

This instantaneous joint is more particularly applied in the case where it is desired to have forced lubrication with oil, grease and so on. In this case the joint which is connected to the piping of the delivery mechanism of a pump or the like, may be secured as desired by the operation of the sleeve actuating the balls upon the connecting flange with which the lubricator must be provided for that purpose. This flange may be formed upon the cap which closes the lubricator and which comprises an open-

a constructional form of ball lubricator which has been more particularly designed for use in conjunction with the instantaneous joint in the case of forced lubrication.

This new joint consists of a tubular body *a*, and an operating or controlling sleeve *b* adapted to slide on the said body *a*.

At one of its ends, the body *a* is constructed so as to form a pipe *c* intended to receive the pipe connecting the joint with the supply apparatus, such as lubricator, pump or other apparatus. At its opposite end, the body *a* forms a hollow head *d* having seated therein a fluid-tight washer *e* constituted by a piece of cupped leather, against which bears the end of the pipe *f* of the working apparatus to be connected. This pipe *f* comprises at its end a small flange *g* adapted to engage with a certain number of balls *i* (three in the illustrated example), arranged at equal distances from one another in radial recesses *j* formed in the head *d*.

The thickness of the annular portion of the head *d* and the diameter of the balls *i* are designed in such a manner that the said balls project into the interior of the recess formed in the head *d* when, the sleeve *b* being operated, these balls bear against the inner wall of the said sleeve.

A split ring *h* located in a groove formed in the body *a* projects around the latter in order to limit the travel of the sleeve *b*. This travel is designed in such a manner that when the sleeve *b* is drawn to the rear it permits of the disengagement of the balls *i* but sufficiently covers the recesses *j* to prevent the said balls from dropping out.

Under these conditions, in order to connect the tubular body *a* with the pipe *f* it is sufficient, after having previously displaced the sleeve *b* to the rear, to introduce the said pipe *f* into the head *d* so that the small flange *g* will bear against the washer *e*, be-

To all whom it may concern:

Be it known that I, CAMILLE SENG, a citizen of the French Republic, and a resident of Romilly-sur-Seine, Department of the Aube, in the Republic of France, have invented certain new and useful Improvements in Pipe-Couplings, of which the following is a specification, reference being had therein to the accompanying drawing.

The present invention relates to an instantaneous joint for fluids under pressure, characterized essentially by the fact that both parts of the joint are connected or separated from each other by the longitudinal displacement, upon one of the said parts, of a controlling sleeve intended to operate balls; these means being adapted to engage or not with the other part of the joint which, to this end, is provided with a connecting flange or the like means. The joint may, more particularly, be constituted by a body comprising a chamber within which the other part of the joint may be introduced, which rests or bears on a resilient packing insuring fluid-tightness of the joint. The connection is effected by means of balls which project into the said chamber and are located in recesses formed in the joint; the said balls actuated in opposition to their active connecting parts by means of the controlling sleeve without the assistance of intermediate members.

This instantaneous joint is more particularly applied in the case where it is desired to have forced lubrication with oil, grease and so on. In this case the joint which is connected to the piping of the delivery mechanism of a pump or the like, may be secured as desired by the operation of the sleeve actuating the balls upon the connecting flange with which the lubricator must be provided for that purpose. This flange may be formed upon the cap which closes the lubricator and which comprises an opening constituting a seat for the obturator subjected to the action of an internal spring.

The accompanying drawings illustrate, by way of example, a constructional form of the invention.

Figure 1 shows partly in elevation and partly in vertical section, a constructional form of the instantaneous joint forming the subject matter of the invention.

Fig. 2 is a corresponding sectional plan.

Figs. 3 and 4 show in vertical section taken on line X Y and in plan, respectively, a constructional form of ball fastener which has been more particularly designed for use in conjunction with the instantaneous joint in the case of forced lubrication.

This new joint consists of a tubular body *a*, and an operating or controlling sleeve *b* adapted to slide on the said body *a*.

At one of its ends, the body *a* is constructed so as to form a pipe *c* intended to receive the pipe connecting the joint with the supply apparatus, such as lubricator, pump or other apparatus. At its opposite end, the body *a* forms a hollow head *d* having seated therein a fluid-tight washer *e* constituted by a piece of cupped leather, against which bears the end of the pipe *f* of the working apparatus to be connected. This pipe *f* comprises at its end a small flange *g* adapted to engage with a certain number of balls *i* (three in the illustrated example), arranged at equal distances from one another in radial recesses *j* formed in the head *d*.

The thickness of the annular portion of the head *d* and the diameter of the balls *i* are designed in such a manner that the said balls project into the interior of the recess formed in the head *d* when, the sleeve *b* being operated, these balls bear against the inner wall of the said sleeve.

A split ring *h* located in a groove formed in the body *a* projects around the latter in order to limit the travel of the sleeve *b*. This travel is designed in such a manner that when the sleeve *b* is drawn to the rear it permits of the disengagement of the balls *i* but sufficiently covers the recesses *j* to prevent the said balls from dropping out.

Under these conditions, in order to connect the tubular body *a* with the pipe *f* it is sufficient, after having previously displaced the sleeve *b* to the rear, to introduce the said pipe *f* into the head *d* so that the small flange *g* will bear against the washer *e*, between the latter and the balls *i*. As soon as the parts are in such contact, the sleeve *b* is pushed. This movement has for its effect to cause the balls *i* to converge toward the axis of the joint so that they will slide against the rear portion of the flange and cause the same to bear with pressure against the fluid-tight washer *e*.

In order to disengage the joint it is sufficient to draw the sleeve *b* to the rear.

In this new joint, the engaging and disengaging operations may be performed very

easily by means of one hand only, the only movement to be effected consisting in sliding in a straight line the sleeves *b* on the body *a*, which movement takes place by itself under the effect of the introduction or withdrawal of the joint.

This instantaneous joint which may be used for insuring the junction of the two conduits wherein any fluid circulates and in particular, wherein any fluid under pressure circulates, may be used particularly in the case of forced lubrication with oil or grease. To this end recourse may be had to a ball lubricator forming an obturator and comprising an external flange for securing and fixing the joint.

Referring to Figs. 3 and 4, this lubricator is constituted by a hollow body *f* formed with a conduit D for the lubricant. A screw-threaded extension permits of placing the lubricator in place. In the chamber within the body *f* which is formed with a screw-thread, a plug *m* is screwed, provided with the flange against which the balls *i* are designed to engage, so as to effect a joint with the pump intended to deliver the lubricant. In the illustrated example, the plug *m*, is, moreover, hollowed out internally so as to receive a ball C constantly pushed against its seat by an inner spring R thus insuring closure of the lubricator.

It should be noted that the pressure of the fluid exerts itself within the chamber formed by the piece of cupped leather *e* in the direction of application of the same against the end of the pipe *f*.

What I claim and desire to secure by Letters Patent of the United States is:

A coupling comprising a tubular member provided at one end with an external annular shoulder, said shoulder having substantially radial seats therein which are open at their inner and outer ends and communicate with the interior of the coupling, a ball in each of the seats, the outer end of each socket being open for the introduction and removal of the ball and the inner end of the seats being restricted to permit of the ball extending a limited distance into the interior of the coupling, said coupling being provided with an internal shoulder inward of the seats, a slidable sleeve embracing the tubular member and normally closing the outer ends of the seats, said sleeve having an internal shoulder for engagement with the inner end of the annular shoulder on the coupling member to limit movement of the sleeve in one direction, and a ring sprung into an external groove on the coupling member in position to limit movement of the sleeve in the opposite direction.

In testimony whereof CAMILLE SENG has affixed his signature.

CAMILLE SENG.

459

July 26, 1927. 1,637,326

H. J. MURPHY

PRESSURE LUBRICATING SYSTEM AND APPARATUS

Filed Feb. 1, 1923 2 Sheets-Sheet 1

Fig. 1.

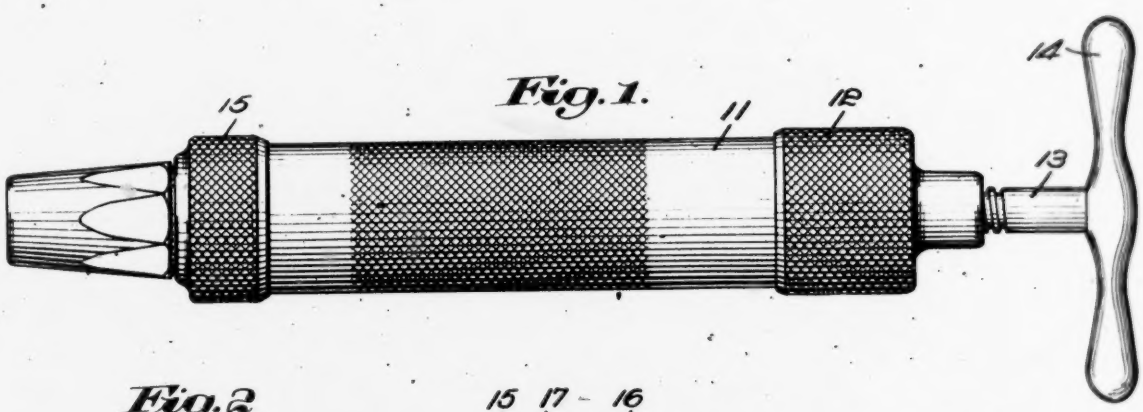

Fig. 2

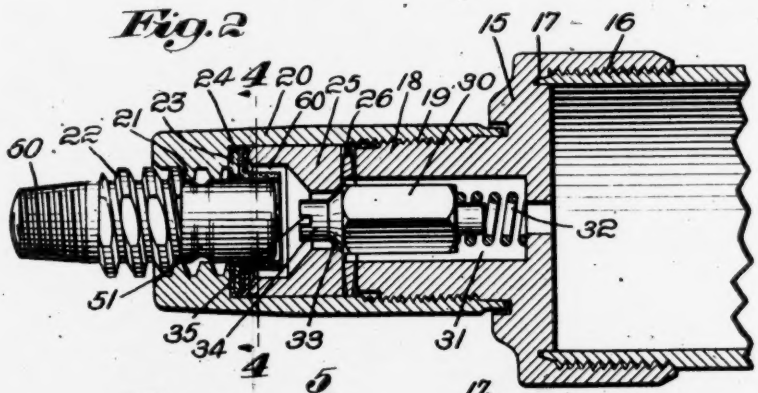

Fig. 4.

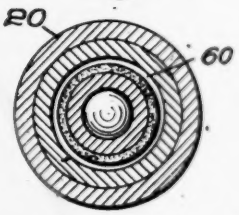

Fig. 3.

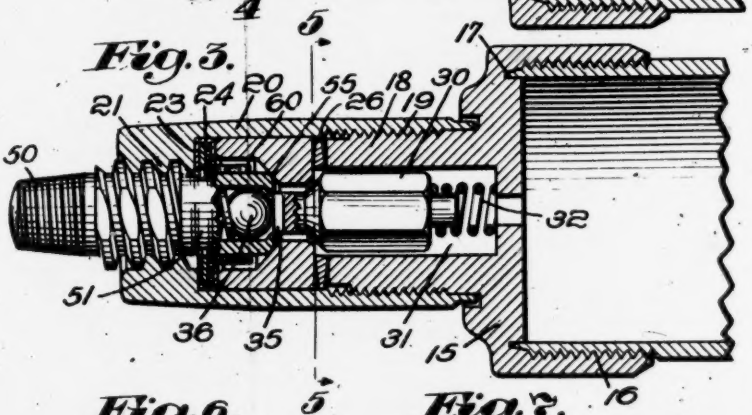

Fig. 5

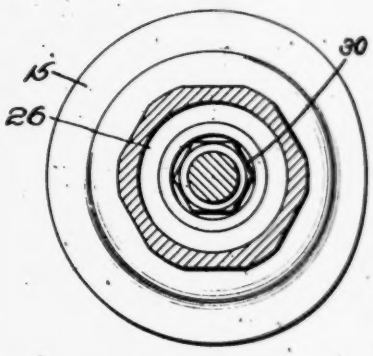

Fig. 6.

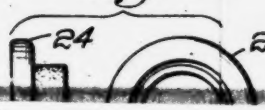

Fig. 7.

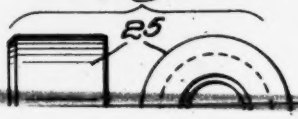

Fig. 8.

Fig. 1.

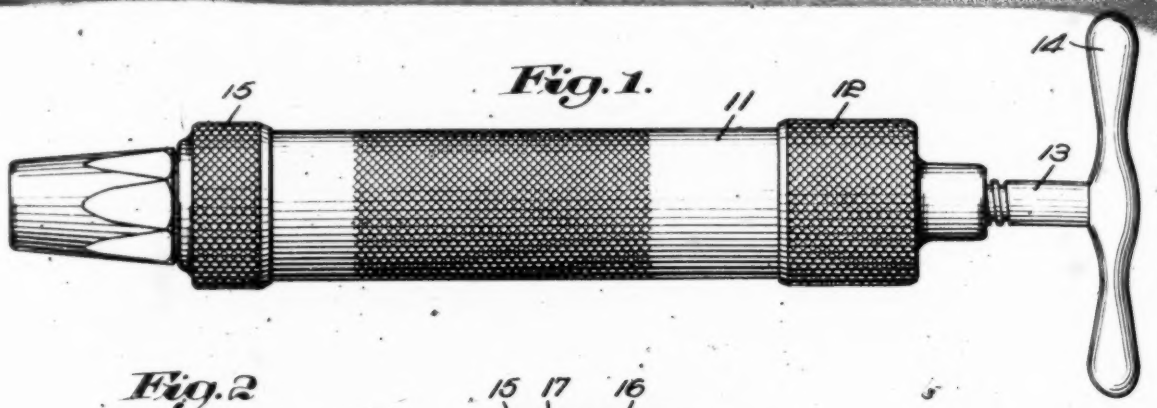

Fig. 2

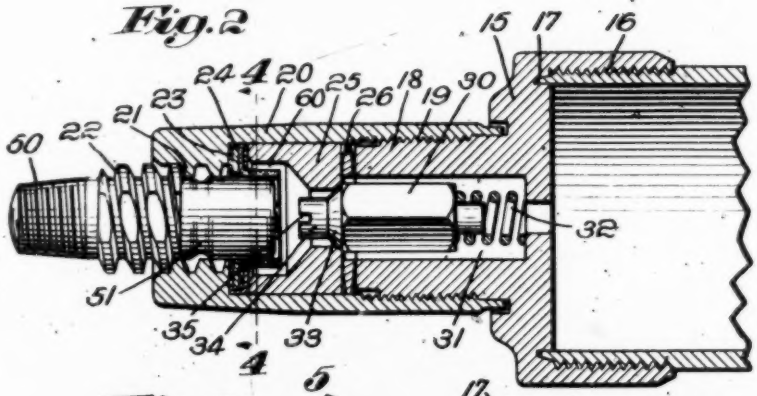

Fig. 4.

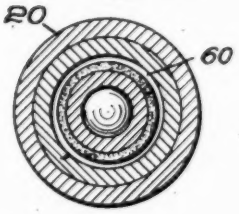

Fig. 5

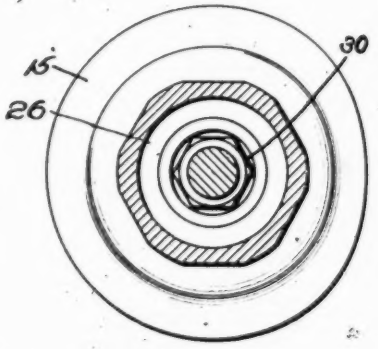

Fig. 3.

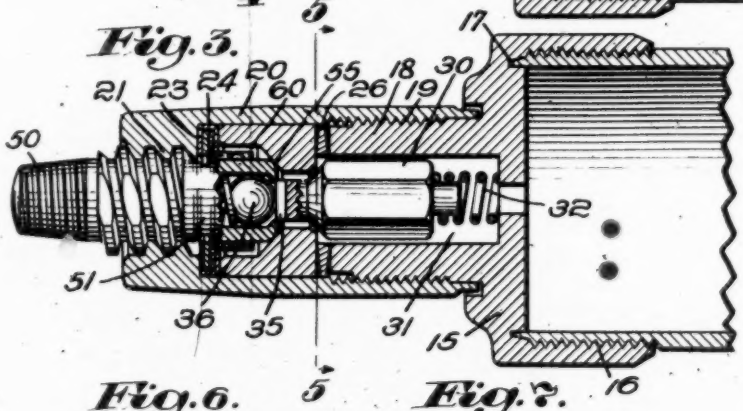

Fig. 6.

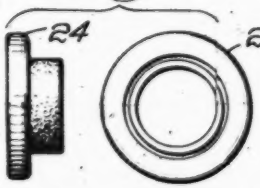

Fig. 7.

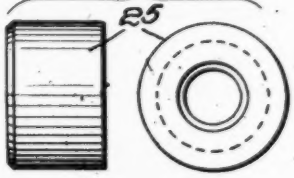

Fig. 8.

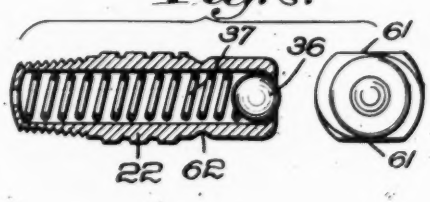

Fig. 9.

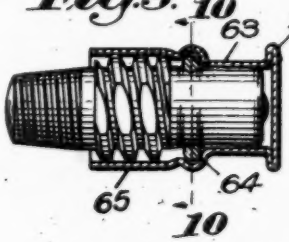

Fig. 10.

Inventor:
Howard J. Murphy.
by Emery, Booth, Jan[illegible] Varney.
Attys

460

July 26, 1927. 1,637,326

H. J. MURPHY

PRESSURE LUBRICATING SYSTEM AND APPARATUS

Filed Feb. 1, 1923 2 Sheets-Sheet 2

Fig. 11.

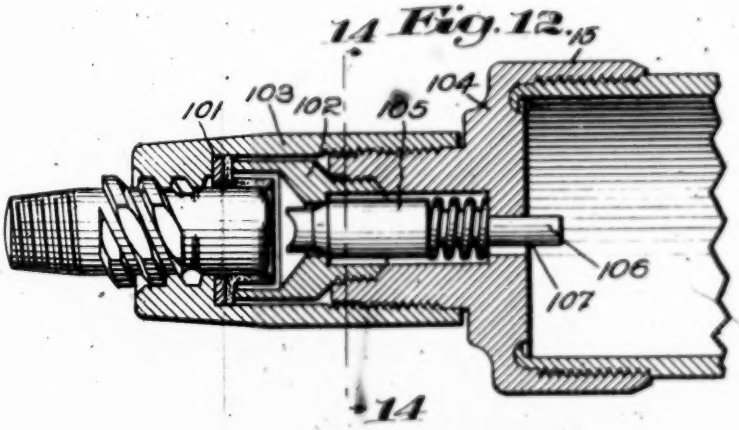

Fig. 12.

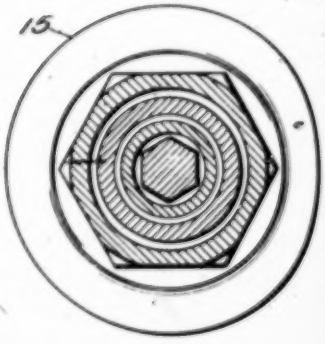

Fig. 14.

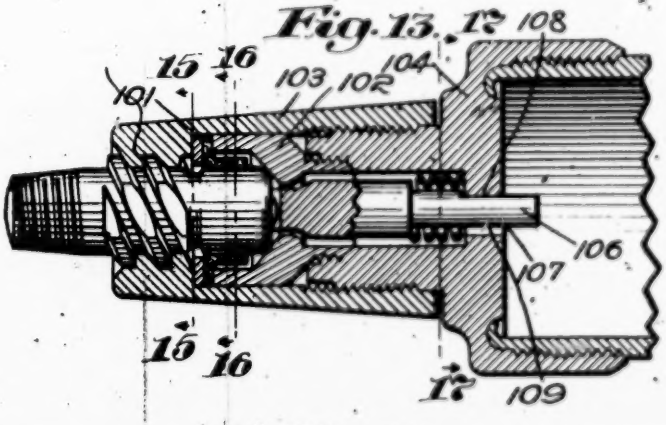

Fig. 13.

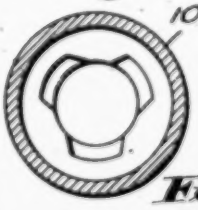

Fig. 15

Fig. 16.

Fig. 17.

Fig. 11.

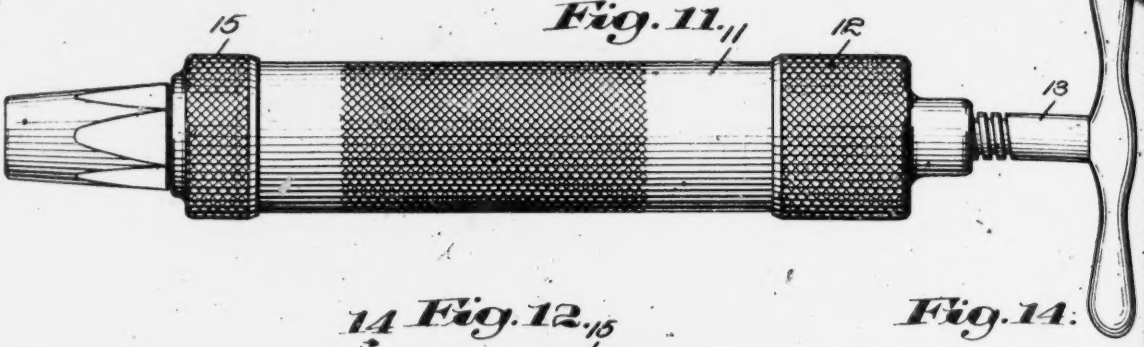

Fig. 12.

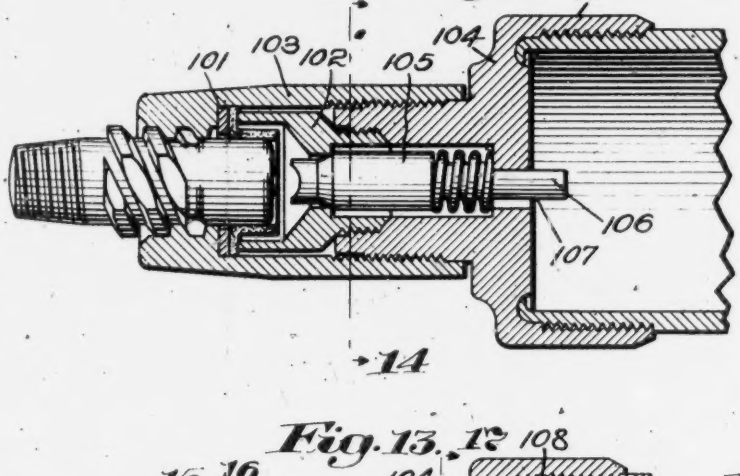

Fig. 14.

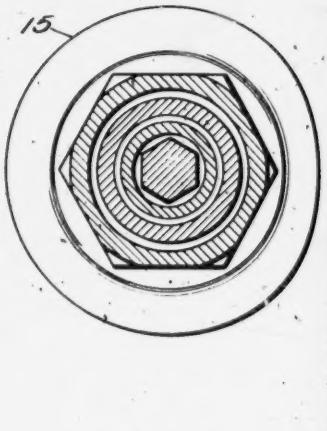

Fig. 13.

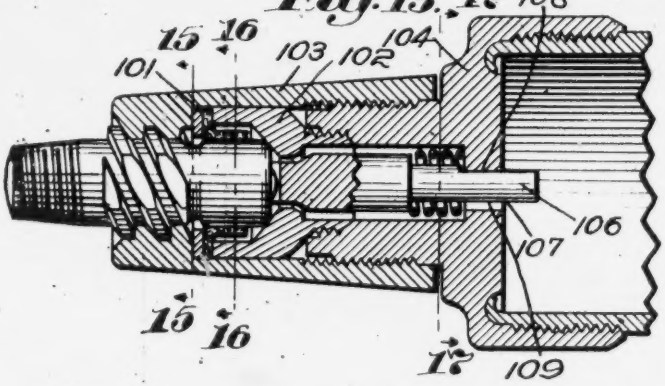

Fig. 15

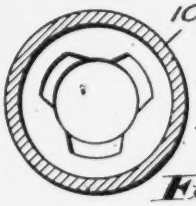

Fig. 16.

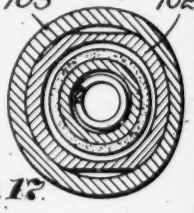

Fig. 17

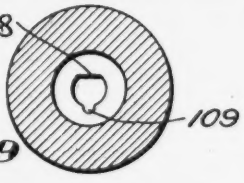

Fig. 18

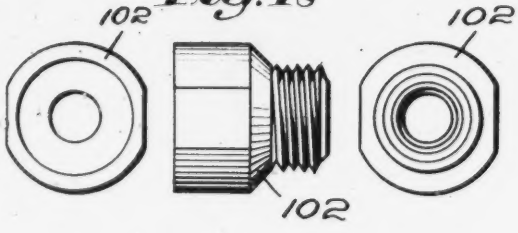

Fig. 19

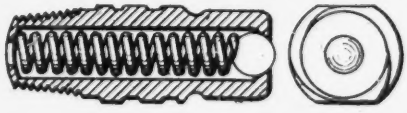

Inventor:
Howard J. Murphy
by Emery, Booth, Janney & Varney
Attys

Patented July 26, 1927. 1,637,326

UNITED STATES PATENT OFFICE.

HOWARD J. MURPHY, OF READING, MASSACHUSETTS, ASSIGNOR, BY MESNE ASSIGNMENTS, TO THE BASSICK MANUFACTURING COMPANY, OF CHICAGO, ILLINOIS, A CORPORATION OF DELAWARE.

PRESSURE LUBRICATING SYSTEM AND APPARATUS.

Application filed February 1, 1923. Serial No. 616,302.

This invention pertains to improvements in pressure lubricating systems and apparatus of the type wherein a single lubricant expelling element is adapted successively to engage a plurality of lubricant-receiving nipples. It is among the objects of the invention to provide a pressure lubricating system simple in construction and efficient in operation.

In the drawings, which show preferred forms of my invention:

Figure 1 is a side elevation of a lubricant-expelling gun;

Fig. 2 is a central, longitudinal section through the nozzle of the gun shown in Fig. 1, with the lubricant-receiving nipple partially engaged in said nozzle, being partly in elevation;

Fig. 3 is a view similar to Fig. 2, but showing the lubricant-receiving element fully entered in the nozzle and with the valve in the nozzle opened to permit discharge of lubricant;

Fig. 4 is a section on the line 4—4 of Fig. 2;

Fig. 5 is a section on the line 5—5 of Fig. 3;

Fig. 6 includes side and end elevations of the preferred form of sealing washer to prevent leakage of lubricant between the nozzle and nipple, while lubricant is supplied to the latter under pressure;

Fig. 7 includes a side and end elevation of a part of the nozzle, providing a valve seat, an abutment for engagement by the head of the nipple and a part for holding the sealing washer in position;

Fig. 8 includes a longitudinal section through a preferred form of nipple and an end elevation thereof;

Fig. 9 is a side elevation of the nipple showing a section of the

nipple, and a valve and valve seat held in assembled relation independently of the nozzle sleeve;

Fig. 13 is a view similar to Fig. 12, but showing the lubricant-receiving nipple fully entered in the nozzle and with the valve in the nozzle opened to permit discharge of lubricant;

Fig. 14 is a section on the line 14—14 of Fig. 12;

Fig. 15 is a section on the line 15—15 of Fig. 13;

Fig. 16 is a section on the line 16—16 of Fig. 13;

Fig. 17 is a section on the line 17—17 of Fig. 13, the valve and spring omitted;

Fig. 18 includes a side and two end elevations of a part of the nozzle, providing a valve seat, an abutment for engagement by the head of the nipple, a part for holding the sealing washer in position, and adapted to hold the valve in assembled relation independently of the nozzle sleeve; and

Fig. 19 includes a section and an end elevation of a triple thread nipple.

In both forms of my invention illustrated, I have shown lubricant-receiving nipples presenting plural threads for engagement with cooperating threads on the nozzle of a lubricant expelling gun, the thread shown in the first embodiment of my invention being double. In the later embodiment, such thread is triple, to provide for coupling with less turning of the gun, to provide easier initial engagement of the threads and to provide, under high pressure in the gun, for the initiation of uncoupling movement and closure of the valve, by pressure of the lubricant in the barrel when torque is not applied, and this quite independently of any manual turning of the gun in uncoupling direction.

PRESSURE LUBRICATING SYSTEM AND APPARATUS.

Application filed February 1, 1923. Serial No. 616,302.

This invention pertains to improvements in pressure lubricating systems and apparatus of the type wherein a single lubricant expelling element is adapted successively to engage a plurality of lubricant-receiving nipples. It is among the objects of the invention to provide a pressure lubricating system simple in construction and efficient in operation.

In the drawings, which show preferred forms of my invention:

Figure 1 is a side elevation of a lubricant-expelling gun;

Fig. 2 is a central, longitudinal section through the nozzle of the gun shown in Fig. 1, with the lubricant-receiving nipple partially engaged in said nozzle, being partly in elevation;

Fig. 3 is a view similar to Fig. 2, but showing the lubricant-receiving element fully entered in the nozzle and with the valve in the nozzle opened to permit discharge of lubricant;

Fig. 4 is a section on the line 4—4 of Fig. 2;

Fig. 5 is a section on the line 5—5 of Fig. 3;

Fig. 6 includes side and end elevations of the preferred form of sealing washer to prevent leakage of lubricant between the nozzle and nipple, while lubricant is supplied to the latter under pressure;

Fig. 7 includes a side and end elevation of a part of the nozzle, providing a valve seat, an abutment for engagement by the head of the nipple and a part for holding the sealing washer in position;

Fig. 8 includes a longitudinal section through a preferred form of nipple and an end elevation thereof;

Fig. 9 is a side elevation of the nipple showing a section of the preferred form of protecting cap therefor;

Fig. 10 is a section on the line 10—10 of Fig. 9, being partly in elevation;

Figs. 11 through 19 illustrate a later development of my invention wherein:

Fig. 11 is a side elevation of a lubricant-expelling gun;

Fig. 12 is a central, longitudinal section through the nozzle of the gun shown in Fig. 11, with the lubricant-receiving nipple partially engaged in said nozzle, being partly in elevation, showing a triple thread on the nipple, and a valve and valve seat held in assembled relation independently of the nozzle sleeve;

Fig. 13 is a view similar to Fig. 12, but showing the lubricant-receiving nipple fully entered in the nozzle and with the valve in the nozzle opened to permit discharge of lubricant;

Fig. 14 is a section on the line 14—14 of Fig. 12;

Fig. 15 is a section on the line 15—15 of Fig. 13;

Fig. 16 is a section on the line 16—16 of Fig. 13;

Fig. 17 is a section on the line 17—17 of Fig. 13, the valve and spring omitted;

Fig. 18 includes a side and two end elevations of a part of the nozzle, providing a valve seat, an abutment for engagement by the head of the nipple, a part for holding the sealing washer in position, and adapted to hold the valve in assembled relation independently of the nozzle sleeve; and

Fig. 19 includes a section and an end elevation of a triple thread nipple.

In both forms of my invention illustrated, I have shown lubricant-receiving nipples presenting plural threads for engagement with cooperating threads on the nozzle of a lubricant expelling gun, the thread shown in the first embodiment of my invention being double. In the later embodiment, such thread is triple, to provide for coupling with less turning of the gun, to provide easier initial engagement of the threads and to provide, under high pressure in the gun; for the initiation of uncoupling movement and closure of the valve, by pressure of the lubricant in the barrel when torque is not applied, and this quite independently of any manual turning of the gun in uncoupling direction.

In both embodiments of my invention, I have provided the nipple at the lubricant-securing end with a generally cylindrical projection sufficient to support the gun, when the threads of the nozzle are passed over the projection, and to prevent possible mutilation of the threads of either the nipple or nozzle. The nipple structure is not claimed herein but forms the subject matter of my divisional application Serial No. 8,586, filed February 11, 1925.

Cooperating with each embodiment of my invention, I have shown above the nipple-

engaging threads in the nozzle, an aligning portion for engagement with the end of the cylindrical portion on the nipple prior to engagement of the cooperating male and female threads, thereby to oppose cross-threading or other injurious engagement of such threads. I prefer, as shown, that this aligning portion be a washer immediately above the female threads in the end of the nozzle and immediately below a sealing part of the "hat washer" type, such sealing part adapted to surround the cylindrical portion of the cooperating nipple and to be pressed thereagainst by the pressure of the lubricant. In both embodiments of my invention illustrated, this "hat washer" is held in position by being pressed against an overlying annular end by pressure produced by screwing on the nozzle sleeve which carries or provides the female threaded portion of the coupling.

While for some purposes the valve need not be removable except from the interior of the head of the gun, I prefer that it be removable independently of the head of the gun and to this end I have shown in both embodiments of my invention illustrated a valve seat which holds the valve assembled and which is removable from the front of the head of the gun. This valve seat may provide the annular end holding the "hat washer" in position, and also may conveniently provide an abutment to limit the entrance of the nipple within the nozzle, which may in some degree act as a seal against the end of the nipple, though I prefer to avoid the use of any yielding gasket at this point and rely primarily on the "hat washer" to prevent leakage.

I will now describe in detail the form of my invention shown in Figures 1 through 10 of the drawings.

Referring to Fig. 1 through 10 of the drawings, and to the first form of my invention selected for illustrative purposes, I have shown a lubricant expelling gun including a barrel 11, rear head 12, into which is threaded a plunger stem 13 carrying the usual plunger interiorly of the barrel 11, and a handle 14. At the discharge end of the gun, I have shown a front head 15 secured to threads 16 to the exterior of the Between the projection 18 of the front head 15 and the threaded portion of nozzle sleeve 20, I have shown a shoulder 23 on the nozzle sleeve which engages and holds in position an aligning part, hereinafter more fully described, a sealing washer 24, a valve seat portion 25 and a sealing disc 26. The front head 15 is cored to receive a valve 30 having a polygonal portion whose corners engage the rounded inner wall of the valve guide chamber 31, the valve being pressed forwardly toward its seat by a valve spring 32 bearing at one end against the front head and at the other against the valve. The seating portion 33 of the valve is shown in Fig. 2 as bearing against the valve seat on the part 25, while in Fig. 3 these parts are separated to permit passage of lubricant. The valve opening end 34 may be slotted at 35 to permit passage of the lubricant to the lubricant-receiving opening in the end of the lubricant-receiving nipple. Such lubricant-receiving opening is preferably ordinarily closed by a ball check 36, which may be opened by the pressure of the lubricant, being normally pressed toward its seat by a nipple spring 37.

Assuming the parts carried by the front head 15 to be disassembled, the method of assembling the first embodiment of my invention illustrated is as follows. The valve part 30 with the valve spring 32 assembled therewith is dropped into the valve guide chamber 31. The aligning part, the sealing washer 24, the valve seat part 25 and sealing disc 26 may then be dropped in the order named within the nozzle sleeve 20, and the nozzle sleeve 20 screwed onto the projecting end 18 of the front head. When the screwing together of these parts is completed, the assembling operation is completed. Assuming the barrel 11 to be filled with lubricant, and assuming the lubricant-receiving nipple to be secured to its carrying part on the apparatus to be lubricated as by screwing the threaded end 50 thereof into a correspondingly threaded aperture, the lubricant expelling gun may be grasped by the handle 14 and the nozzle thereof introduced over the smooth end 51 of the lubricant-receiving nipple, which, contacting with the inner surface of the female threads in the nozzle, will

aligning portion be a washer immediately above the female threads in the end of the nozzle and immediately below a sealing part of the "hat washer" type, such sealing part adapted to surround the cylindrical portion of the cooperating nipple and to be pressed thereagainst by the pressure of the lubricant. In both embodiments of my invention illustrated, this "hat washer" is held in position by being pressed against an overlying annular end by pressure produced by screwing on the nozzle sleeve which carries or provides the female threaded portion of the coupling.

While for some purposes the valve need not be removable except from the interior of the head of the gun, I prefer that it be removable independently of the head of the gun and to this end I have shown in both embodiments of my invention illustrated a valve seat which holds the valve assembled and which is removable from the front of the head of the gun. This valve seat may provide the annular end holding the "hat washer" in position, and also may conveniently provide an abutment to limit the entrance of the nipple within the nozzle, which may in some degree act as a seal against the end of the nipple, though I prefer to avoid the use of any yielding gasket at this point and rely primarily on the "hat washer" to prevent leakage.

I will now describe in detail the form of my invention shown in Figures 1 through 10 of the drawings.

Referring to Fig. 1 through 10 of the drawings, and to the first form of my invention selected for illustrative purposes, I have shown a lubricant expelling gun including a barrel 11, rear head 12, into which is threaded a plunger stem 13 carrying the usual plunger interiorly of the barrel 11, and a handle 14. At the discharge end of the gun, I have shown a front head 15 secured to threads 16 to the exterior of the barrel 11 and presenting a recess 17 into which is introduced a sharpened end edge of the barrel 11 to provide a tight seal between the head 15 and the barrel 11. The preferred form of front head herein illustrated includes a forwardly projecting portion 18 exteriorly threaded at 19 to engage with internal threads on a nozzle sleeve 20. The nozzle sleeve 20 carries, preferably integral therewith, female threads 21, preferably of steep pitch and herein shown as double, to engage corresponding male threads 22 on the lubricant-receiving nipple.

having a polygonal portion whose corners engage the rounded inner wall of the valve guide chamber 31, the valve being pressed forwardly toward its seat by a valve spring 32 bearing at one end against the front head and at the other against the valve. The seating portion 33 of the valve is shown in Fig. 2 as bearing against the valve seat on the part 25, while in Fig. 3 these parts are separated to permit passage of lubricant. The valve opening end 34 may be slotted at 35 to permit passage of the lubricant to the lubricant-receiving opening in the end of the lubricant-receiving nipple. Such lubricant-receiving opening is preferably ordinarily closed by a ball check 36, which may be opened by the pressure of the lubricant, being normally pressed toward its seat by a nipple spring 37.

Assuming the parts carried by the front head 15 to be disassembled, the method of assembling the first embodiment of my invention illustrated is as follows. The valve part 30 with the valve spring 32 assembled therewith is dropped into the valve guide chamber 31. The aligning part, the sealing washer 24, the valve seat part 25 and sealing disc 26 may then be dropped in the order named within the nozzle sleeve 20, and the nozzle sleeve 20 screwed onto the projecting end 18 of the front head. When the screwing together of these parts is completed, the assembling operation is completed. Assuming the barrel 11 to be filled with lubricant, and assuming the lubricant-receiving nipple to be secured to its carrying part on the apparatus to be lubricated as by screwing the threaded end 50 thereof into a correspondingly threaded aperture, the lubricant expelling gun may be grasped by the handle 14 and the nozzle thereof introduced over the smooth end 51 of the lubricant-receiving nipple, which, contacting with the inner surface of the female threads in the nozzle, will guide the nozzle until the end of the nipple enters the aligning part, herein shown as a washer. This aligning part has an aperture fitting the exterior of the smooth end of the nipple sufficiently closely normally to preclude cross-threading of the male threads on the nipple with the female threads on the nozzle. The relatively steep pitch threads, double in the first embodiment of my invention, are very strong and render engagement easy and rapid, though the triple threads shown in the second embodiment of my invention are superior not only in these

respects but in other respects hereinafter referred to. Where the barrel of the gun rigidly carries the nozzle, the end 51 of the nipple and the threads of the nozzle are sufficient to carry the weight of the gun, though full of lubricant, and where sufficient entrance of the nipple is effected to provide entrance of the head thereof within the aligning part, sufficient bearing is provided not only to hold this weight but to provide substantial alignment even though the tendency to bind is increased by transverse pressure of the operator's hand on the end of the barrel or handle, in a position providing of course a leverage very unfavorable to alignment of the parts.

If now, the handle 14 be turned in clockwise direction, the whole lubricant expelling gun will be turned in clockwise direction so that the female threads 21 on the nozzle will engage the male threads 22 on the nipple and draw the nozzle over the nipple, forcing the smooth portion 51 of the nipple through the flexible sealing washer 24, the latter being of the type generally known as a "hat washer". When this screwing together operation has been carried to a sufficient point, the projection 34 on the valve in the nozzle will abut against the lubricant-receiving end of the nipple and the valve will be opened, as shown in Fig. 3, until the end of the nipple abuts against the stop shoulder 55. The valve now being opened, further clockwise movement of the handle of the gun will force lubricant past the valve, thereby opening the ball check 36 and permitting passage of lubricant to the part to be lubricated.

The lubricant expelled may, if desired, be under great pressure, but no substantial leakage between the nipple 51 and the nozzle is possible because pressure on the exterior of the hat washer holds the latter in such close contact to the smooth cylindrical portion of the nipple as to preclude leakage. No leakage past the threads 19 takes place because the sealing washer 26, which is preferably of relatively soft metal such as brass, precludes such leakage. In the first embodiment of my invention, all parts of the nozzle except the sealing washer 26 are preferably of steel and the nozzle sleeve 20 and valve seat part 25 are preferably case hardened.

not only to admit pressure behind the leather to insure a tight seal, but also, where a relatively light lubricant such as oil is used as distinguished from grease, to catch surplus oil passing through the valve during the instant when valve-closing operation is taking place.

That portion of the nipple presenting the steep pitch threads 22 is preferably provided with flattened portions 61, 61 to admit of the application of a suitable wrench to screw the nipple into its carrying part. The nipple is also preferably provided with a neck 62 for engagement by suitable means associated with a dust-excluding cap 63, which may be formed of a single sheet of metal, as shown in Fig. 9, enclosing a resilient ring-like spring 64 for engagement in said neck 62 when the cap is fully applied to the nipple. The skirt portion 65 protects the threads of the nipple from dust and mud, while an enlarged head 66 provides a finger hold permitting easy removal.

In the later embodiment of my invention shown in Figs. 11 through 19, the operation of the parts is generally the same as in the first embodiment thereof. There are, however, substantial advantages. The triple thread provides easier engagement than the double thread, and the steeper pitch reduces the turning necessary to effect coupling and opening of the valve, while also providing (at higher pressures) automatic initiation of uncoupling movement (when torque is removed) to the point where the valve has closed, this arising from the pressure of the lubricant on the valve pressing the nozzle away from the nipple with sufficient force to overcome the friction on the threads between the nozzle and nipple. The aligning or centering portion 101 is the same as in the earlier figures, and provides a seat for a similar "hat washer". The valve seat 102 and parts associated therewith are held in position independently of the nozzle sleeve 103, being screwed to the front head 104, which it is obvious may if desired be integral with the barrel of the gun. Thus the hat leather may, if desired, be replaced without disturbing the valve parts. The valve 105 differs from the one earlier described in that means are provided to preclude turning thereof

of the head thereof within the aligning part, sufficient bearing is provided not only to hold this weight but to provide substantial alignment even though the tendency to bind is increased by transverse pressure of the operator's hand on the end of the barrel or handle, in a position providing of course a leverage very unfavorable to alignment of the parts.

If now, the handle 14 be turned in clockwise direction, the whole lubricant expelling gun will be turned in clockwise direction so that the female threads 21 on the nozzle will engage the male threads 22 on the nipple and draw the nozzle over the nipple, forcing the smooth portion 51 of the nipple through the flexible sealing washer 24, the latter being of the type generally known as a "hat washer". When this screwing together operation has been carried to a sufficient point, the projection 34 on the valve in the nozzle will abut against the lubricant-receiving end of the nipple and the valve will be opened, as shown in Fig. 3, until the end of the nipple abuts against the stop shoulder 55. The valve now being opened, further clockwise movement of the handle of the gun will force lubricant past the valve, thereby opening the ball check 36 and permitting passage of lubricant to the part to be lubricated.

The lubricant expelled may, if desired, be under great pressure, but no substantial leakage between the nipple 51 and the nozzle is possible because pressure on the exterior of the hat washer holds the latter in such close contact to the smooth cylindrical portion of the nipple as to preclude leakage. No leakage past the threads 19 takes place because the sealing washer 26, which is preferably of relatively soft metal such as brass, precludes such leakage. In the first embodiment of my invention, all parts of the nozzle except the sealing washer 26 are preferably of steel and the nozzle sleeve 20 and valve seat part 25 are preferably case hardened.

When the lubricant expelling gun is to be removed from the nipple, turning of the handle 14 in counterclockwise direction will withdraw the nozzle from over the nipple, gradually permitting closure of the valve. The valve reaches its seat before the hat washer 24 is clear of the cylindrical portion 51 of the nipple and all pressure on the nipple is relieved by enlargement of the chamber between the head of the nipple and valve before there is any opportunity afforded for leakage. I preferably provide a relatively large aperture 60 behind the hat leather 24,

That portion of the nipple presenting the steep pitch threads 22 is preferably provided with flattened portions 61, 61 to admit of the application of a suitable wrench to screw the nipple into its carrying part. The nipple is also preferably provided with a neck 62 for engagement by suitable means associated with a dust-excluding cap 63, which may be formed of a single sheet of metal, as shown in Fig. 9, enclosing a resilient ring-like spring 64 for engagement in said neck 62 when the cap is fully applied to the nipple. The skirt portion 65 protects the threads of the nipple from dust and mud, while an enlarged head 66 provides a finger hold permitting easy removal.

In the later embodiment of my invention shown in Figs. 11 through 19, the operation of the parts is generally the same as in the first embodiment thereof. There are, however, substantial advantages. The triple thread provides easier engagement than the double thread, and the steeper pitch reduces the turning necessary to effect coupling and opening of the valve, while also providing (at higher pressures) automatic initiation of uncoupling movement (when torque is removed) to the point where the valve has closed, this arising from the pressure of the lubricant on the valve pressing the nozzle away from the nipple with sufficient force to overcome the friction on the threads between the nozzle and nipple. The aligning or centering portion 101 is the same as in the earlier figures, and provides a seat for a similar "hat washer". The valve seat 102 and parts associated therewith are held in position independently of the nozzle sleeve 103, being screwed to the front head 104, which it is obvious may if desired be integral with the barrel of the gun. Thus the hat leather may, if desired, be replaced without disturbing the valve parts. The valve 105 differs from the one earlier described in that means are provided to preclude turning thereof on its seat, such means preferably including a rearwardly extending non-circular portion 106, herein shown as flattened on one side 107 to engage a flattened side 108 (Fig. 17) of a guiding hole in the head 104, while the grease may pass to the valve proper through suitable aperture typified by the lateral groove 109. With this construction, the valve and valve seat may be assembled with the front head and a very superior fit provided merely by pounding lightly on the rear end of the stem 106. This seat, once provided, will be tight so long as the valve

seat 102 is not subsequently turned, and there is normally no occasion for subsequently turning this.

While I have shown and described specific embodiments of my invention, it will be understood that considerable changes may be made without departing from the scope thereof, which is best defined in the following claims.

I claim:

1. In lubricating apparatus of the class described, a lubricant-expelling device for cooperation with a lubricant-receiving nipple, said device including a barrel having a front head and a coupling nozzle rigidly connected to said head, said nozzle comprising a female threaded portion for quick detachable connection with said nipple, sealing means for effecting a lubricant-tight connection with said nipple, a valve, and a seat for said valve all located forwardly of and detachably secured to said front head independently of said female threaded portion.

2. A lubricant-expelling device for cooperation with a lubricant-receiving nipple, said device including a barrel, a nozzle nonrotatably secured thereto, said nozzle presenting a nozzle sleeve interiorly threaded at one end for engagement with the nipple, and containing a hat washer, a fixed stop element to limit entrance of the nipple in the nozzle, said stop element having one end thereof seated against the base of said hat washer to hold it in place and presenting at the other end a valve seat.

3. A lubricating device presenting a nozzle having a sleeve and female threads integral with said sleeve for engagement with male threads on a lubricant-receiving part, a removable centering part beyond said female threads for guiding said nozzle relative to the nipple and a removable valve seat part seated against said centering part and presenting an angled shoulder for engagement with the end of the nipple.

4. A lubricating device presenting a nozzle having a sleeve, female threads adjacent the end of said sleeve and a shoulder above said female threads, said shoulder supporting a removable centering part.

5. A lubricating device presenting a nozzle having a sleeve, female threads adja-

part, and a sealing washer held in position by said valve seat presenting part.

7. Lubricating apparatus including a nozzle sleeve, a nozzle sleeve carrying part, a valve seat presenting part between said sleeve and sleeve carrying part and a removable centering part held in position in said sleeve by said valve seat-presenting part.

8. Lubricating apparatus including a nozzle sleeve, a nozzle sleeve carrying part, a valve seat presenting part between said sleeve and sleeve carrying part, a removable centering part and a hat washer both held in position by said sleeve against said valve seat presenting part.

9. Lubricating apparatus including a barrel having a closure at its discharge end, a nozzle secured to said closure and presenting threads interiorly of its end for engagement with an exteriorly threaded lubricant-receiving element, a chamber in said nozzle above said threads and a centering washer secured in said chamber adjacent the inner ends of said threads to engage an extension on the nipple and preclude excessive angularity between the nipple and nozzle during initial coming together of the cooperating threads.

10. A lubricating device presenting a threaded coupling for engagement with a threaded lubricant-receiving nipple, said coupling presenting a nipple centering portion above the threads in the coupling, the threads being of steep pitch and plural for quick connection between the device and the nipple.

11. In apparatus of the class described, a lubricating device presenting a coupling having a threaded part for engagement with a threaded lubricant-receiving nipple, said threads being rugged and of steep pitch for quick connection between the device and the nipple, sealing means adjacent the threaded part for effecting a lubricant-tight connection with said nipple, and means between said sealing means and said threaded part for centering a nipple relatively to said threaded coupling and for preventing said sealing means from projecting into the threaded part of the coupling.

12. Lubricating apparatus presenting a sleeve having integral means for making a quick detachable connection with a lubricant-

1. In lubricating apparatus of the class described, a lubricant-expelling device for cooperation with a lubricant-receiving nipple, said device including a barrel having a front head and a coupling nozzle rigidly connected to said head, said nozzle comprising a female threaded portion for quick detachable connection with said nipple, sealing means for effecting a lubricant-tight connection with said nipple, a valve, and a seat for said valve all located forwardly of and detachably secured to said front head independently of said female threaded portion.

2. A lubricant-expelling device for cooperation with a lubricant-receiving nipple, said device including a barrel, a nozzle nonrotatably secured thereto, said nozzle presenting a nozzle sleeve interiorly threaded at one end for engagement with the nipple, and containing a hat washer, a fixed stop element to limit entrance of the nipple in the nozzle, said stop element having one end thereof seated against the base of said hat washer to hold it in place and presenting at the other end a valve seat.

3. A lubricating device presenting a nozzle having a sleeve and female threads integral with said sleeve for engagement with male threads on a lubricant-receiving part, a removable centering part beyond said female threads for guiding said nozzle relative to the nipple and a removable valve seat part seated against said centering part and presenting an angled shoulder for engagement with the end of the nipple.

4. A lubricating device presenting a nozzle having a sleeve, female threads adjacent the end of said sleeve and a shoulder above said female threads, said shoulder supporting a removable centering part.

5. A lubricating device presenting a nozzle having a sleeve, female threads adjacent the ends of said sleeve and a shoulder above said female threads, said shoulder supporting a removable centering part and beyond said part a hat washer back-supported by said centering part to prevent lubricant from forcing said washer into said female threads.

6. Lubricating apparatus including a nozzle sleeve having interlocking means for making a quick detachable connection with a lubricant receiving fitting, a nozzle sleeve carrying part, and a valve seat presenting part between said sleeve and sleeve carrying part.

7. Lubricating apparatus including a nozzle sleeve, a nozzle sleeve carrying part, a valve seat presenting part between said sleeve and sleeve carrying part, a removable centering part and a hat washer both held in position by said sleeve against said valve seat presenting part.

9. Lubricating apparatus including a barrel having a closure at its discharge end, a nozzle secured to said closure and presenting threads interiorly of its end for engagement with an exteriorly threaded lubricant-receiving element, a chamber in said nozzle above said threads and a centering washer secured in said chamber adjacent the inner ends of said threads to engage an extension on the nipple and preclude excessive angularity between the nipple and nozzle during initial coming together of the cooperating threads.

10. A lubricating device presenting a threaded coupling for engagement with a threaded lubricant-receiving nipple, said coupling presenting a nipple centering portion above the threads in the coupling, the threads being of steep pitch and plural for quick connection between the device and the nipple.

11. In apparatus of the class described, a lubricating device presenting a coupling having a threaded part for engagement with a threaded lubricant-receiving nipple, said threads being rugged and of steep pitch for quick connection between the device and the nipple, sealing means adjacent the threaded part for effecting a lubricant-tight connection with said nipple, and means between said sealing means and said threaded part for centering a nipple relatively to said threaded coupling and for preventing said sealing means from projecting into the threaded part of the coupling.

12. Lubricating apparatus presenting a sleeve having integral means for making a quick detachable connection with a lubricant receiving fitting, a support therefor, a valve guided in said support, and a valve seat, said valve seat threadedly connected to the front of said support and holding said valve in assembled relation even after removal of said sleeve.

13. Lubricating apparatus including a threaded nipple and a cooperating coupling presenting a cooperating threaded part for engagement with the threads on said nipple, said nipple having at its lubricant-receiving end an extension of substantial length and

of a diameter substantially that of the bottom of its threads, and a centering part in said nozzle beyond said threads, said centering part supporting the base flange of a hat washer adapted to surround and closely bear against said extension.

14. Lubricating apparatus including a lubricant-expelling device comprising a barrel, a lubricant-expelling plunger in said barrel, a nozzle rigidly connected to said barrel, said nozzle presenting coupling means cooperating with coupling means presented by a lubricant-receiving nipple to secure the device to the nipple, a removable centering part and a hat washer beyond said coupling means in said nozzle for periphreal engagement with the end of the nipple, and a fixed abutment a substantial distance beyond said coupling means in said nozzle for engagement with the end of the nipple beyond said hat washer.

15. Lubricating apparatus including a nozzle having a sleeve presenting a plurality of female threads at one end thereof, a hat washer beyond said threads, and a valve within said sleeve beyond said hat washer, said valve including a valve seat part separate from said sleeve to permit removal of said washer from the back end of said sleeve.

16. Lubricating apparatus including a nozzle having a sleeve presenting a plurality of female threads at one end thereof, a hat washer beyond said threads, a valve within said sleeve beyond said hat washer, said valve including a valve seat part separate from said sleeve to permit removal of said washer from the back end of said sleeve, and a relatively thin metal washer between said threads and said hat washer to prevent lubricant from forcing the hat washer into said female threads.

17. A lubricant-expelling device including a supply barrel presenting a valve seat part secured thereto to hold a valve in assembled relation, a sleeve secured to said barrel and presenting a female thread adjacent the outer end thereof, a hat washer having its base held between a metal centering washer and the end of said valve seat part, and said centering washer back-supporting said hat washer adjacent the inner end of said female threads for engagement with corresponding male threads on a lubricant-receiving nipple, said sleeve presenting a chamber between said female threads and said head, and in said chamber a valve seat-providing part, and a hat washer having its base flange pressed toward said valve seat part by said sleeve and having its tubular portion extending within said valve seat part.

20. A lubricant-expelling device having a head at its discharge end, said head carrying a sleeve presenting at its outer end female threads for engagement with corresponding male threads on a lubricant-receiving nipple, said sleeve presenting a chamber between said female threads and said head, and in said chamber a shoulder behind said female threads, a hat washer, valve seat-providing means interiorly chambered to receive the tubular portion of said hat washer, and presenting a tubular shell projecting toward said shoulder to press the base of said hat washer toward said shoulder when said sleeve is assembled with said head.

21. A lubricant-expelling device having a head at its discharge end, said head carrying a sleeve presenting at its outer end female threads for engagement with corresponding male threads on a lubricant-receiving nipple, said sleeve presenting a chamber between said female threads and said head, and in said chamber a shoulder behind said female threads, an apertured disc supported by said shoulder, a hat washer having a base flange supported by said disc, and a tubular part adapted to press said base flange against said disc when said sleeve is assembled with said head, said hat washer having a tubular portion extending within said tubular part.

22. Lubricating apparatus presenting a nozzle including a sleeve having interlocking means for making a quick detachable connection with a lubricant receiving fitting removably secured to the front head of a lubricant expelling device, a valve guided within said head, a seat for said valve independent of said nozzle sleeve, said nozzle sleeve being removably secured to said front head and adapted to clamp said seat thereto, said valve and said seat being removable from the front of said head subsequent to the removal of said sleeve therefrom.

18. A lubricant-[illegible]

a lubricant-expelling plunger in said barrel, a nozzle rigidly connected to said barrel, said nozzle presenting coupling means cooperating with coupling means presented by a lubricant-receiving nipple to secure the device to the nipple, a removable centering part and a hat washer beyond said coupling means in said nozzle for periphreal engagement with the end of the nipple, and a fixed abutment a substantial distance beyond said coupling means in said nozzle for engagement with the end of the nipple beyond said hat washer.

15. Lubricating apparatus including a nozzle having a sleeve presenting a plurality of female threads at one end thereof, a hat washer beyond said threads, and a valve within said sleeve beyond said hat washer, said valve including a valve seat part separate from said sleeve to permit removal of said washer from the back end of said sleeve.

16. Lubricating apparatus including a nozzle having a sleeve presenting a plurality of female threads at one end thereof, a hat washer beyond said threads, a valve within said sleeve beyond said hat washer, said valve including a valve seat part separate from said sleeve to permit removal of said washer from the back end of said sleeve, and a relatively thin metal washer between said threads and said hat washer to prevent lubricant from forcing the hat washer into said female threads.

17. A lubricant-expelling device including a supply barrel presenting a valve seat part secured thereto to hold a valve in assembled relation, a sleeve secured to said barrel and presenting a female thread adjacent the outer end thereof, a hat washer having its base held between a metal centering washer and the end of said valve seat part, and said centering washer back-supporting said hat washer adjacent the inner end of said female thread.

18. A lubricant-expelling device having a head at its discharge end, said head carrying a sleeve presenting at its outer end female threads for engagement with corresponding male threads on a lubricant-receiving nipple, said sleeve presenting a chamber between said female threads and said head, and in said chamber a valve seat-providing part removable when said sleeve is disconnected from said head.

19. A lubricant-expelling device having a head at its discharge end, said head carrying a sleeve presenting at its outer end female ing within said valve seat part.

20. A lubricant-expelling device having a head at its discharge end, said head carrying a sleeve presenting at its outer end female threads for engagement with corresponding male threads on a lubricant-receiving nipple, said sleeve presenting a chamber between said female threads and said head, and in said chamber a shoulder behind said female threads, a hat washer, valve seat-providing means interiorly chambered to receive the tubular portion of said hat washer, and presenting a tubular shell projecting toward said shoulder to press the base of said hat washer toward said shoulder when said sleeve is assembled with said head.

21. A lubricant-expelling device having a head at its discharge end, said head carrying a sleeve presenting at its outer end female threads for engagement with corresponding male threads on a lubricant-receiving nipple, said sleeve presenting a chamber between said female threads and said head, and in said chamber a shoulder behind said female threads, an apertured disc supported by said shoulder, a hat washer having a base flange supported by said disc, and a tubular part adapted to press said base flange against said disc when said sleeve is assembled with said head, said hat washer having a tubular portion extending within said tubular part.

22. Lubricating apparatus presenting a nozzle including a sleeve having interlocking means for making a quick detachable connection with a lubricant receiving fitting removably secured to the front head of a lubricant expelling device, a valve guided within said head, a seat for said valve independent of said nozzle sleeve, said nozzle sleeve being removably secured to said front head and adapted to clamp said seat thereto, said valve and said seat being removable from the front of said head subsequent to the removal of said sleeve therefrom.

23. In a lubricating apparatus of the class described, the combination of a lubricant compressor, a nozzle connected thereto, said nozzle having a bore formed near its outer end with an annular inwardly facing shoulder and with quick detachable means for engaging a nipple, said bore having therein a sleeve provided with an annular forwardly facing shoulder, a sealing member for engagement with the side walls of said nipple and formed with a peripheral portion operatively held between said shoulders, said sleeve provided with a second forwardly

facing annular shoulder for limiting the inward extent of projection of said nipple into said bore.

24. In a lubricating apparatus of the class described, the combination of a lubricant compressor, a nozzle connected thereto, said nozzle provided with a lubricant conducting bore having near its extremity means for making a quick-detachable connection with a lubricant receiving nipple and formed at an intermediate portion thereof with an annular tapered shoulder forming a stop limiting the inward extent of projection of said nipple into said bore, and sealing means for engaging the side walls of said nipple situated between said quick-detachable means and said annular shoulder.

In testimony whereof, I have signed my name to this specification.

HOWARD J. MURPHY.

A.D. 1915. Feb. 24. No. 3028.
SENG'S COMPLETE SPECIFICATION. 1 SHEET

2nd Edition

[This Drawing is a reproduction of the Original on a reduced scale.]

Fig. 1

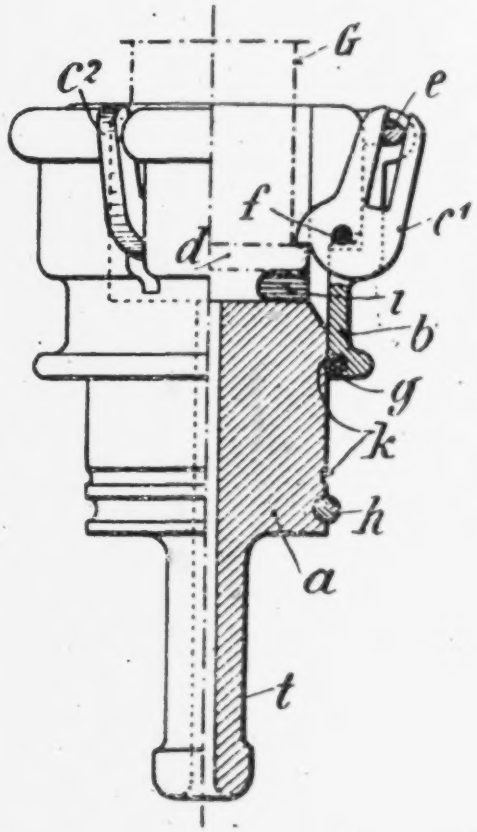

Fig. 2.

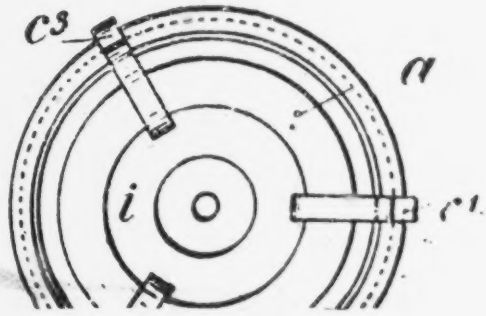

Fig. 3

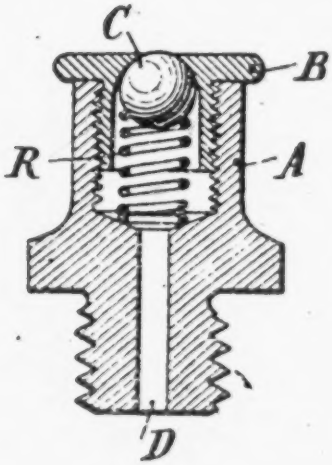

Fig. 4.

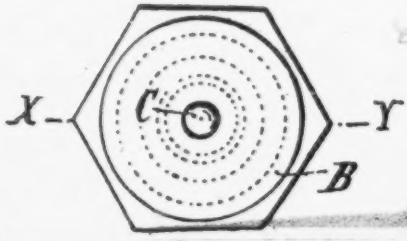

[This Drawing is a reproduction of the Original on a reduced scale]

Fig. 1

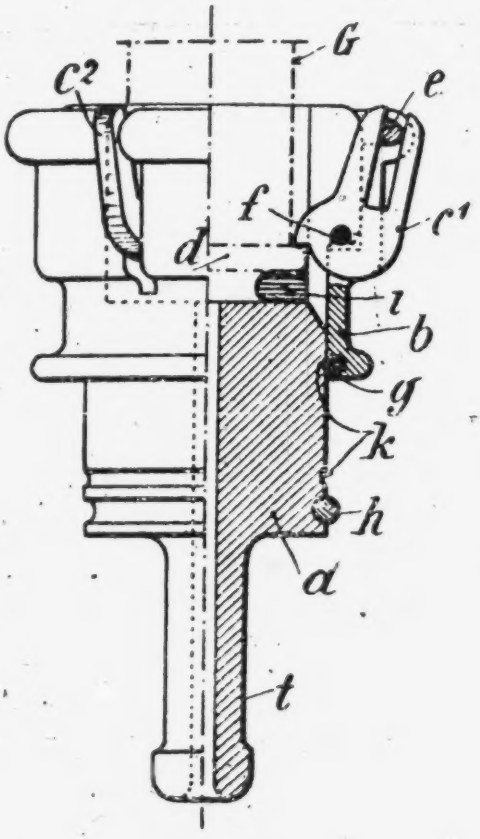

Fig. 3

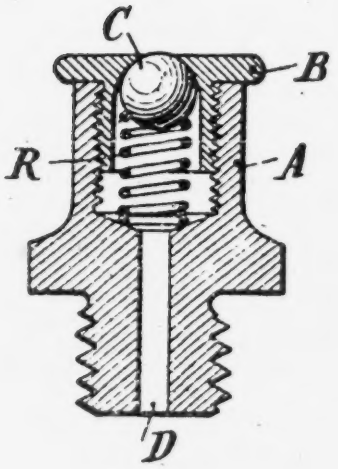

Fig. 2.

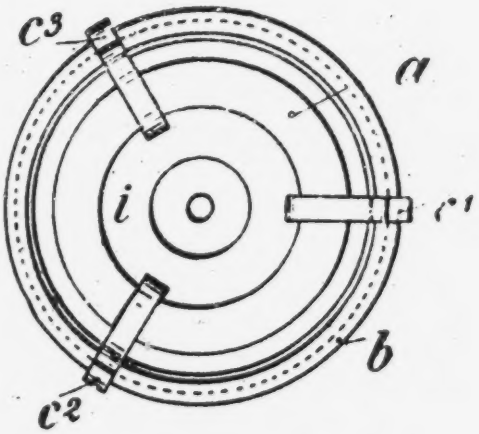

Fig. 4.

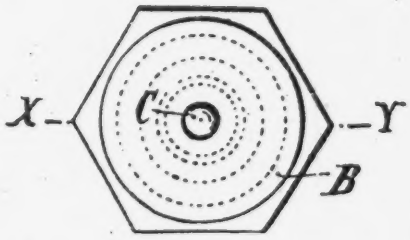

[Second Edition.]

N° 3028 A. D. 1915

(*Under International Convention.*)

Date claimed for Patent under Patents and Designs Act, 1907, being date of first Foreign Application (in France), } *24th Feb., 1914*

Date of Application (in the United Kingdom), 24th Feb., 1915

At the expiration of twelve months from the date of the first Foreign Application the provision of Section 91 (3) (a) of the Patents and Designs Act, 1907, as to inspection of Specification, became operative

Accepted, 1st June, 1916

COMPLETE SPECIFICATION.

Instantaneous Joint for Pipes Conveying Fluids under Pressure particularly applicable to Lubricators.

I, Camille Seng, of rue Carnot, Romilly-sur-Seine, in the Republic of France, Engineer, do hereby declare the nature of this invention and in what manner the same is to be performed, to be particularly described and ascertained in and by the following statement:—

The present invention relates to an instantaneous coupling device for fluids under pressure, in which the joining of a pipe union with an appropriate pipe end furnished with a flange is effected by the combination, with a sliding ring, of jointed bent levers each presenting arms of different lengths and on the longer of which the ring acts for the purpose of engaging the shorter with the flange of the pipe to be coupled. In this way an energetic gripping action of the joint is produced, from the fact of the difference between the lever arms, and a wedging action on the ring preventing it from displacing itself backwards of its own accord, and that without it being necessary to have recourse to special arrangements for bolting the said ring at the engaged position of the levers, or to proceed to a screwing or rotary movement of one of the parts over the other. The joint may, more particularly, be constituted by a body comprising a chamber within which the other part of the joint may be introduced, which rests or bears on a resilient packing assuring fluid-tightness of the joint. The connection is effected by means of claws which project into the said chamber and are pivoted in slots formed in the joint; the said claws, being extended beyond their point of articulation by slotted arms which penetrate slots formed in the controlling ring or sleeve are operated by the latter by means of an open ring engaging the slots of the said arms.

This instantaneous joint is more particularly applied in the case where it is desired to have forced lubrication with oil, grease and so on. In this case the joint which is connected to the piping of the delivery mechanism of a pump or the like, may be secured as desired by the operation of the sleeve actuating the claws, upon tht connecting flangt with which the lubricator must be provided for that purpose. This flange may be formed upon the cap which closes the

lubricator and which comprises an opening constituting a seat for the obturator subjected to the action of an internal spring.

The accompanying drawings illustrate, by way of example, a constructional form of the invention.

Figure 1 shews partly in elevation and partly in vertical section, a constructional form of the instantaneous joint forming the subject matter of the invention.

Figure 2 is a corresponding section plan.

Figures 3 and 4 shew in vertical section taken on line X Y and in plan, respectively, a constructional form of ball lubricator which has been more particularly designed for use in conjunction with the instantaneous joint in the case of forced lubrication.

The instantaneous joint comprises two main parts, one the body *a* and the other the controlling sleeve *b* adapted to slide on the body *a*.

The body *a* which constitutes a kind of a cup for the reception of the member upon which the joint is to be secured, is formed in the edge defining the said cup, with a certain number of slots receiving the levers c^1 c^2 c^3 forming claws. These levers c^1 c^2 c^3 are pivotally connected to the body *a* by means of an open ring *f* located in a groove suitably disposed for that purpose. The levers also penetrate the corresponding slots formed in the sleeve *b* which is adapted to be displaced longitudinally with respect to the body *a*. Each lever is provided with a nose or tooth for connecting purposes, projecting into the cup of the body *a* and constitutes with its other arm, a controlling fork. These forks are connected with one another by an open ring *e* disposed in a groove formed in the displacable sleeve *b*. The latter is also formed with a groove in which another ring *g* is located which according to its displacements, may move in one direction or the other, engage in the grooves *k* formed in the body *a*, the latter being thus locked in the extreme positions which it may occupy. Another ring *h* serves as an abutment.

A rubber ring *i* is provided at the bottom of the cup and serves as a bearing for the member G to be connected, the claws c^1 c^2 c^3 acting in a manner to apply the same onto the said ring *i* which is compressed and forms a fluid-tight joint.

It will be observed that in the position shewnin Figure 1 the sleeve *b* being pushed back on the body *a* and towards the member G to be connected, the claws c^1 c^2 c^3 project within the body *a* and bearing on the flange *d* of the other part of the coupling G they push the latter onto the inner rubber ring *i*. It will be noted that any tractive effort exerted on the body *a* cannot, in any case, produce separation of the joint.

On the contrary, when the sleeve *b* is drawn downwards, the ring *e* belonging to the latter operates the levers c^1 c^2 c^3 and permits of the disengagement of the member G previously connected; the sleeve *b* being locked in this position by the engagement of the ring *g* in the corresponding groove *k*.

This instantaneous joint which may be used for ensuring the junction of the two conduits wherein any fluid circulates and in particular, wherein any fluid under pressure circulates, may be used particularly in the case of forced lubrication with oil or grease. To this end recourse may be had to a ball lubricator forming an obturator and comprising an external flange for securing and fixing the joint (Figures 1 and 2).

Referring to Figures 3 and 4, this lubricator is constituted by a hollow body A formed with a conduit D for the lubricant. A screw-threaded extension permits of placing the lubricator in place. In the chamber within the body A which is formed with a screw-thread, a plug B is screwed, provided with the flange on which the connecting claws c^1, c^2 c^3 (Figures 1, 2) are secured, so as to effect a joint with the pumps intended to deliver the lubricant. In the illustrated example, the plug B is, moreover, hollowed out internally so as to receive a ball C constantly pushed against its seat by an inner spring R thus ensuring closure of the lubricator.

Having now particularly described and ascertained the nature of my said invention and in what manner the same is to be performed, I declare that what I claim is:—

1. Instantaneous joint for pipes conveying fluids under pressure, particularly applicable to lubricators, characterised by the fact that the two parts of the coupling are united or separated from one another by the mere longitudinal displacement, on one of the parts, of an operating ring displacable against the longer arms of bent levers, pivoted on this part of the coupling, and the shorter arms of which also project or not into the interior of the latter, in order to bear upon the other part which is engaged therewith and to apply it with force against the fluid-tight washer ensuring the joint, or to release the said part. substantially as described.

2. A constructional form of the instantaneous joint set forth in Claim 1, characterized by the fact that in the slots of a hollowed body comprising within a fluid-tight jointing ring, pivotally connected levers or claws are provided, extended by fork-shaped arms, these levers being displaced in such a manner that their noses or teeth project or do not project into the hollow space within the said body in order to rest upon or disengage the flange belonging to the other part of the joint when a sliding sleeve is displaced upon the aforesaid body, the sleeve being formed with slots for the levers or claws and carrying an operating device engaging in the slotted arms of the latter.

3. Application of the joint set forth in Claims 1 and 2, more particularly in the case of forced lubrication, characterised by the fact that the joint which depends, for example, from the delivery piping of a pump, can be secured or separated, as desired, from the lubricator which comprises, to this end, a flange or other fixing means co-operating with the fixing claws or levers, the said flange belonging to a plug which closes the body of the lubricator and the opening of which forms a seat for an obturator such as a ball or valve subjected to the action of an inner spring.

Dated this 24th day of February, 1915.

HASELTINE, LAKE & Co.,
28, Southampton Buildings, London, England, and
60, Wall Street, New York City, U. S. A.,
Agents for the Applicant.

Hereford: Printed for His Majesty's Stationery Office, by The Hereford Times Ltd.
[Wt. 106A—50/10/1924.]

A.D. 1906. Oct. 4. N.° 21,893.

ALLEY & *another's* COMPLETE SPECIFICATION.

(1 SHEET)

[This Drawing is a full-size reproduction of the Original.]

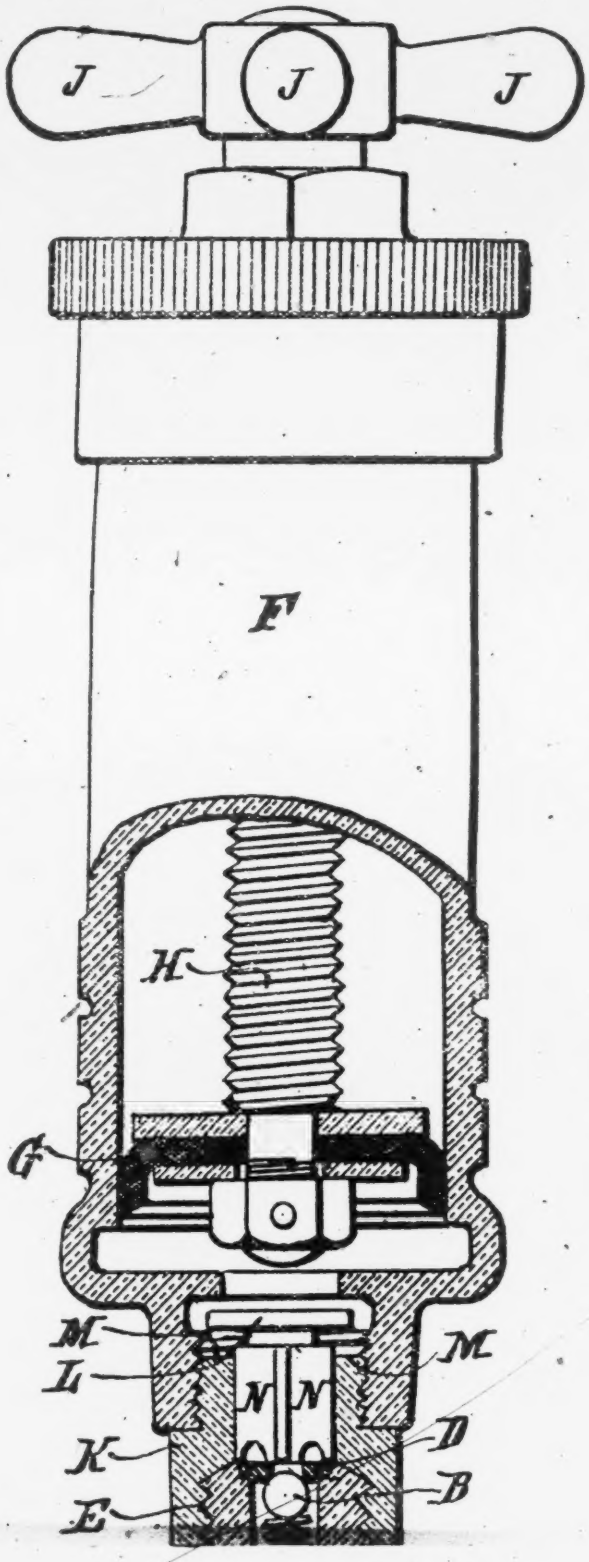

[This Drawing is a full-size reproduction of the Original.]

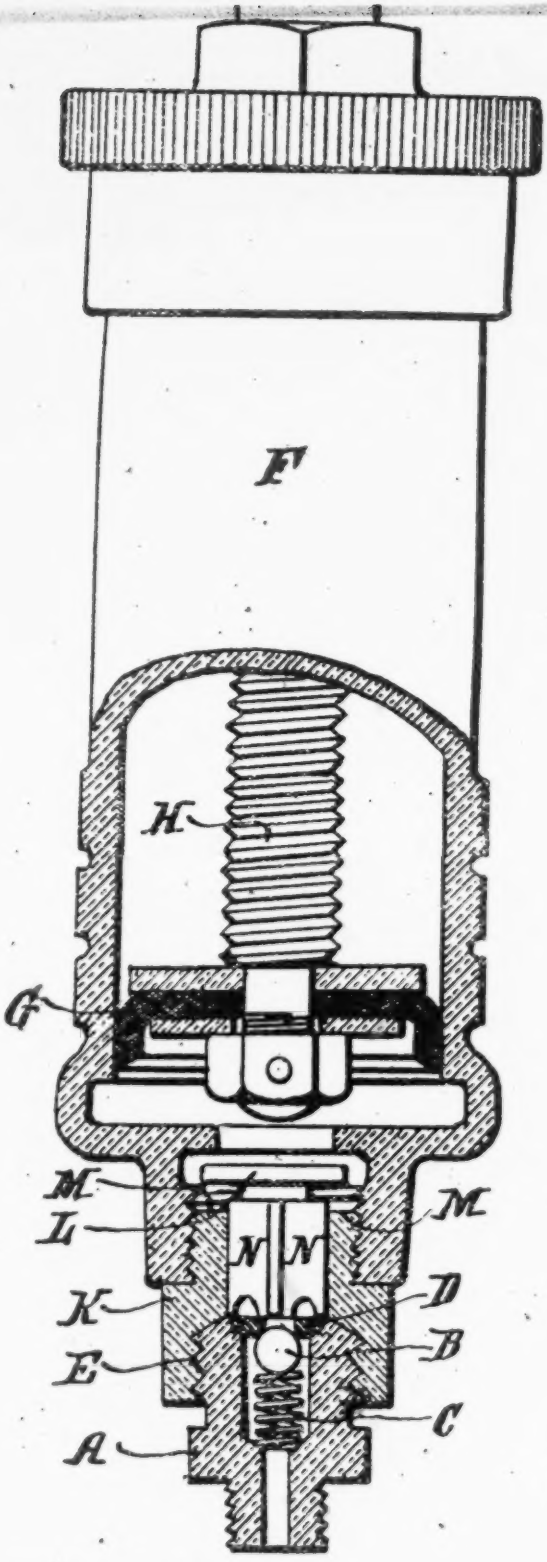

COMPLETE SPECIFICATION.

"Improvements in connection with Lubricators."

We, Stephen Evans Alley, of Sentinel Works, Polmadie, in the County of Glasgow, North Britain, Engineer, and George Woodvine, of the same address, Foreman Engineer, do hereby declare the nature of this invention and in what manner the same is to be performed to be particularly described and ascertained in and by the following statement;—

Grease and heavy oil lubricators are usually made with removable caps by which they are filled by hand or from the inserted nozzle of a pump. This form is necessary as it is impossible to force the heavier oils and grease past the valve in those types of lubricators used for lighter oils and which have a self-closing filling valve. There are many objections to the use of the ordinary grease lubricators; the caps are easily mislaid, for instance, and in filling the lubricator, when it is in a dirty situation, one is very apt to introduce grit along with the grease.

This invention has for its object to adapt the self-closing valve type of light oil lubricator for use with heavy oil and grease; that is to say, to provide means for filling this form of lubricator with grease. The invention consists essentially in applying to a grease pump of known form a nozzle adapted to lock upon and form a tight connection with a light oil lubricator of the type referred to and adapted to receive the nozzle. Considerable pressure is required to force the grease past the lubricator valve and there is therefore provided in the pump nozzles a valve of known form closing the passage in the nozzle and adapted to be operated by the lubricator top when the pump is placed in position, this valve, of course, closes immediately the pump is withdrawn from the lubricator and so prevents the extrusion of grease then.

In order that the invention and the manner of performing the same may be properly understood, there is hereunto appended a sheet of explanatory drawings showing in sectional elevation an example of the carrying out of the novel combination.

According to this simple example the lubricator, A, is of the cylindrical type having a non-return ball valve, B, pressed by a spring, C, against a seat piece, D, secured in the top of the lubricator. The lubricator has cut upon its exterior a screw thread, E, of comparatively coarse pitch.

The pump, F, is of the ordinary barrel type in which a cup leather plunger, G, operated by a screwed rod, H, carrying a handle, J, forces the lubricant out through a nozzle, K. In this nozzle, K, is arranged a tappet valve, L, normally resting upon a seat, M, and so normally closing the normal aperture but the stem or rather guide wings, N, of the valve are of such a length that when the nozzle, K, is secured upon the lubricator, A, the wings, N, bear upon the top of the latter and the valve, L, is raised from its seat as shown in the drawing. Upon depression of the plunger, G, by operation of the handle, J, lubricant flows past the open valve, L, through the nozzle, K, to the lubricator, A, forcing the ball valve, B, therein off its seat.

Upon withdrawal of the pump from the lubricator the valves, B, L, immediately close—the former under the effort of the spring, C^1 the latter under the pressure of the lubricant in the pump.

Thus the awkward and messy operation of removing caps and filling them by means of a pump (which usually extrudes more grease than is required) or from an open can by means of the fingers or a stick is entirely obviated.

It is obvious that the means for securing the pump upon the lubricator may

be modified—for example, instead of a coarse pitch screw a bayonet or like catch may be used—and that the form of valve used in its nozzle may be varied.

Having now particularly described and ascertained the nature of our said invention and in what manner the same is to be performed, we declare that what we claim is:—

—1— A lubricating device comprising in combination a lubricator fitted with a non-return valve, a pump adapted to be connected therewith and a valve in the pump nozzle normally closed but opened automatically upon connection of the pump to the lubricator, as described.

—2— A lubricating device comprising in combination a lubricator of known cylindrical form externally screwed and containing a non-return valve, a pump of known form having a nozzle screwed counterpart to the lubricator, and a tappet valve on a seat within the nozzle and adapted to be raised off that seat by contact of its stem with the top of the lubricator when lubricator and pump are screwed together.

Dated this Eighteenth day of March, 1907.

EDMUND HUNT & Co.,
Chartered Patent Agents,
121 West George Street, Glasgow,
Applicants' Agents.

Redhill: Printed for His Majesty's Stationery Office, by Love & Malcomson, Ltd.—1907.

A.D. 1912. Aug. 15. N° 18,727
DE GREY'S COMPLETE SPECIFICATION. (1 SHEET)

[This Drawing is a reproduction of the Original on a reduced scale]

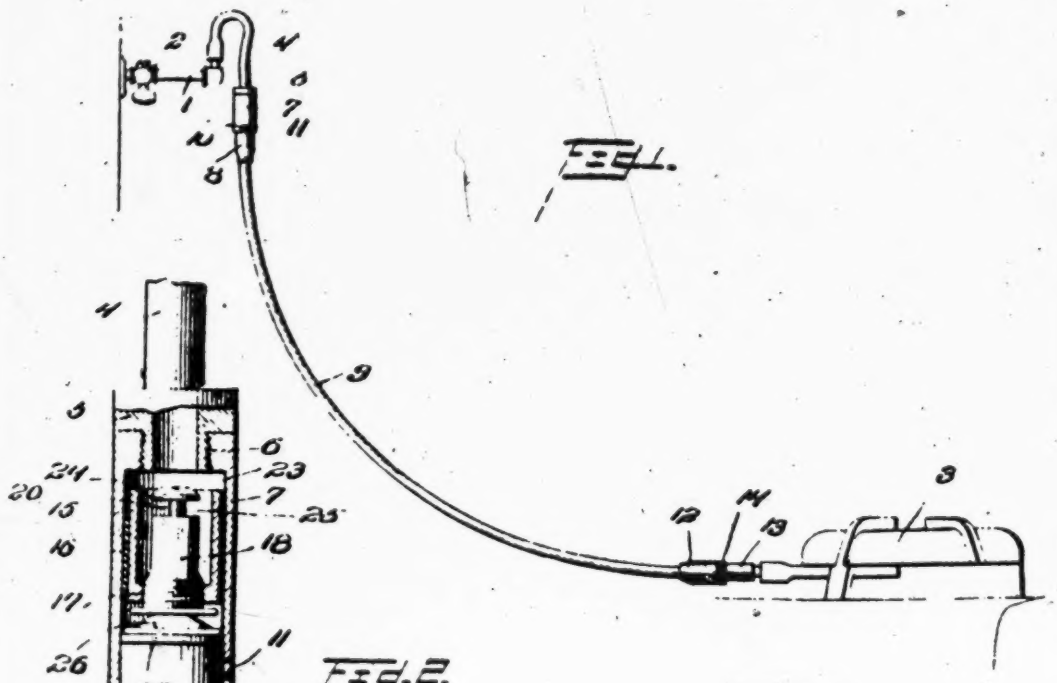

FIG. 1.

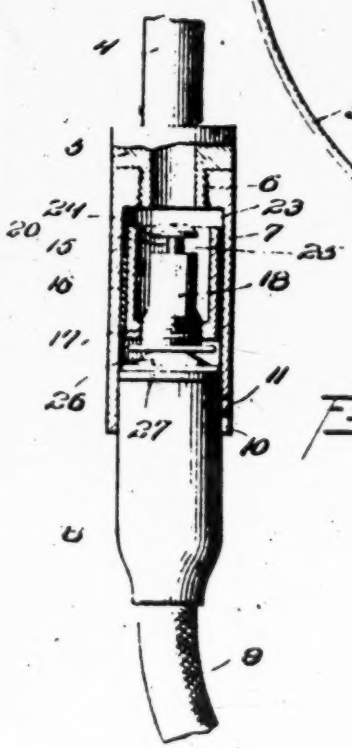

FIG. 2.

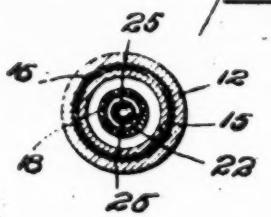

FIG. 4.

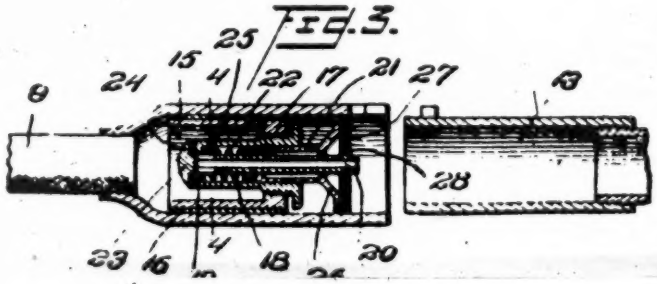

FIG. 3.

[This Drawing is a reproduction of the Original on a reduced scale]

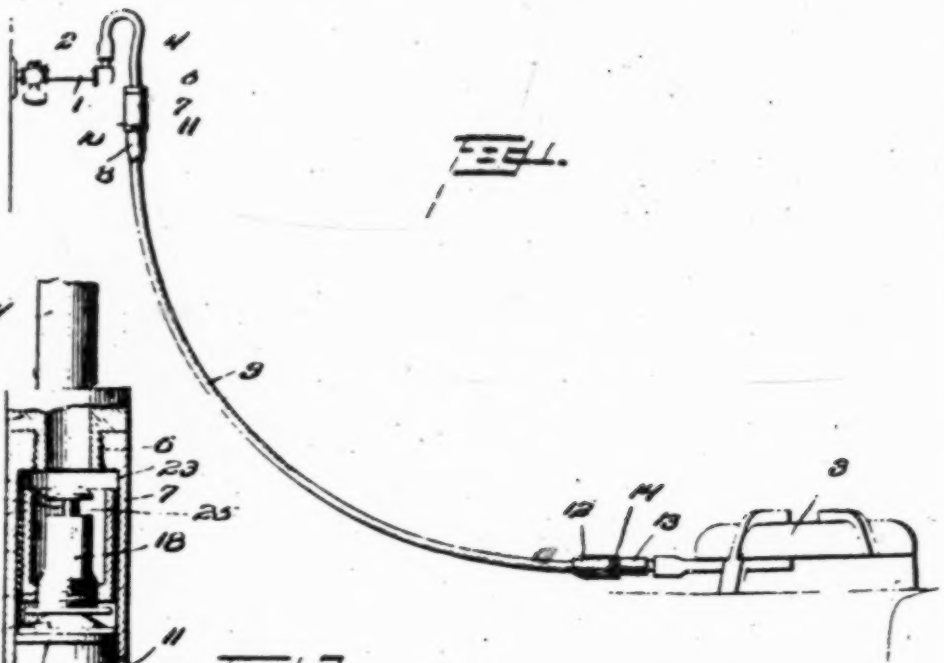

FIG. 1.

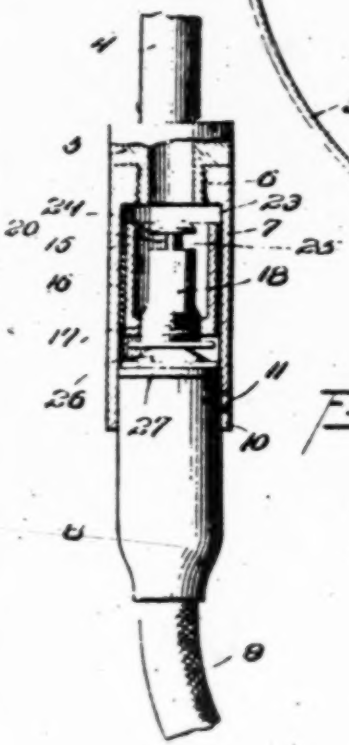

FIG. 2.

FIG. 4.

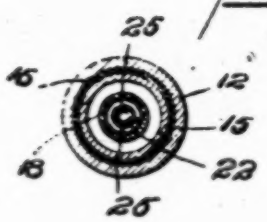

FIG. 3.

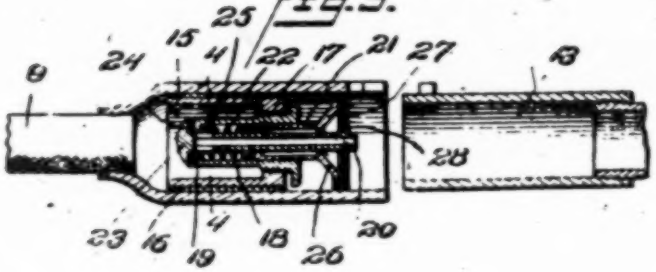

N° 18,727 A. D. 1912

(*Under International Convention.*)

Date claimed for Patent under Patents and Designs Act, 1907, being date of first Foreign Application (in the United States), } *15th Aug., 1911*

Date of Application (in the United Kingdom), 15th Aug., 1912

At the expiration of twelve months from the date of the first Foreign Application, the provision of Section 91 (3). (a) of the Patents and Designs Act, 1907, as to inspection of Specification, became operative

Accepted, 30th Jan., 1913

COMPLETE SPECIFICATION.

Safety Connections for Gas Fixtures.

I, Gerald de Grey, of 1588, N. 52nd Street, Philadelphia, in the County of Philadelphia, and State of Pennsylvania, United States of America, Clerk, do hereby declare the nature of this invention and in what manner the same is to be performed, to be particularly described and ascertained in and by the following statement:—

My invention relates to safety connections for gas fixtures of the type in which a safety or non-return valve is provided and retained open by a tubular connection or abutment while the parts are assembled for use, the valve automatically closing by spring or the like pressure when the parts are again detached.

The object of the present invention is to provide an improved connection which can be utilized at both ends of a gas tube, one of which serves as a connection between the gas fixture or source of gas supply, and the tube, and the other between the tube and the burner or stove.

A further object is to provide a gas connection having two members, one adapted to telescope within the other and to be securely locked therein, and when so projected one within the other, the gas controlling valve will be opened, and when the members are separated either through accident or design, the valve will automatically close.

With these and other objects in view, the invention consists in certain novel features of construction and combinations and arrangements of parts as will be more fully hereinafter described and pointed out in the claims.

In the accompanying drawings:

Figure 1 is a view in elevation illustrating my improvements.

Figure 2 is a view partly in longitudinal section and partly in elevation illustrating the connection between the source of gas supply and the tube.

Figure 3 is a view in longitudinal section of the connection at the burner or stove, showing the two members apart, and

Figure 4 is a view in cross section on the line 4—4 of Figure 3.

[*Price 8d.*]

1 represents a gas bracket having the ordinary valve 2, and 3 is a burner or stove. On the gas bracket 1, a goose neck 4 is supported, and the enlarged lower end 5 of this goose neck is screw-threaded as shown at 6 to screw into the threaded end of member 7 of my improved connection.

Member 7, and its co-operating member 8, are both cylindrical in form, the latter fixed to a flexible gas tube 9, and adapted to telescope with in the member 7. Member 7 is provided with an L-shaped notch 10 to receive a pin 11 on member 8, so that an ordinary bayonet joint is formed to lock the members together.

On the opposite end of the tube 9, a member 12 is secured, and corresponds to the member 7. The member 13, which corresponds to member 8 is screwed onto the burner 3, and telescopes within member 12, and is secured by a bayonet joint 14, such as above described in connection with the members 7 and 8.

The members 7 and 12 each contain improved valve structures which are precisely alike, and in fact, these connections at the respective ends of the hose, are alike, except in the manner of attachment which necessitates a slight change in the structure.

As these valves are precisely alike, the description hereinafter of one will apply alike to both.

In cylindrical members 7 and 12, metal sleeves 15 are located, and are held by rubber sleeves 16 around the same, said rubber sleeves serving to make the connection gas tight. One end of metal sleeve 15 has a screw-threaded opening 17 to receive an externally screw-threaded tube 18.

At the inner end of this tube 18, an internal flange 19 is provided, and constitutes a guide for a tubular valve stem 20 which is secured in a guide sleeve 21 mounted to slide in tube 18.

Around the stem 20 in the sleeve 18, between the guide sleeve 21 and the flange 19, a coiled spring 22 is located, and normally holds a valve 23 secured to the inner end of stem 20 on its seat. That is, the valve 23 with its facing washer 24, is held against the end of tube 18, and openings 25 which are provided in the stem 20 adjacent the valve 23, are held within the tube 18, so that the passage of gas through the stem is prevented.

The forward end of the guide sleeve 21 is provided with a flaring disk 26 against which a disk 27 of rubber or other suitable material is positioned, and this disk 27 is provided with a central opening 28 through which the tubular valve stem 20 projects.

When the smaller member is forced inside of the larger member, it engages disk 27, and forces the valve stem 20 longitudinally against the action of the spring 22, so that the openings 25 are exposed back of the end of sleeve 18 as shown in Figure 2. The gas may then flow through the valve stem to the burner, as the bayonet joint above described secures the members in this position.

Should the members become separated either through accident or design, spring 22 will immediately close the valve and shut off the supply of gas, thus preventing any escape of gas and the danger which might result therefrom.

This automatic shutting off of the gas is true at either point of connection, because the valve is within the parts 7 and 12, so that if the connection is broken at either point, the gas will be shut off.

The parts are so constructed that the valve may be readily removed for purposes of repair, as it is simply necessary to draw the sleeve 15 with its outer rubber sleeve 16 from within the cylindrical section, and force it back into place when the valve is repaired.

Various slight changes might be made in the general form and arrangement of parts described without departing from my invention, and hence I do not limit myself to the precise details set forth, but consider myself at liberty to make such changes and alterations as fairly fall within the spirit and scope of the appended claims.

925

Safety Connections for Gas Fixtures.

Having now particularly described and ascertained the nature of my said invention, and in what manner the same is to be performed, I declare that what I claim is:—

1. An improved safety connection for gas fixtures, comprising in combination two cylindrical members, one member adapted to telescope within the other, means for locking the members in telescoped position, a valve in one member moved by the other to open position, said valve comprising a sleeve, a tubular stem movable through said sleeve and having openings therein, a valve on the end of said stem, a guide sleeve secured around said stem and movable in the first mentioned sleeve, a coiled spring around the stem pressing against the guide sleeve and normally holding the valve in closed position, a flaring disk on the end of said guide sleeve, a second disk against the guide sleeve and having an opening through which the stem projects, and said last-mentioned disk engageable by the smaller member, substantially as described.

2. A connection as claimed above, comprising in combination two cylindrical members, one member adapted to telescope within the other, means for locking the members in telescope position, a valve in one member moved by the other to open position, said valve comprising a sleeve, a tubular stem movable through said sleeve and having openings therein, a valve on the end of said stem, a guide sleeve secured around said stem and movable in the first-mentioned sleeve, a coiled spring around the stem pressing against the guide sleeve and normally holding the valve in closed position, a flaring disk on the end of said guide sleeve, a second disk against the guide sleeve and having an opening through which the stem projects, and said last-mentioned disk engageable by the smaller member, a sleeve frictionally held in the larger section, a packing sleeve around said last-mentioned sleeve, and said first-mentioned sleeve screwed into said frictionally held sleeve, substantially as described.

Dated this 15th day of August, 1912.

J. S. WITHERS & SPOONER,
Chartered Patent Agents,
323, High Holborn, London,
Agents for the Applicant.

Redhill: Printed for His Majesty's Stationery Office, by Love & Malcomson, Ltd.—1913.

A.D. 1912. Nov. 14. № 26,134.
SHARPE'S COMPLETE SPECIFICATION.

(1 SHEET)

[This Drawing is a reproduction of the Original on a reduced scale]

FIG. 1.

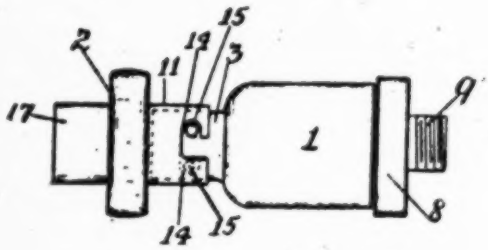

FIG. 2.

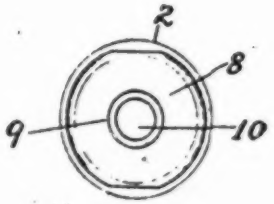

FIG. 3.

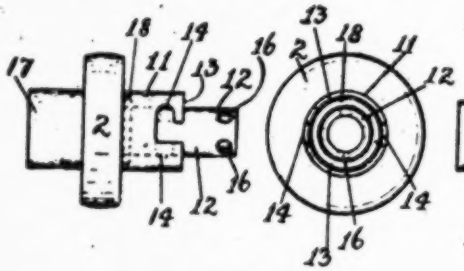

FIG. 4.

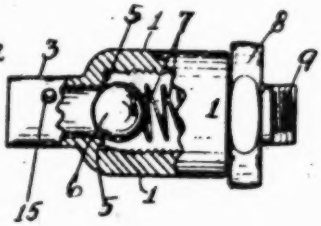

FIG. 5.

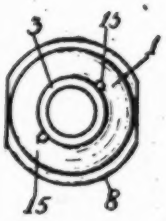

FIG. 6.

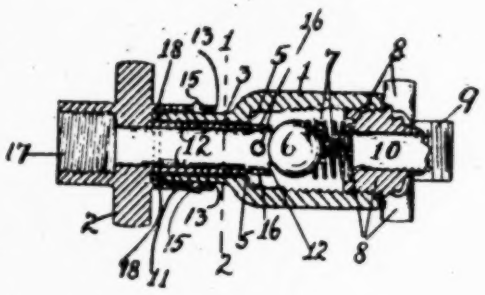

FIG. 7.

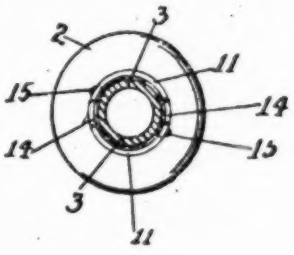

FIG. 8.

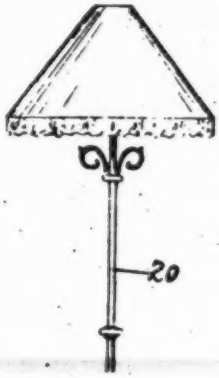

FIG. 9.

[This Drawing is a reproduction of the Original on a reduced scale]

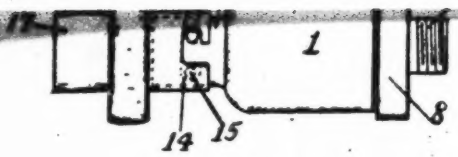

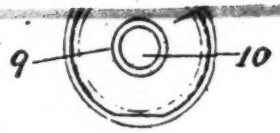

FIG. 3. FIG. 4. FIG. 5. FIG. 6.

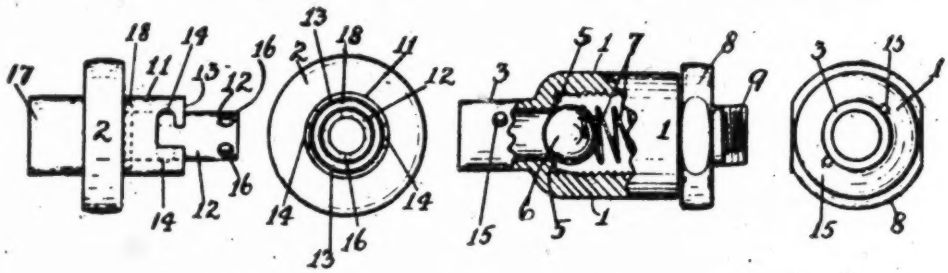

FIG. 7. FIG. 8.

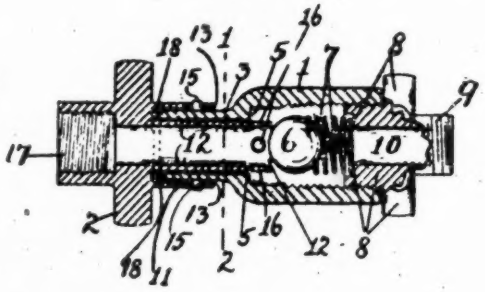

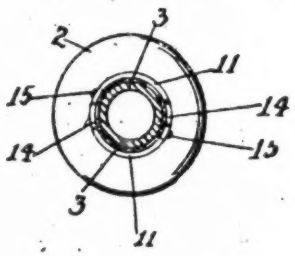

FIG. 9.

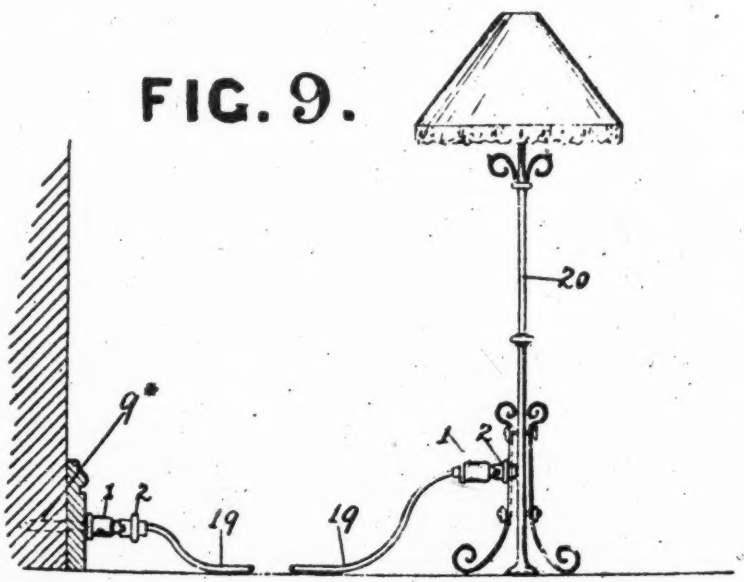

N° 26,134 A. D. 1912

Date of Application, 14th Nov. 1912

Complete Specification Left, 13th May, 1913—Accepted, 9th Oct., 1913

PROVISIONAL SPECIFICATION.

An Improved Coupling Device or Union for Connecting Flexible or other Tubing to Gas Brackets or Pipes, Water Pipes and the like.

I, William Charles Sharpe, Junior, of "Eastfield," Louth, in the County of Lincoln, Lighting and Heating Engineer, do hereby declare the nature of this invention to be as follows:—

This invention relates to an improved coupling device or union for use with flexible or other tubing or pipe connections, of say for instance, a portable gas standard lamp, portable reading lamp, gas bracket, pendant, gas stove or other device, for connecting such tubing or pipe connection to a gas bracket or supply pipe, and has for its object an extremely simple device whereby the flexible or other tubing or connection can be readily connected to and disconnected from the gas bracket or pipe from which the supply of gas is obtained, or it may be to the device for which the supply of gas or the like is required, without it being necessary to turn a tap to turn on or shut off the gas, the connecting or disconnecting of the device automatically effecting this.

In its broad essentials, my improved coupling device or union consists of two main portions, the one a hollow body portion adapted to be connected to a gas bracket or pipe, or the like, and provided with a seat inside it, and a ball, cone or the like backed by a spring to bear on the seat beforementioned under normal circumstances to close the outlet, that is, when gas or the like is not required for use, the second portion being also tubular and having a tubular extension provided with holes at or near its end to be passed into the outlet end of the first or body portion, and with a second tubular extension to which one end of the flexible tubing is connected, the said two main portions being adapted to engage by any suitable means, as for instance by one portion being provided with a peripheral projection, or more than one to engage a bayonet slot or slots in the other portion.

The first or body portion is provided with means whereby it con be connected to a gas bracket, or pipe or the like, aconvenient means consisting in providing the inlet end with a nipple adapted to be screwed into or on to said body portion and into or on to the end of the gas bracket, or into or on to a nipple with which the gas bracket, pipe or the like is provided.

When the first or body portion is fitted, the ball, cone or the like therein beds firmly on the seat in the said body portion and effectually closes the outlet so that gas cannot pass therethrough, said ball or the like being so firmly seated that there is no possibility of there being any escape of gas.

When it is required to obtain a supply of gas, for say a portable standard gas lamp as an instance, the second tubular or completing portion of the device to which the flexible tubing of the lamp is connected, is coupled to the first or body portion by pushing the perforated extension into the outlet end of the body portion, which act forces the ball or the like in the body portion off its seat, with the result that gas is free to pass between the ball or the like and

[*Price 8d.*]

479

674

its seat and so through the holes in the tubular extension of the second or completing portion and into the flexible tubing and thence to the burner of the lamp, the two portions of the coupling or union being locked by giving the completing portion a part of a turn whereby the peg or pegs engage the bayonet slot or slots in the other portion, so effectually keeping the ball valve open.

By disconnecting the completing portion from the body portion, the ball valve is released and returns to its seat and so cuts off the gas supply.

A washer may be placed on the perforated extension of the completing portion of the device for the end of the outlet portion of the body portion to bed on when the connection is made, to entirely obviate any liability of gas escaping.

Although I have described my improved coupling device or union in its application to a gas bracket, pipe or the like, I would have it understood that I do not limit myself to its use as a coupling to a gas supply, but that it is suitable for a coupling where water is required, or for other purposes for which it could be satisfactorily used.

With a coupling or union in accordance with my invention, gas, water and like pipes or sources of supply can be easily and quickly tapped to obtain a supply of gas, water and the like for any movable or even other than movable device for which the supply is required the connection being as easily made or broken as an electric circuit is completed or broken by means of a wall or like plug.

Dated the Thirteenth day of November, 1912.

LOUIS E. KIPPAX,
Gough Chambers, Savile Street, Hull,
Patent Agent for the Applicant.

COMPLETE SPECIFICATION.

An Improved Coupling Device or Union for Connecting Flexible or other Tubing to Gas Brackets or Pipes, Water Pipes and the like.

I, William Charles Sharpe, Junior, of Clacton House, Heath Park, Romford, in the County of Essex, late of "Eastfield," Louth, in the County of Lincoln, Lighting and Heating Engineer, do hereby declare the nature of this invention and in what manner the same is to be performed, to be particularly described and ascertained in and by the following statement:—

This invention relates to that kind of coupling for use with flexible tubing or the like for connecting portable standard lamps, reading lamps, gas stoves or the like with a gas bracket, or gas supply pipe or the like, to allow of gas being supplied to the lamp, stove or the like, and which consists of two tubular members, the one adapted to engage the other, the one member being screwed on or otherwise suitably connected to the gas supply pipe or the like and the other having connected to it the flexible tube or the like which makes connection with the lamp, stove or the like to which gas is to be supplied, by the engaging of which two tubular portions comprising the device, a valve is opened in the device which allows the gas to pass to the flexible tube or the like and thence to the lamp, stove or the like, and by the dis-connection of which two portions the valve is caused to close and shut off the supply of gas, without it being necessary to turn a tap to turn on or to shut off the gas supply.

The present invention has for its object to provide an extremely simple construction of coupling device of the type referred to in which the portion which acts on the valve to open it and through which the gas passes to the

tube and thence to the lamp, stove or the like for which a supply of gas is needed, is actually a part of one of the two main portions of the device, and the valve itself is of an extremely simple nature.

In order that my invention may be readily understood and carried into effect, I have appended hereunto a sheet of explanatory drawings of which Fig. 1 is a longitudinal view of my improved coupling device, Fig. 2 is a view looking in at the right hand end of same; Fig. 3 is a view of the tubular extension detached, and Fig. 4 is a view looking in at the right hand end of same. Fig. 5 is a view of the main or body portion partly in section, and Fig. 6 is a view looking in at the left hand end of same. Fig. 7 is a longitudinal section of the complete coupling, Fig. 8 is a section on the line 1—2 of Fig. 7 assuming Fig. 7 to be complete, and Fig. 9 shows by way of example, the application of my improved coupling to a gas supply pipe behind a skirting board to make connection with a standard lamp, two of the couplings being shewn, one connected to the gas supply pipe and the other to the lamp.

The same reference characters are employed to indicate the same parts in all the figures.

Referring to the drawings, 1 and 2 are two tubular portions, 1 being the main or body portion provided with a reduced end 3, the hole through such body portion being reduced in the reduced end to provide a seat 5 for a ball, cone or the like 6 which is normally maintained pressed into contact with the seat 5 to close the passage by a spring 7, one end of which bears on such ball, cone or the like, and the other against a screw plug or a suitable cap or other completing piece 8 which is provided with an externally or internally screw-threaded nipple or projection 9 having a central bore 10, adapted to be screwed into or on to the end of a gas bracket or a gas supply pipe 9* (Fig. 9) or into or on to a nipple or the like provided on such gas bracket, gas supply pipe or the like. The second tubular member 2 has two concentric portions or extensions 11 and 12 to provide an annular space 13 for the admission of the reduced end of the tubular member 1, the outer extension 11 being according to one and a convenient mode, provided with a bayonet slot or slots 14 to receive a projection or projections 15 on the reduced portion 3 of the body portion 1 to enable the two portions 1 and 2 to be locked together, the inner tubular portion 12 of the tubular portion 2 having a hole or holes 16 near its end and being sufficiently long for its end to press on the ball or the like 6 to force such ball or the like off its seat when the two portions 1 and 2 are placed together and locked, 17 being the extension of the second portion 2 to which one end of the flexible tubing which runs from the coupling to the gas lamp, stove or the like is connected. A leather, asbestos or other suitable washer 18 which would not be readily destroyed by the gas, is placed on the perforated extension 12 of the portion 2 for the end of the reduced portion 3 of the body portion to bed against to entirely obviate any liability of leakage of gas occurring when the two portions 1 and 2 are coupled up and the valve opened.

When the first or body portion 1 is connected to the gas bracket, gas supply pipe or the like, and the second portion 2 is not in engagement therewith, the ball cone or the like 6 beds so firmly on the seat 5 in such body portion 1 as to so effectually close the passage as to absolutely prevent any escape of gas.

Two of the couplings are preferably employed, one at each end of the flexible tubing or the like, the one to make the connection between the tubing or the like and the gas supply pipe, and the other to make the connection between the opposite end of the said tubing and the lamp, stove or the like for which a supply of gas is required, thereby to allow of coupling and uncoupling at either end of the tubing, the arrangement of each being such that uncoupling in each case releases the ball or like valve and allows it to return to its seat.

When it is required to obtain a supply of gas for say a portable standard gas lamp, by way of example, the tubular completing portion 2 of the coupling to which the flexible tubing 19 of the lamp 20 (Fig. 9) is connected, is coupled

to the first or body portion 1 by pushing the perforated extension 12 into the reduced outlet end 3 of the body portion 1, if the body portion 1 is the fixed portion, which act forces the ball or the like 6 off its seat 5, with the result that gas is free to pass between the ball or the like and its seat and so through the holes 16 in the extension 12 of the second or completing portion 2 and into the flexible tubing 19 and thence to the burner of the lamp, the two portions of the coupling being locked as hitherto by giving the portion 2 a part of a turn whereby the projection or projections 15 on the portion 1 engage the bayonet slot or slots 14 in the outer extension 11 of the portion 2, so effectually keeping the ball or the like off its seat. By disconnecting the portion 2 from the portion 1, the ball or the like 6 is released and returns to its seat and so cuts off the gas supply.

Although I have described my improved coupling or union in its application to a gas bracket, gas supply pipe or the like, I would have it understood that I do not limit myself to its use as a coupling to a gas supply, but that it is suitable as a coupling where water is required, or for other purposes for which it could be satisfactorily used.

Having now particularly described and ascertained the nature of my said invention and in what manner the same is to be performed, I declare that what I claim is:—

(1) In a coupling or union of the type specified for the purpose mentioned, a tubular portion having a seat therein, a ball, cone or the like to normally bed on such seat, a spring backing the ball or the like and bedding against a screw plug or the like in such body portion, said plug or the like having a nipple or the like adapted to screw into or on to the pipe, or a nipple or the like from which the supply of gas, water or the like is being taken, a second tubular portion or completing piece having a perforated extension adapted to pass into one end of the main or body portion and a second or outer portion to pass over said end of the main or body portion and provided with means to engage such body portion whereby the two portions become locked together and as a result the ball or the like is forced off its seat by the perforated extension of the second or completing portion, the said second or completing portion being adapted to receive the flexible tubing or the like which forms the connection between the coupling and the device to be supplied with gas or the like, or itself to be connected to the lamp or the like to be supplied with gas and the main or body portion to take the end of the tubing.

(2) The improved coupling substantially as hereinbefore described and illustrated in the accompanying drawing, and operating as and for the purpose set forth.

Dated the Tenth day of May, 1913.

LOUIS E. KIPPAX,
Gough Chambers, Savile Street, Hull,
Patent Agent for the Applicant.

Redhill: Printed for His Majesty's Stationery Office, by Love & Malcomson, Ltd.—1913.

Fig.1.

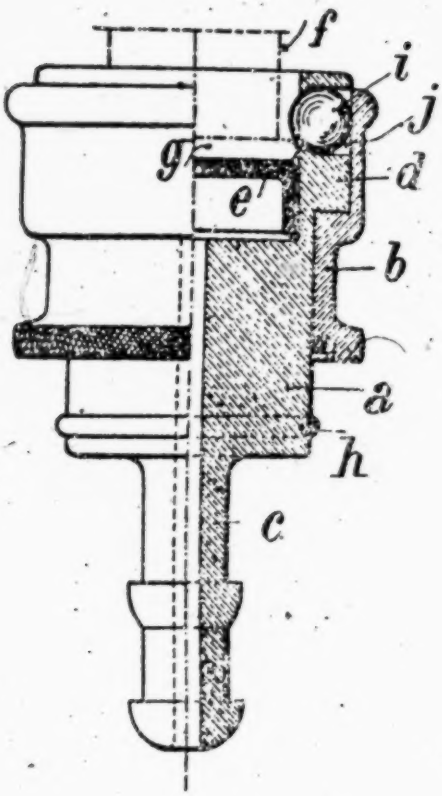

Fig. 2

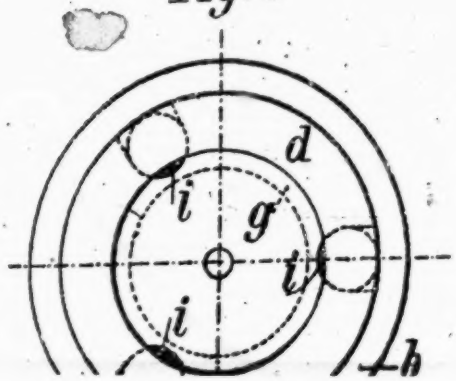

Fig. 1.

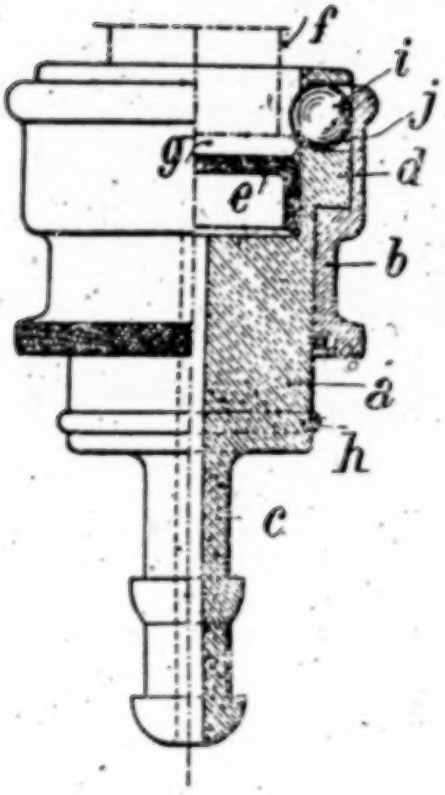

Fig. 2

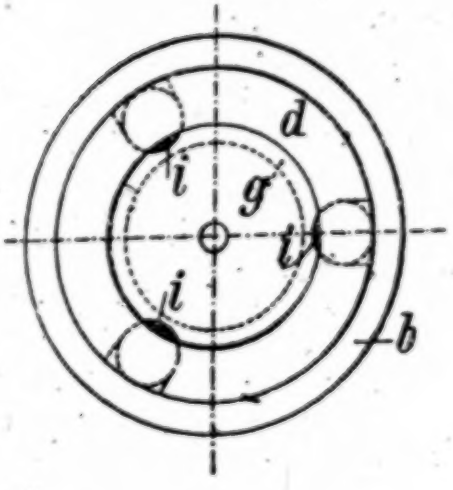

RÉPUBLIQUE FRANÇAISE.

OFFICE NATIONAL DE LA PROPRIÉTÉ INDUSTRIELLE.

1RE ADDITION
AU BREVET D'INVENTION
N° 468,869

(Stamp)
Library
Jun 29 1916
U. S. Patent Office

V.—Machines.

3.—ORGANES, ACCESSOIRES ET ENTRETIEN DES MACHINES. N° 20.083

Dispositif de raccord instantané pour fluides sous pression et application du dit raccord pour le graissage sous pression.

M. CAMILLE SENG, résidant en France (Aube).

(Brevet principal pris le 24 février 1914.)

Demandée le 23 décembre 1914, à 15 heures, à Paris.
Délivrée le 28 décembre 1915.—Publiée le 22 mars 1916.

La présente addition est relative à une variante de forme d'exécution du dispositif de raccord instantané faisant l'objet du brevet n° 468.869 en date du 24 février 1914.

La caractéristique distinctive de cette variante d'exécution consiste en ce que les griffes constituant les organes d'accouplement du dispositif décrit dans le brevet, sont remplacées par des billes jouant le même rôle.

Sur le dessin annexé et à titre d'exemple:

La fig. 1 représente, partie en élévation, partie en coupe verticale, une forme de réalisation du nouveau raccord.

La fig. 2 est une vue correspondante en plan.

Ce nouveau raccord se compose comme celui décrit au brevet principal, d'un corps tubulaire *a*, chaussé d'une douille de manœuvre *b* susceptible de coulisser sur le corps *a*.

A l'une de ses extrémités, le corps *a* est rétréci de manière à former une tubulure *c* destinée à recevoir le tuyau reliant le raccord à l'appareil d'alimentation: graisseur, pompe ou autre. A son extrémité opposée, le corps *a* forme une tête évidée *d* dans laquelle est logée une rondelle d'étanchéite *e* constituee par un cuir embouti, contre lequel s'applique l'extrémité de la tubulure *f* de l'appareil d'utilisation à raccorder. Cette tubulure *f* comporte à son extrémité un bourrelet *g* avec lequel vient en prise un certain nombre de billes *i* (trois dans l'exemple représenté), disposées à équidistance les unes des autres dans des trous radiaux *j* de la tête *d*.

L'épaisseur de la partie annulaire de la tête *d* et le diamètre des billes *i* sont établis de telle manière que les dites billes font saillie à l'intérieur de l'évidement de la tête *d* lorsque, la douille *b* étant poussée, ces billes s'appliquent contre la paroi interne de la dite douille.

Une bague fendue *h* logée dans une gorge du corps *a* fait saillie autour de celui-ci, afin de limiter la course de déplacement de la douille *b*. Cette course est établie de façon que lorsque la douille *b* est attirée vers l'arrière elle permet le dégagement des billes *i*, mais recouvre encore suffisamment les trous *j* pour empêcher les dites billes de s'échapper.

Dans ces conditions, pour raccorder le corps tubulaire *a* sur la tubulure *f* il suffit,

494

après avoir préalablement déplacé la douille *b* vers l'arrière, d'introduire la dite tubulure *f* dans la tête *d*, de façon que le bourrelet *g* s'applique contre la rondelle d'étanchéité *e*, entre celui-ci et les billes *i*. Dès que les pièces sont ainsi en contact, on pousse la douille *b*. Ce mouvemant a pour effet de faire converger les billes *i* vers l'axe du raccord, de sorte qu'elles glissent contre la partie arrière du bourrelet et l'obligent à s'appliquer avec pression contre la rondelle d'étanchéité *e*.

Pour dégager le raccord, il suffit d'attirer la douille *b* vers l'arrière.

Dans ce nouveau raccord, les manœuvres de raccordement et de désaccouplement peuvent se faire très aisément à l'aide d'une seule main, le seul mouvement à effectuer consistant à faire coulisser rectilignement la douille *b* sous le corps *a*, ce qui d'ailleurs s'effectue par le fait même de l'introduction ou du retrait du raccord.

Ainsi que cela a été indiqué dans le brevet principal, ce dispositif de raccord s'applique généralement pour la jonction de deux tronçons d'une canalisation de fluide quelconque, mais a été plus particulièrement imaginé pour réaliser un graissage sous pression.

Il est à remarquer que la pression du fluide s'exerce à l'intérieur de la chambre formée par le cuir embouti *c* dans le sens de l'application de ce cuir contre l'extrémité de la tubulure *f*.

RÉSUMÉ.

Variante de forme d'exécution du dispositif de raccord faisant l'objet du brevet principal n° 468.869 en date du 24 février 1914, caractérisée en ce que les organes d'emprise du raccord tubulaire avec la tubulure à raccorder consistent en des billes logées dans des trous radiaux du dit raccord et convergeant vers l'axe de celui-ci, pour s'engager avec la dite tubulure lorsqu'on pousse la douille de manœuvre rectilignement dans le sens d'application du raccord, les dites billes se dégageant d'elles-mêmes lorsqu'on tire sur la douille dans le sens du désaccouplement.

CAMILLE SENG.
Par procuration:
Dupont et Elluin.

Pour la vente des fascicules, s'adresser à l'Imprimerie Nationale, 87, rue Vieille-du Temple. Paris (3°).

Fig. 1.

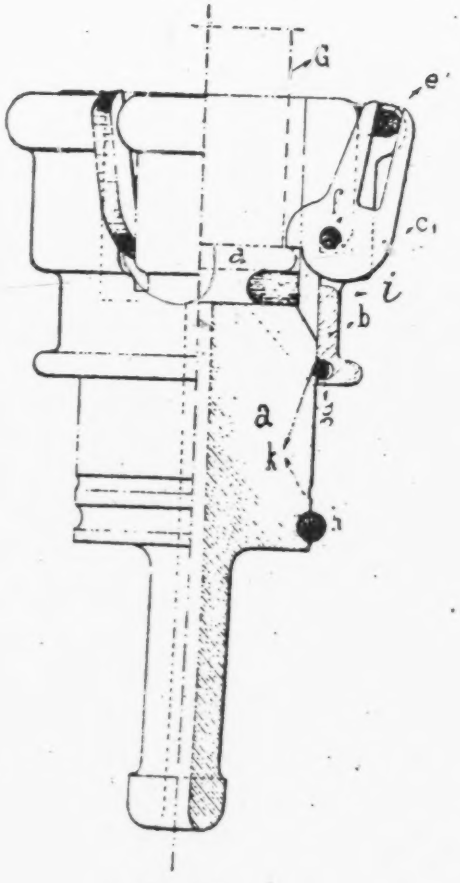

Fig. 3.

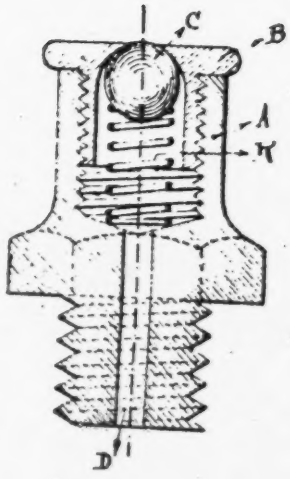

Fig. 2.

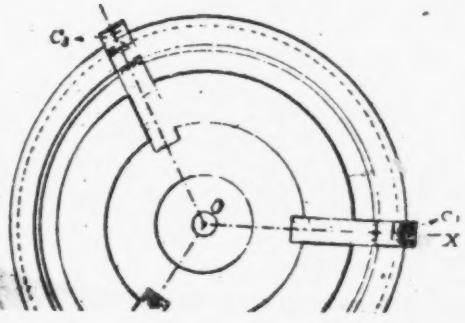

Fig. 4.

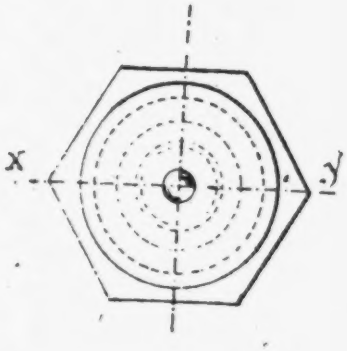

Fig. 1.

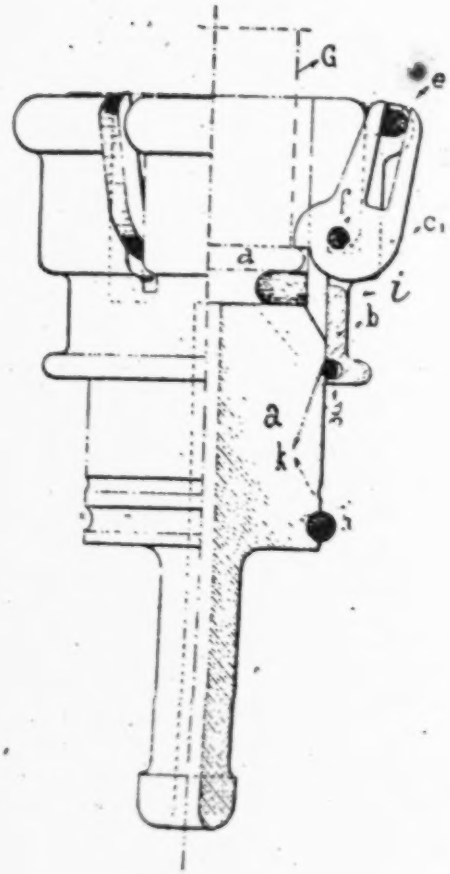

Fig. 2.

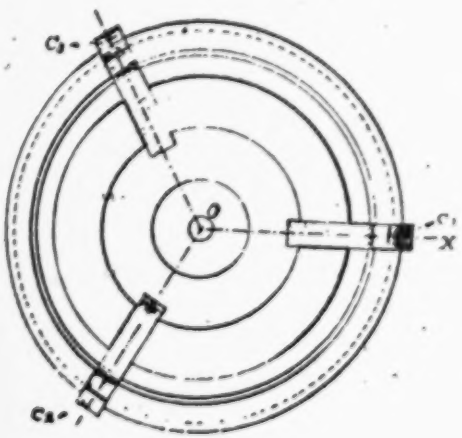

Fig. 3.

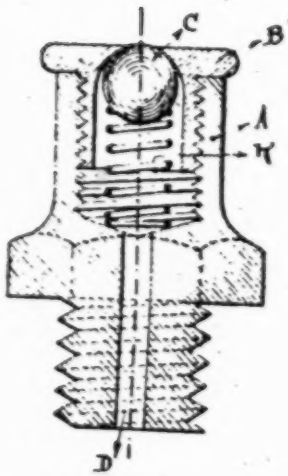

Fig. 4.

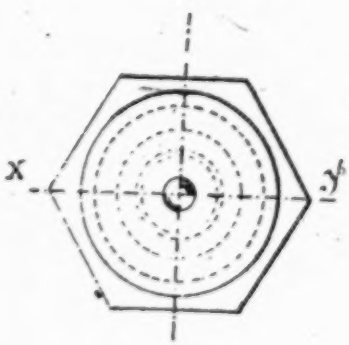

RÉPUBLIQUE FRANÇAISE.

OFFICE NATIONAL DE LA PROPRIÉTÉ INDUSTRIELLE.

(Stamp)
Library
Feb 18
U. S. Patent Office

BREVET D'INVENTION

V.—Machines.

3.—ORGANES, ACCESSOIRES ET ENTRETIEN DES MACHINES. N° 468.869

Dispositif de raccord instantané pour fluides sous pression et application du dit raccord pour le graissage sous pression.

M. CAMILLE SENG résidant en France (Aube).

Demandé le 24 février 1914, à 11h 55m, à Paris.

Délivré le 5 mai 1914.—Publié le 18 juillet 1914.

La présente invention a pour objet un dispositif de raccord instantané pour fluides sous pression, lequel se caractérise essentiellement en ce que les deux parties de l'accouplement sont solidarisées ou séparées l'une de l'autre par le déplacement longitudinal, sur l'une des dites parties, d'une douille de manœuvre destinée à actionner des leviers, griffes ou autres organes d'assemblage; ces organes venant ou non en prise avec l'autre partie de l'accouplement qui posséde, dans ce but, un bourrelet d'engagement ou autre moyen équivalent. Plus particulièrement, le raccord peut être constitué par un corps possédant un chambrage à l'intérieur duquel peut être introduite l'autre partie de l'accouplement qui s'appuie sur une garniture élastique assurant l'étanchéité du joint. La liaison s'opère au moyen de griffes qui font saillie dans le chambrage et qui sont articulées dans des fentes du raccord, les dites griffes étant prolongées au-delà de leur articulation par des bras rainurés qui pénètrent dans des fentes de la douille de manœuvre et sont entraînées par cette dernière au moyen d'axes pénétrant dans les rainures des dits bras.

Ce système de raccord instantané trouve plus particulièrement son application dans le cas où il s'agit de réaliser un graissage sous pression au moyen d'huile, de graisse consistante, etc. Dans se cas, le raccord, qui est réuni au tuyau du mécanisme de refoulement: pompe ou autre, peut être fixé à volonté, par la manœuvre de la douille entraînant les griffes, sur le bourrelet d'agrafage dont le graisseur doit être muni dans ce but. Ce bourrelet peut être formé sur un chapeau qui ferme le graisseur et qui comporte une ouverture constituant un siège pour un obturateur soumis à l'action d'un ressort intérieur.

Sur les dessins annexés et à titre d'exemple:

La fig. 1 représente, partie en élévation, partie en coupe verticale, une forme de réalisation du dispositif de raccord instantané faisant l'objet de l'invention.

La fig. 2 en est une coupe correspondante en plan.

Les fig. 3 et 4 montrent respectivement en coupe verticale suivant XY et en plan une forme de réalisation d'un graisseur à bille, qui a été plus particulièrement étudié pour se combiner avec le dispositif de raccord instantané, dans le cas de graissage sous pression.

Le dispositif de raccord instantané se compose de deux parties principales: d'une part, un corps *a*, d'autre part une douille de manœuvre *b* susceptible de coulisser sur le corps *a*.

La corps *a*, qui constitue une sorte de cuvette destinée à recevoir l'organe sur lequel le

487

raccord doit être fixé, porte dans le rebord définissant la dite cuvette un certain nombre de fentes recevant respectivement des leviers c^1, c^2, c^3 formant griffes. Ces leviers c^1, c^2, c^3 sont articulés sur le corps *a*, au moyen d'un fil *f* se logeant dans une gorge convenablement disposée à cet effet. Les leviers X^1 pénètrent également dans des fentes correspondantes ménagées dans la douille *b*, qui peut être déplacée longitudinalement par rapport au corps *a*. Chaque levier est pourvu d'un bec d'accrochage faisant saillie dans la cuvette du corps *a* et constitue, par son autre bras, une fourche de manœuvre. Les fourches de manœuvre sont solidarisées par un fil *e* disposé dans une gorge de la douille déplaçable *b*. Cette dernière porte également, dans une gorge, un autre fil *g* qui peut venir, lors de ses déplacements dans un sens ou dans l'autre, s'engager dans des rainures *k* ménagées sur le corps *a*, ce qui l'immobilise dans les positions extrêmes qu'elle peut ainsi occuper. Un fil *h* sert en outre de butée.

Un anneau de caoutchouc *i* est disposé au fond de la cuvette et sert d'appui à l'organe à accoupler G, les griffes c^1, c^2, c^3 agissant pour l'appliquer sur le dit anneau *i* qui se comprime et forme ainsi joint étanche.

On voit que dans la position (fig. 1), la douille *b* étant repoussée sur le corps *a* et vers l'organe à accoupler G, les griffes c^1, c^2, c^3 font saillie à l'intérieur du corps *a* et, prenant appui sur le bourrelet *d* de l'autre partie de l'accouplement G, l'appliquent sur l'anneau interne de caoutchouc *i*. On remarque que toute traction opérée sur le corps *a* ne peut en aucun cas provoquer le désaccouplement.

Au contraire, en attirant la douille *b*, le fil *e* appartenant à cette dernière bascule les leviers c^1, c^2, c^3 et permet le dégagement de l'organe G précédemment accouplé ; la douille *b* étant immobilisée en cette position par l'engagement du fil *g* dans la gorge correspondante *k*.

Ce dispositif de raccord instantané, qui peut être utilisé pour assurer la jonction de deux canalisations où circule tout fluide et, en particulier, tout fluide sous pression, peut être particulièrement utilisé quand il s'agit de réaliser un graissage sous pression par de l'huile ou de la graisse consistante. Dans ce but, on peut avoir recours à un dispositif de graisseur à bille formant obturateur et comportant un bourrelet extérieur pour l'accrochage et la fixation du raccord (fig. 1 et 2).

Comme on le voit en fig. 3, 4, ce graisseur est constitué par un corps chambré A, percé d'un canal D formant conduit pour le lubrifiant. Un prolongement fileté permet la mise en place du graisseur. Dans le chambrage, qui est fileté intérieurement, se visse un bouchon B portant le bourrelet sur lequel se fixent les griffes c^1, c^2, c^3 du raccord (fig. 1, 2), pour réaliser l'accouplement avec la pompe destinée à refouler le lubrifiant. Dans l'exemple représenté, le bouchon B est, en outre, évidé intérieurement pour recevoir une bille *c*, qu'un ressort interne R pousse constamment pour assurer la fermeture du graisseur.

RÉSUMÉ.

1° Raccord instantané, caractérisé en ce que les deux parties de l'accouplement sont solidarisée ou séparées l'une de l'autre par le simple déplacement longitudinal, sur l'une des dites parties, d'une douille de manœuvre ; cette dernière déterminant la manœuvre de leviers, griffes ou autres organes de fixation qui appartiennent à la partie correspondante de l'accouplement et qui font ainsi saillie ou non à l'intérieur de cette dernière, pour assujettir ou libérer l'autre partie qui y est engagée.

2° Forme de réalisation du raccord instantané spécifié en 1°, caractérisé en ce que dans des fentes d'un corps chambré comportant intérieurement un anneau de joint et d'étanchéité, sont disposés des leviers ou griffes articulés, se prolongeant par des bras en forme de fourche ; ces leviers étant déplacés de manière à ce que leur nez fasse ou non saillie dans le chambrage, pour prendre appui sur on libérer le bourrelet appartenant à l'autre partie de l'accouplement, lorsqu'on déplace longitudinalement une douille coulissante sur le corps ; cette douille présentant des fentes pour les leviers ou griffes et portant un dispositif d'entraînement pénétrant dans les bras rainurés de ces derniers.

3° Application du raccord spécifié en 1° ou 2°, plus particulièrement dans le cas de graissage sous pression, caractérisée en ce que le raccord qui dépend, par exemple, du tuyau

de refoulement d'une pompe, se fixe ou se sépare à volonté du graisseur qui comporte, dans ce but, un bourrelet ou autre moyen d'accrochage se conjuguant avec les griffes ou leviers de fixation; le bourrelet de fixation appartenant à un bouchon qui ferme le corps du graisseur et dont l'ouverture forme siège pour un obturateur; bille ou clapet, soumis à l'action d'un ressort interne.

CAMILLE SENG.

Par procuration:

Dupont et Elluin.

Pour la vente des fascicules, s'adresser à l'Imprimerie Nationale, 87, rue Vieille-du-Temple, Paris (3e).

687

(No Model.) 4 Sheets—Sheet 1.

A. G. HAY & M. McINTYRE.

LUBRICATOR.

No. 499,541. Patented June 13, 1893.

FIG. 1.

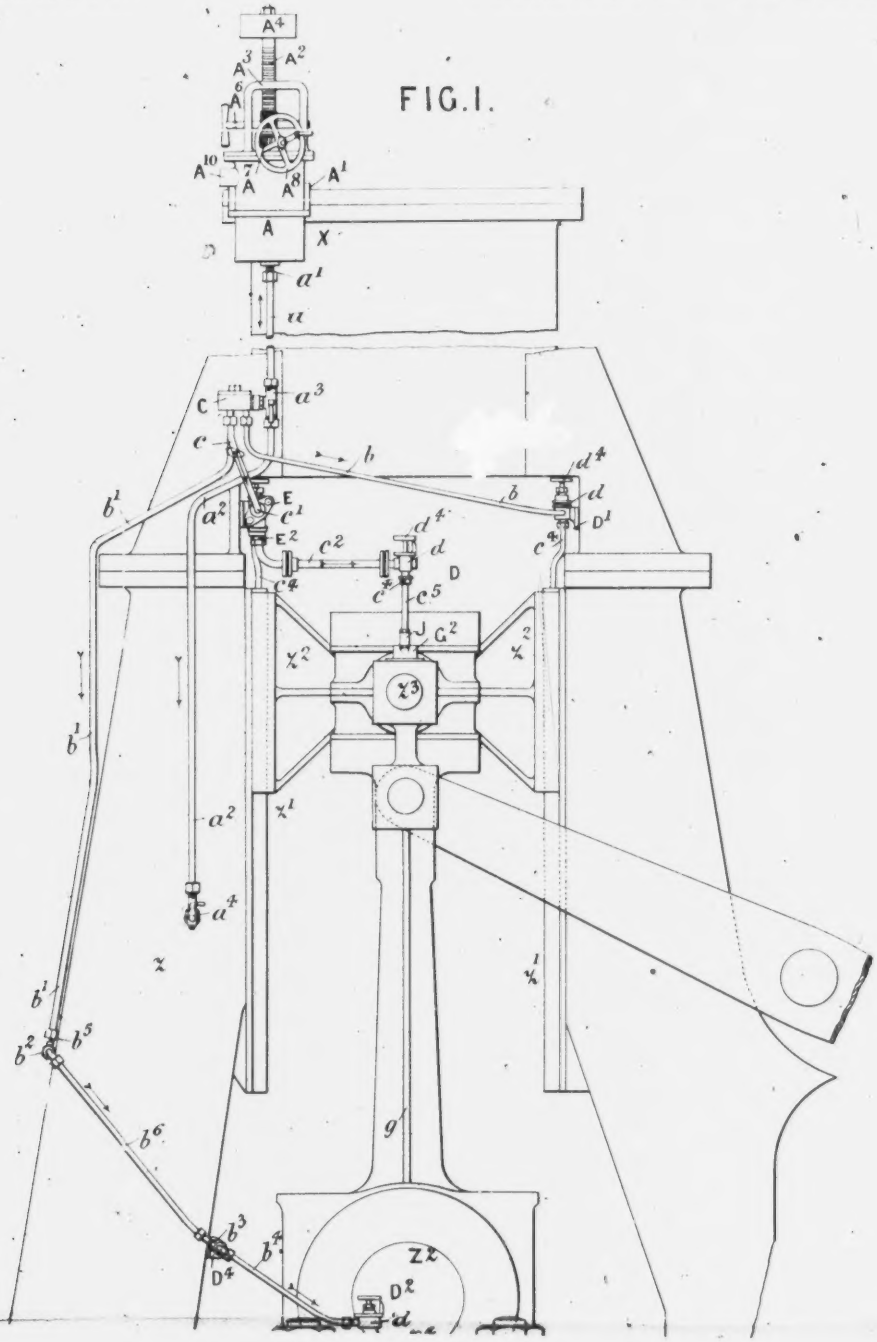

No. 499,641. Patented June 13, 1893.

FIG. 1.

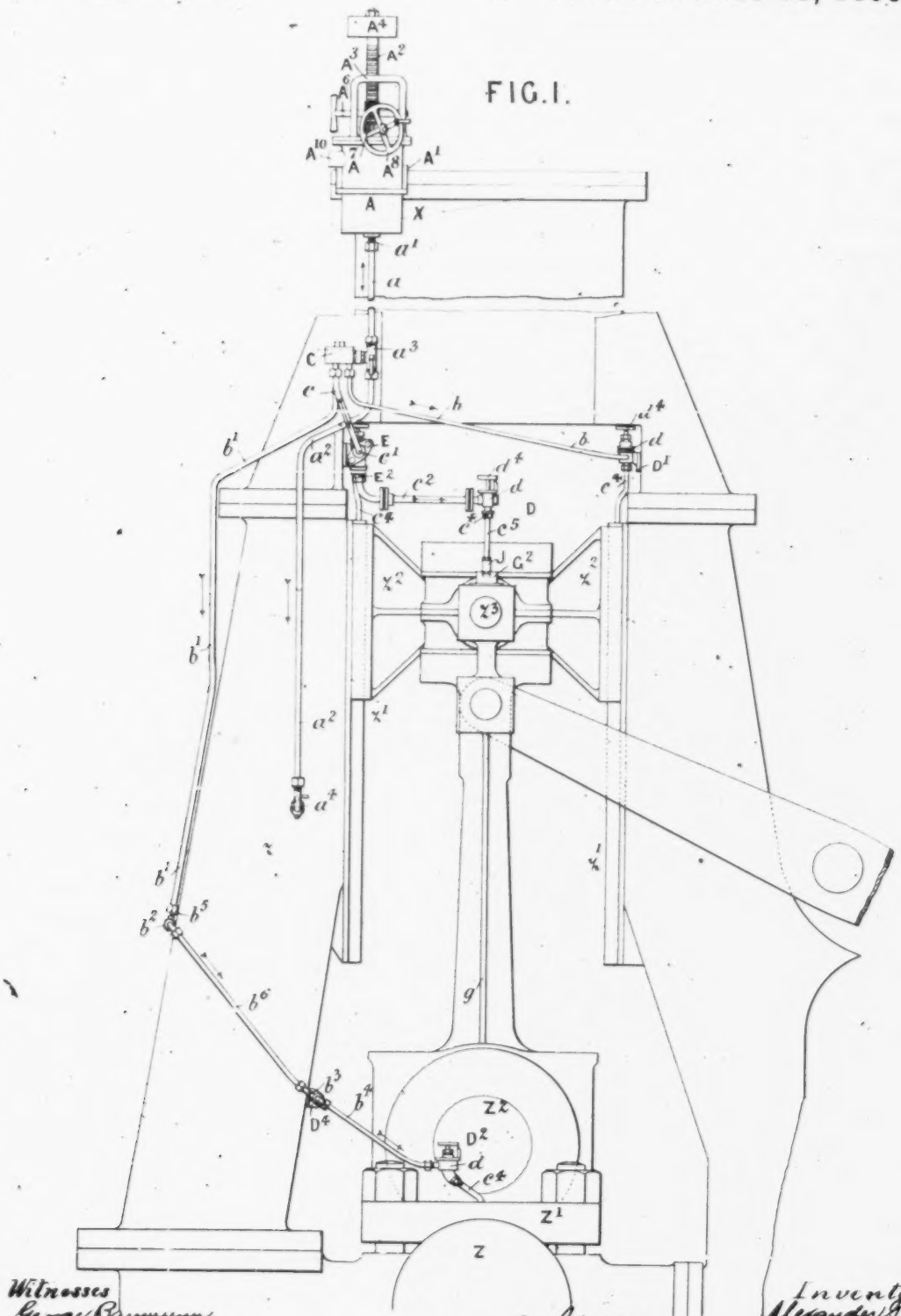

Witnesses
George Bannerman
John Revell

Inventors
Alexander G. Hay
Malcolm McIntyre

By their Attorneys
Howson and Howson

491

(No Model.) 4 Sheets—Sheet 2.

A. G. HAY & M. McINTYRE.

LUBRICATOR.

No. 499,541. Patented June 13, 1893.

FIG. 2.

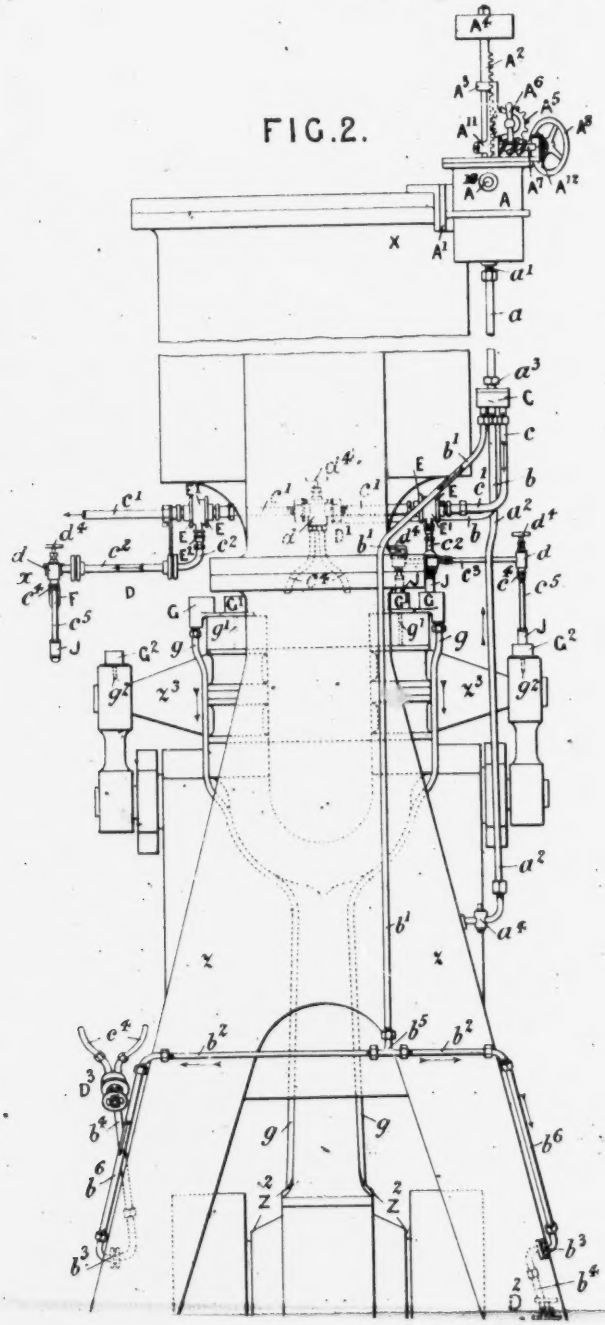

FIG. 2.

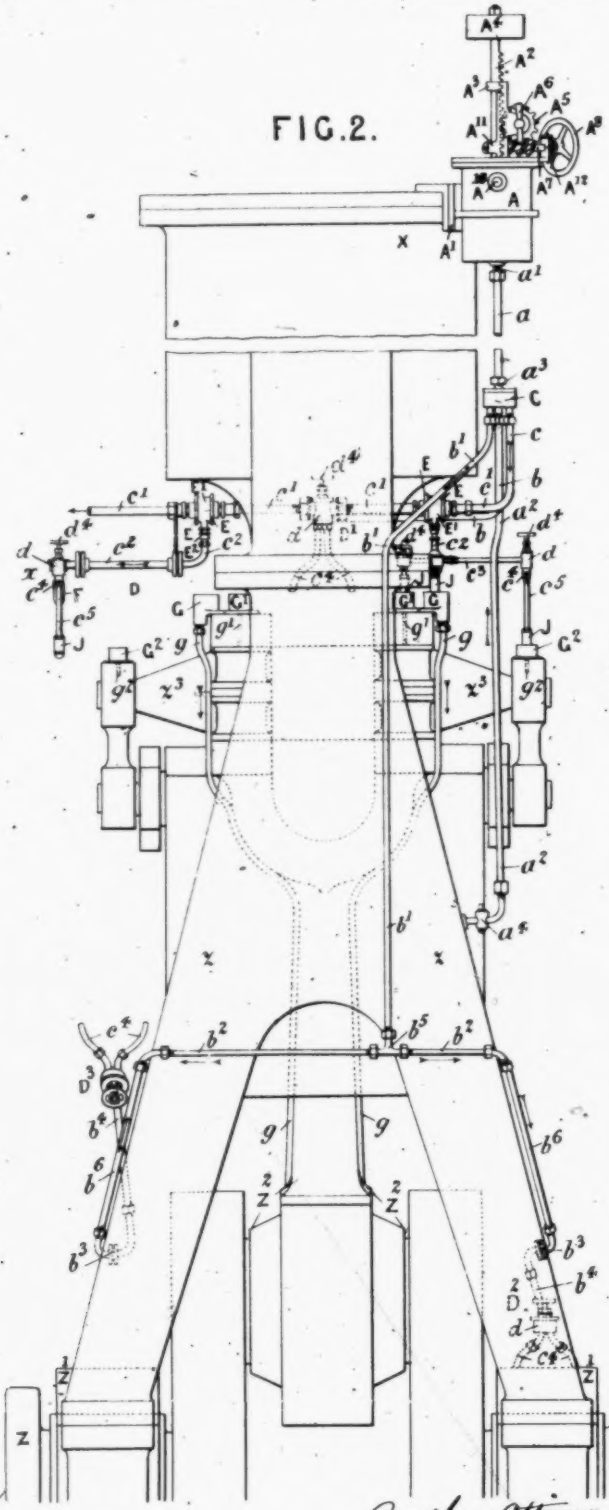

Witnesses
George Baumann
John Revell

Inventors
Alexander G. Hay
By their Attorneys, Malcolm McStyre
Howson and Howson

(No Model.) 4 Sheets—Sheet 3.

A. G. HAY & M. McINTYRE.

LUBRICATOR.

No. 499,541. Patented June 13, 1893.

FIG. 3.

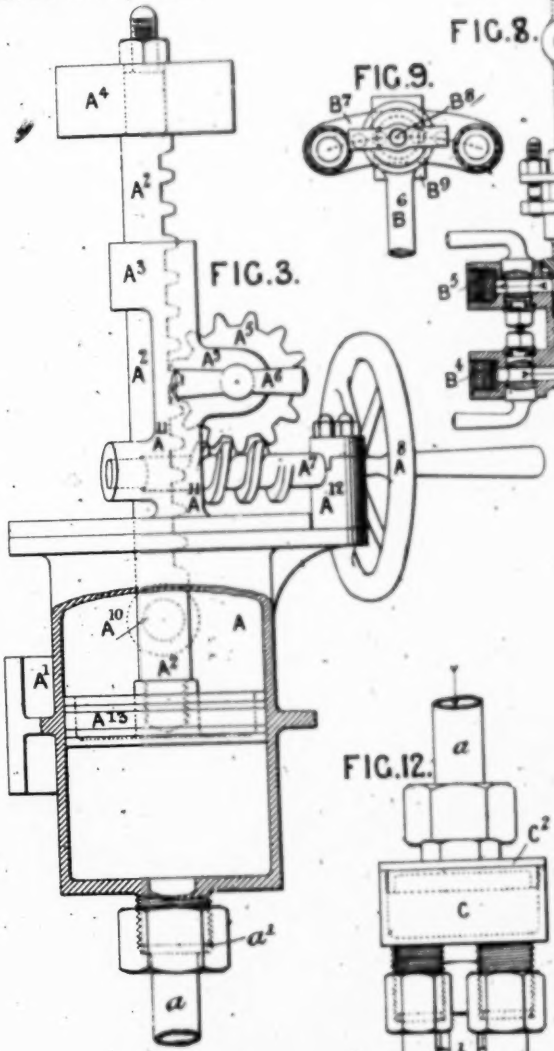

FIG. 8.

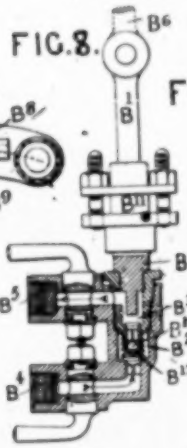

FIG. 9.

FIG. 6.

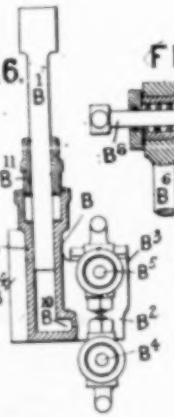

FIG. 10.

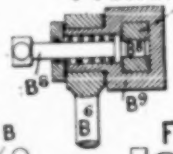

FIG. 7.

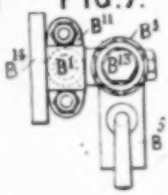

FIG. 11.

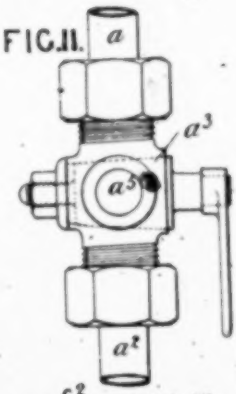

FIG. 12.

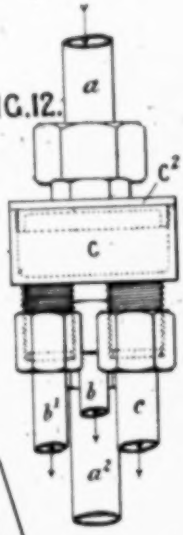

FIG. 13.

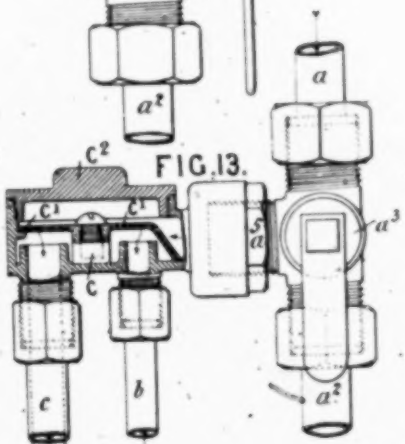

FIG. 4.

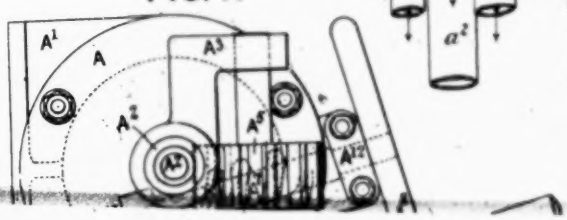

FIG. 5.

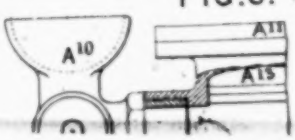

No. 499,541. Patented June 13, 1893.

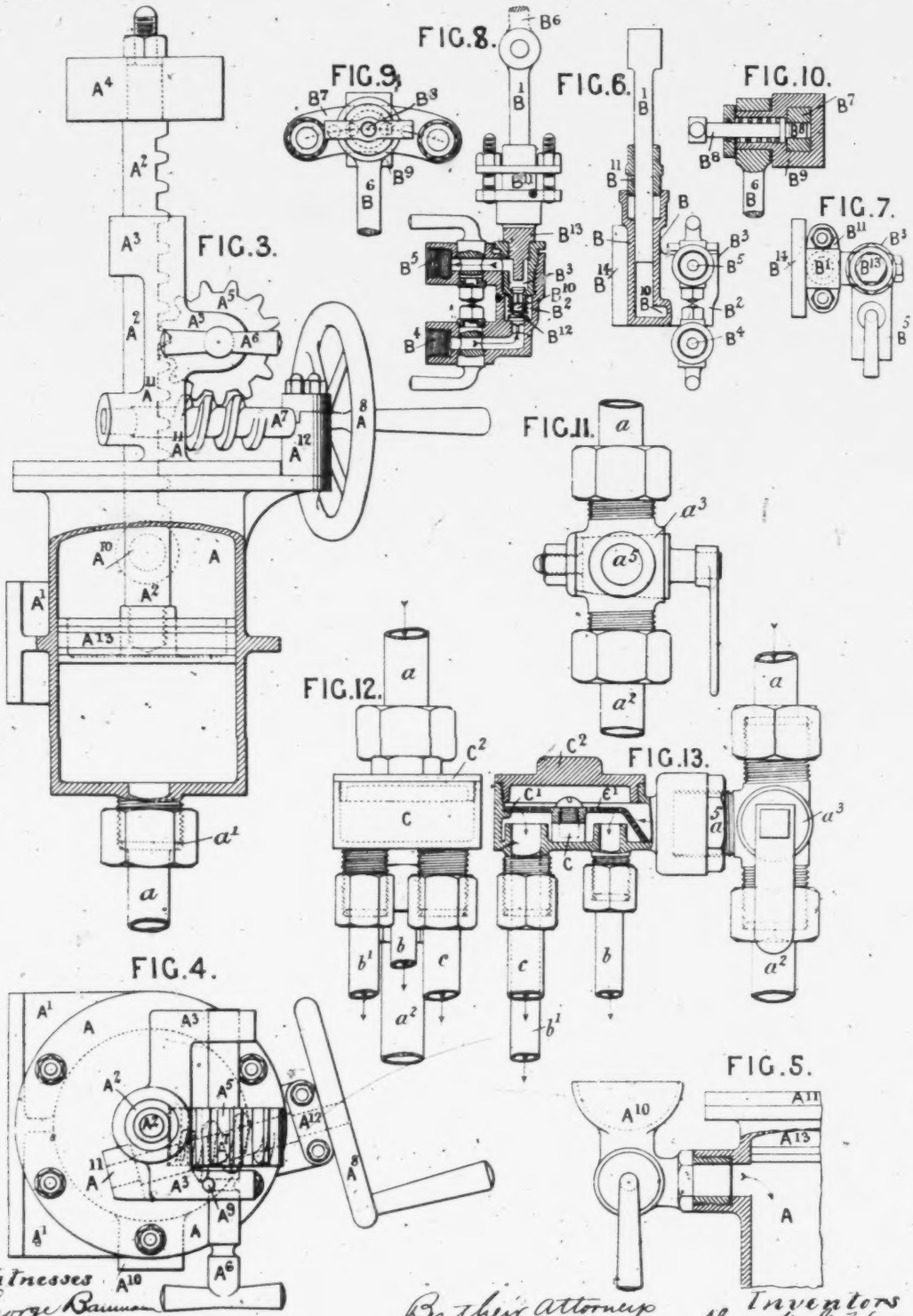

Witnesses
George Baumann
John Revell

By their Attorneys
Howson and Howson

Inventors
Alexander G. Hay
Malcolm McIntyre

(No Model.)

4 Sheets—Sheet 4.

A. G. HAY & M. McINTYRE.

LUBRICATOR.

No. 499,541. Patented June 13, 1893.

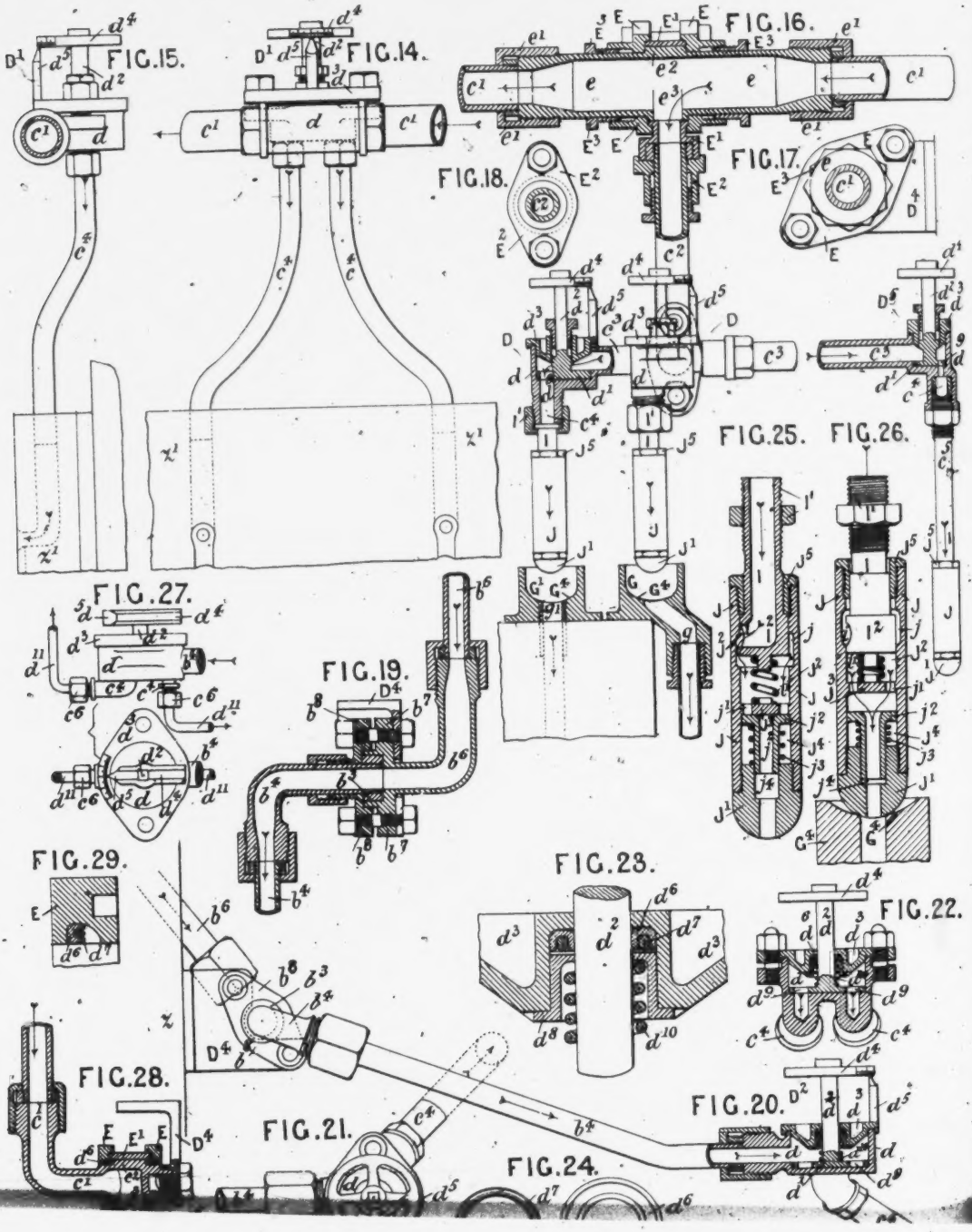

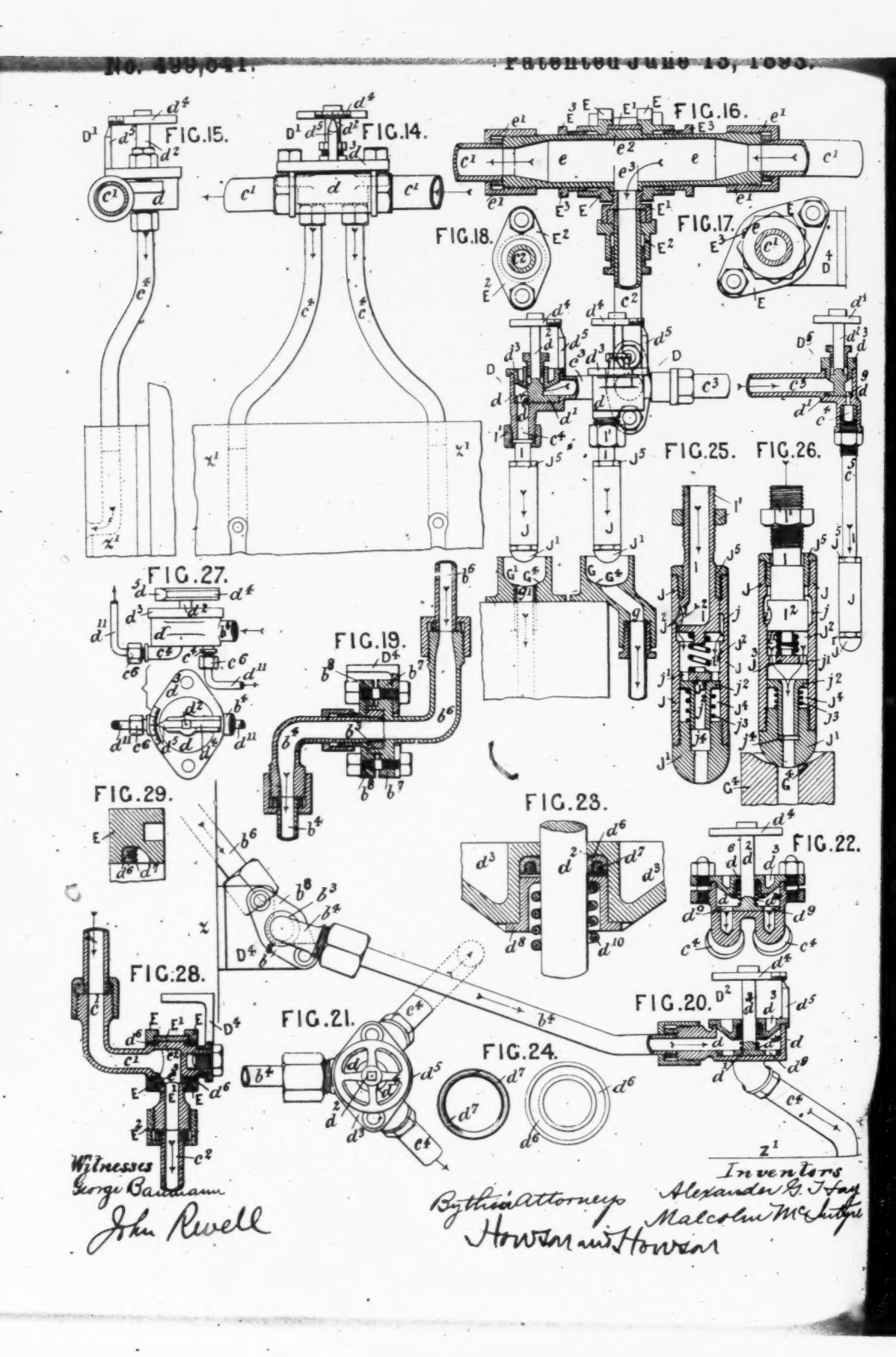

Witnesses
George Baumann
John Revell

Inventors
Alexander G. Tray
Malcolm McIntyre

By their attorneys
Howson and Howson

UNITED STATES PATENT OFFICE.

ALEXANDER G. HAY AND MALCOLM McINTYRE, OF GLASGOW, SCOTLAND.

LUBRICATOR.

SPECIFICATION forming part of Letters Patent No. 499,541, dated June 13, 1893.

Application filed January 13, 1891. Serial No. 377,585. (No model.) Patented in England October 2, 1890, No. 15,616.

To all whom it may concern:

Be it known that we, ALEXANDER GEBBIE HAY and MALCOLM MCINTYRE, engineers, subjects of the Queen of Great Britain and Ireland, residing in Glasgow, in the county of Lanark, Scotland, have invented Improved Mechanism for Lubricating the Working Parts of Engines and other Machinery, (for which we have obtained Letters Patent in Great Britain, No. 15,616, dated October 2, 1890,) of which the following is a specification.

Our invention has reference to appliances particularly adapted for automatically lubricating the cylinders, bearings and other working parts of marine engines, but also applicable for lubricating the working parts of other engines and machinery.

The improvements consist in automatically pumping or raising or forcing the lubricant through distributing pipes and fittings in a positive regulated manner in contradistinction to conveying the oil or other lubricants by combined gravitation and capillary wicks and dippers to the separate oil boxes and bearings as heretofore; and also in special improved constructions of the pumps and other fittings applicable for this improved system of lubricating.

In the accompanying drawings, Figure 1 is an end elevation; and Fig. 2 a corresponding side elevation of sufficient of the framing of an inverted cylinder marine steam engine and the main working parts and bearings to show one general arrangement of our new system and improved fittings as applied thereto for lubricating. Figs. 3 and 4 show a detailed sectional elevation and plan respectively of the supply and service piston cistern A; and Fig. 5 is a view of the filler and cock A^{10}. Figs. 6 and 7 show a detached side sectional matic oil serving syringe dipper. Figs. 27, 28 and 29 are detail views.

The cistern A is preferably secured and fitted by flanged brackets at A′, to the top of the cylinder X, as shown in Figs. 1 and 2; or it might be to any other high fixed part of the engine, or to the bulkhead above the working parts to be lubricated. This cistern raises the oil to itself and presses it therefrom through the first main pipe *a* coupled to its bottom branch at *a′*. As an alternative arrangement, an improved raising and forcing pump B shown in Figs. 6 and 7, and in corresponding section through the inlet and discharge valve box B^2, B^3, in Fig. 8, is fitted to some convenient part of the framing so as to be differentially reciprocated by the link B^7 and rod B^6 from any convenient moving part of the engine, the improved construction and action of which will be hereinafter referred to in reference to these figures.

The improvements further consist in a distributing service filter branch box C, and swiveling couplings *e* E′, and improved service disk valves *d d′* and automatic acting oil serving syringe dippers J. The pipes and fittings may be led down and along either the front or back frames or columns *z* of the engine.

The service piston barrel cistern A, shown in Figs. 1 to 5, consists of a bored cylindrical vessel A, with a working liquid-tight piston A^{13} which may be fitted with cup liquid tight leather rings or other equivalent. This piston is secured to a piston rod A^2 working up through the cylinder cover and guide bracket A″ A^5. A weight A^4 at the upper part of the piston rod A^2 tends to push the piston down and press out the oil from the vessel when

LUBRICATOR.

SPECIFICATION forming part of Letters Patent No. 499,541, dated June 13, 1893.

Application filed January 13, 1891. Serial No. 377,585. (No model.) Patented in England October 2, 1890, No. 15,616.

To all whom it may concern:

Be it known that we, ALEXANDER GEBBIE HAY and MALCOLM MCINTYRE, engineers, subjects of the Queen of Great Britain and Ireland, residing in Glasgow, in the county of Lanark, Scotland, have invented Improved Mechanism for Lubricating the Working Parts of Engines and other Machinery, (for which we have obtained Letters Patent in Great Britain, No. 15,616, dated October 2, 1890,) of which the following is a specification.

Our invention has reference to appliances particularly adapted for automatically lubricating the cylinders, bearings and other working parts of marine engines, but also applicable for lubricating the working parts of other engines and machinery.

The improvements consist in automatically pumping or raising or forcing the lubricant through distributing pipes and fittings in a positive regulated manner in contradistinction to conveying the oil or other lubricants by combined gravitation and capillary wicks and dippers to the separate oil boxes and bearings as heretofore; and also in special improved constructions of the pumps and other fittings applicable for this improved system of lubricating.

In the accompanying drawings, Figure 1 is an end elevation; and Fig. 2 a corresponding side elevation of sufficient of the framing of an inverted cylinder marine steam engine and the main working parts and bearings to show one general arrangement of our new system and improved fittings as applied thereto for lubricating. Figs. 3 and 4 show a detailed sectional elevation and plan respectively of the supply and service piston cistern A; and Fig. 5 is a view of the filler and cock A^{10}. Figs. 6 and 7 show a detached side sectional elevation and plan respectively; and Fig. 8 a corresponding section of a modified construction of service pump. Figs. 9, 10 and 11 are views of details of this pump. Figs. 12 and 13 show an end elevation and side section respectively of a distributing chest. Figs. 14 and 15 show side and edge views respectively of the supply disk cocks $d\,d'$. Fig. 16 shows an enlarged sectional elevation of the double swiveling or T-service branches e E'. Figs. 17 to 24 (inclusive) are detail views. Figs. 25 and 26 show sectional elevations of an automatic oil serving syringe dipper. Figs. 27, 28 and 29 are detail views.

The cistern A is preferably secured and fitted by flanged brackets at A', to the top of the cylinder X, as shown in Figs. 1 and 2; or it might be to any other high fixed part of the engine, or to the bulkhead above the working parts to be lubricated. This cistern raises the oil to itself and presses it therefrom through the first main pipe a coupled to its bottom branch at a'. As an alternative arrangement, an improved raising and forcing pump B shown in Figs. 6 and 7, and in corresponding section through the inlet and discharge valve box B^2, B^3, in Fig. 8, is fitted to some convenient part of the framing so as to be differentially reciprocated by the link B^7 and rod B^6 from any convenient moving part of the engine, the improved construction and action of which will be hereinafter referred to in reference to these figures.

The improvements further consist in a distributing service filter branch box C, and swiveling couplings e E', and improved service disk valves $d\,d'$ and automatic acting oil serving syringe dippers J. The pipes and fittings may be led down and along either the front or back frames or columns z of the engine.

The service piston barrel cistern A, shown in Figs. 1 to 5, consists of a bored cylindrical vessel A, with a working liquid-tight piston A^{13} which may be fitted with cup liquid tight leather rings or other equivalent. This piston is secured to a piston rod A^2 working up through the cylinder cover and guide bracket A'' A^3. A weight A^4 at the upper part of the piston rod A^2 tends to push the piston down and press out the oil from the vessel when filled and set in automatic working order. The lubricant is led in, and discharged through, the branch a' at the lower part of the vessel A, under the piston A^{13}. The piston is raised, to draw up oil to fill the vessel, by means of a toothed rack cut on the one side of the piston rod A^2, and a spur pinion A^5 gearing therewith, and carried on a hand spindle A^6 turning and sliding in bearings in the bracket A^3. This pinion A^5 is actuated by a worm on the spindle A^7 carried in bearings A^{11} A^{12}, on the said bracket A^3. The spindle A^7 is actuated by a hand crank wheel

A^8 on one end. The pinion A^5 is held in gear with the rack A^2 and actuating screw A^7 by a pin A^9 on the bracket A^3, taking into one of the grooves in the spindle A^6, see Fig. 4. When the cylinder A is filled and set to be discharged by the pressure of the piston A^{13}, and weight A^4, the pinion A^5 is pushed out of gear with the rack A^2. This is done by moving the spindle A^6 longitudinally in its bearings. It is held in this latter position by the pin A^9 entering another groove in the spindle A^6, which allows the piston rod A^2 and piston A^{13} to force the oil down through the discharge pipe a', a, to the improved service pipes, chambers, valves and fittings as hereinafter described.

Instead of the cistern A the pump B B′ may be employed. This pump is preferably of an improved single acting plunger form, arranged to work either vertically or horizontally from any suitable moving part of the engine. In the vertical arrangement of this pump shown in Figs. 6 to 8, the plunger B′ is a spindle of a small size as from half an inch to an inch, this maximum being large enough for most cases. The bored cylinder or pump B is fitted with a deep gland stuffing box B″ to guide the piston rod B′, the inner end of which is made to fit and work fluid tight in the cylinder. The valve box B^2 and the inlet and discharge branches B^4, B^5 are at one side of and cast in one with, the cylinder B with a bracket flange B^{14}, on one side for bolting the whole to any part of the engine or machinery framing. The inlet and discharge branches B^4 and B^5 are both provided with regulating cocks as seen in Fig. 8. The outer end of the plunger rod B′ is formed with a joint eye to be connected to and reciprocated by the free end of a connecting rod B^6 from any moving part of the engine. The other end of the rod B^6 is connected to the part B^9 which embraces, and is adapted to be shifted upon, a quadrant or segmental link B^7.

Figs. 9 and 10 are respectively front and cross sectional views of this part of the mechanism. The rod B^9 is adjustably connected to the quadrant B^7 by means of a spring pin B^8, entering one of the several holes in the quadrant so that the stroke of the pump may be varied to approximately draw and deliver any regulated quantity of the oil from any ordinary supply cistern placed either above or below the apparatus. When the plunger B′ is on its outward stroke the oil is drawn fitted in it an annular outlet valve chamber with a screw plug B^{13} in its upper end, to regulate the lift of the discharge valve B^3. This annular discharge valve plug B^{13} has an annular discharge chamber round it, with lateral recesses leading direct into the discharge branch B^5. A helical spring in the valve chest B^2 prevents the inlet valve opening too high. This arrangement of pump B may also be fitted to work horizontally, but in this case, the inlet and discharge valve boxes would be set at right angles to the cylinder B, that is, for the valves to work vertically. When the oil is supplied from a cistern above to the oil piston cylinder A, hereinbefore described, a filler and cock A^{10} (shown in Fig. 5), might be employed to fill the cylinder A, below the piston A^{13}.

In the arrangement shown in Figs. 1 and 2, the service cylinder A draws its oil before described through the pipe a^2 to the pipe a from one of the hollow columns z of the engine frame. In this case the column z is made an oil vessel fitted with a stop cock at a^4, the oil passing through a three-way cock a^3 shown in Fig. 11. This cock is attached by its lateral branch a^5 to a service filtering chest C, shown in Figs. 12 and 13. When the cock is turned at right angles it shuts off the connection between the pipe a and the pipe a^2 and opens that between the pipe a and the distributing service filter box C to supply the oil to the several service pipes c, b, b'. This vessel is provided with a perforated partition C′ and is fitted with a removable screw cover C^2 for cleaning, as seen particularly in Fig. 13. The several service pipes c, b, b' lead to the new or improved lubricating fittings of the different moving and working parts of the engine as will hereinafter be described. The pipe c conducts the oil to the fixed horizontal common service pipe c' secured over the top of the column z. This pipe leads the oil to the cocks d d', shown at D′, in Figs. 1, 2, 14 and 15, which regulate and supply the oil to the working surfaces of the guides z' on the column frames and the slides z^2 of the cross head z^3. The pipe b from the service filter box C supplies the opposite slides and guides z', z^2. Each chest d is fitted with one or more branches c^4 to lead the oil to different points. The boxes d have a disk valve d' shown in Figs. 16, 20 and 22 with holes d^2 corresponding in size and number to the branches c^4, Figs. 16 and 20 to 24 inclusive. The di[illegible] d' is actuated by a spindle d^3 and

and weight A^5, the pinion A^6 is pushed out of gear with the rack A^7. This is done by moving the spindle A^6 longitudinally in its bearings. It is held in this latter position by the pin A^9 entering another groove in the spindle A^6, which allows the piston rod A^2 and piston A^{13} to force the oil down through the discharge pipe a', a, to the improved service pipes, chambers, valves and fittings as hereinafter described.

Instead of the cistern A the pump B B′ may be employed. This pump is preferably of an improved single acting plunger form, arranged to work either vertically or horizontally from any suitable moving part of the engine. In the vertical arrangement of this pump shown in Figs. 6 to 8, the plunger B′ is a spindle of a small size as from half an inch to an inch, this maximum being large enough for most cases. The bored cylinder or pump B is fitted with a deep gland stuffing box B″ to guide the piston rod B′, the inner end of which is made to fit and work fluid tight in the cylinder. The valve box B^2 and the inlet and discharge branches B^4, B^5 are at one side of and cast in one with, the cylinder B with a bracket flange B^{14}, on one side for bolting the whole to any part of the engine or machinery framing. The inlet and discharge branches B^4 and B^5 are both provided with regulating cocks as seen in Fig. 8. The outer end of the plunger rod B′ is formed with a joint eye to be connected to and reciprocated by the free end of a connecting rod B^6 from any moving part of the engine. The other end of the rod B^6 is connected to the part B^9 which embraces, and is adapted to be shifted upon, a quadrant or segmental link B^7.

Figs. 9 and 10 are respectively front and cross sectional views of this part of the mechanism. The rod B^6 is adjustably connected to the quadrant B^7 by means of a spring pin B^8, entering one of the several holes in the quadrant so that the stroke of the pump may be varied to approximately draw and deliver any regulated quantity of the oil from any ordinary supply cistern placed either above or below the apparatus. When the plunger B′ is on its outward stroke the oil is drawn through the inlet branch B^4 and valve B^{12}, into the inlet valve chest B^3, then through a branch B^{10}, which connects the valve chest to the lower end of the cylinder B. When the plunger B′ is on its inward stroke it forces the oil out through the same valve chamber B^3 and up through a discharge valve B^3, fitted above the inlet valve B^{12} in the same chamber, and out through the discharge branch B^5, as indicated by the arrows in Fig. 8 to the service pipe a. The upper end of the valve box B^3 is bored and chased, so as to have branch B^5. A helical spring in the chest B^3 prevents the inlet valve opening too high. This arrangement of pump B may also be fitted to work horizontally, but in this case, the inlet and discharge valve boxes would be set at right angles to the cylinder B, that is, for the valves to work vertically. When the oil is supplied from a cistern above to the oil piston cylinder A, hereinbefore described, a filler and cock A^{10} (shown in Fig. 5), might be employed to fill the cylinder A, below the piston A^{13}.

In the arrangement shown in Figs. 1 and 2, the service cylinder A draws its oil before described through the pipe a^2 to the pipe a from one of the hollow columns z of the engine frame. In this case the column z is made an oil vessel fitted with a stop cock at a^4, the oil passing through a three-way cock a^3 shown in Fig. 11. This cock is attached by its lateral branch a^5 to a service filtering chest C, shown in Figs. 12 and 13. When the cock is turned at right angles it shuts off the connection between the pipe a and the pipe a^2 and opens that between the pipe a and the distributing service filter box C to supply the oil to the several service pipes c, b, b'. This vessel is provided with a perforated partition C′ and is fitted with a removable screw cover C^3 for cleaning, as seen particularly in Fig. 13. The several service pipes c, b, b' lead to the new or improved lubricating fittings of the different moving and working parts of the engine as will hereinafter be described. The pipe c conducts the oil to the fixed horizontal common service pipe c' secured over the top of the column z. This pipe leads the oil to the cocks d d', shown at D′, in Figs. 1, 2, 14 and 15, which regulate and supply the oil to the working surfaces of the guides z' on the column frames and the slides z^2 of the cross head z^3. The pipe b from the service filter box C supplies the opposite slides and guides z', z^2. Each chest d is fitted with one or more branches c^4 to lead the oil to different points. The boxes d have a disk valve d' shown in Figs. 16, 20 and 22 with holes d^9 corresponding in size and number to the branches c^4, Figs. 16 and 20 to 24 inclusive. The disk valve d' is actuated by a spindle d^2 and works on a turned face in the bottom of the chest d, over the branches c^4. The spindle d^2 passes out through a liquid-tight cover d^3 fitted with a cup leather d^5 and expanding split metal ring d^7 and bush d^8 with helical spring at d^6 as shown in the sectional views Figs. 20 to 23. This arrangement of the cover dispenses with stuffing box packing on the spindle d^2, the cup ring d^5 being expanded to grip the rod and the recess in the cover of the joint by the spring ring d^7. The spindle d^2 is turned

by a hand wheel d^4 which is provided with divisions, and a fixed index pointer d^5 projecting up from the cover d^3 shows the position of the disk valve d'. Thus the supply of oil to the service branches c^4 may be regulated. The common supply tube c' also supplies oil through two of the double swiveling or T-branches e E′ fitted thereon, as shown in enlarged sectional view in Fig. 16. From the branches e E′, the oil passes by the tubes c^2 c^3 to the intermittent automatic syringe dippers J (Figs. 25 and 26) carried on these swiveling branches and tubes, over the oil cups at G, G′, G². By means of the swiveling joints e, E′, these dippers J can be adjusted. From the oil cups G G′ the oil is led by the tubes g from the cups G to the crank or crank pin at the lower end of the connecting rod at Z^2 by the tubes g' to the upper journals at G′ of the cross-head z^3, and by the tubes g^2 to the outer journals at G² of the cross-head, see Fig. 2.

Referring to Figs. 1 and 2, and 16 to 18 the swiveling T-branch e, E′ consists of a central branch pipe e secured by turned and screwed couplings e' at its outer ends to the ends of the service pipe c' and in line therewith. The pipe e has a turned boss e^2, in the center where the lateral branch e^3 is formed, and fitted over this turned boss is the hollow branch E′. This branch is embraced liquid-tight by the flanged bosses E E, of two stuffing boxes E^3 mounted on the boss e^2 of the branch e e. These stuffing boxes are bolted together by bolts as shown in the end view Fig. 17. Thus the branch pipes E′ and c^2 can swivel at right angles, liquid-tight on the central boss e^2 of the branch e, so as to raise the branch pipes c^2 and automatic lubricators J out of the way of their oil cups G, G′. By these means the covers of the bearings or working parts can be got at without disturbing the main service pipes c'.

A swiveling joint is made at E′ by fitting on the end of the branch pipe c^2 a stuffing gland E^2 with flanges to be bolted to the branch E′, shown in end view in Fig. 18. This enables the branch pipe c^2, with the automatic lubricators J and the branch pipe c^3 to be swiveled at right angles to the former joint e, E′, to take these lubricators laterally away from their receiving oil cups G, G′, G², as shown turned out in this position at x on the left hand side of Fig. 2.

Each bearing to be lubricated and its oil cup G has its service pipe and branch c^4 fitted with a regulating valve case d as indi-

Fig. 19 shows a sectional elevation detached of one of these swiveling joints b^3 to a large scale, formed of two glands b^7, b^8 screwed together to form an internal swivel joint b^3. The bracket D^4 is for securing the joint to a fixed part of the engine.

A further improvement of our system consists of an automatic oil dipper J shown in sectional elevation with the moving parts in their normal and discharging positions respectively in Figs. 25 and 26. These dippers J are attached by screw stems I, I′ with jam nuts, to the lower ends of the oil serving tubes c^4, c^5 leading to the reciprocating parts of the engine. Such reciprocating parts of the engine are provided with an oil cup or a concave part G^4, which, as the part rises, presses against the lower nozzle end J′ of the syringe. This syringe is formed of a hollow cylinder J, bored at its upper end J^2 to fit a hollow piston I^2 formed on the lower inner end of the screw tube I, which is passed in through a screw stuffing cover J^5. A lateral orifice i in the center of the piston part I^2 opens into an annular wide part j in the bored cylinder J^2. A perforated division J^3 is formed in the center of the hollow cylinder J, with a strong helical spring i' fitted between it and the lower end of the piston I^2, so as to press this division J^3 and the cylinder J down from the piston I^2 until the cover J^5 stops against the upper end of the piston I^2, as shown in Fig. 25. In this position the oil passes from the tube I into the lower bored part J^2 of the cylinder J as indicated by the arrows in this figure. The hollow stem of the disk valve j^2 has a light helical spring j^3 fitted over it, resting on the lower screw plug J′ in a bored part j^4 of which the lower stem of the valve j^2 works. This spring pressing the disk j^2 against the division J^3 closes the perforations j' when the cylinder J is pressed down by the spring i', as shown in Fig. 25. But when a lubricating cup comes up and strikes the lower end J′ of this lubricating cylinder J, as shown at G^4 in Fig. 26, the spring i' is compressed and the oil is forced out of the chamber J^2 through the perforations j' and out through the hollow stem of the valve j^2, and lower end J′ of the syringe, the pressure of the oil acting on the valve j^2 opening it by compressing the light spring j^3 as shown and indicated by the arrows in Fig. 26.

Fig. 27 shows an elevation and plan of one of the disk valve boxes d, more particularly described in reference to and shown in Figs. 14 to 18 and 20 and 21. This Fig. 27 shows

the intermittent automatic syringe dippers J (Figs. 25 and 26) carried on these swiveling branches and tubes, over the oil cups at G, G', G². By means of the swiveling joints *e*, E', these dippers J can be adjusted. From the oil cups G G' the oil is led by the tubes *g* from the cups G to the crank or crank pin at the lower end of the connecting rod at Z² by the tubes *g'* to the upper journals at G' of the cross-head z^3, and by the tubes g^2 to the outer journals at G² of the cross-head, see Fig. 2.

Referring to Figs. 1 and 2, and 16 to 18 the swiveling T-branch *e*, E' consists of a central branch pipe *e* secured by turned and screwed couplings *e'* at its outer ends to the ends of the service pipe *c'* and in line therewith. The pipe *e* has a turned boss e^2, in the center where the lateral branch e^3 is formed, and fitted over this turned boss is the hollow branch E'. This branch is embraced liquid-tight by the flanged bosses E E, of two stuffing boxes E^3 mounted on the boss e^2 of the branch *e e*. These stuffing boxes are bolted together by bolts as shown in the end view Fig. 17. Thus the branch pipes E' and c^2 can swivel at right angles, liquid-tight on the central boss e^2 of the branch *e*, so as to raise the branch pipes c^2 and automatic lubricators J out of the way of their oil cups G, G'. By these means the covers of the bearings or working parts can be got at without disturbing the main service pipes *c'*.

A swiveling joint is made at E' by fitting on the end of the branch pipe c^2 a stuffing gland E^2 with flanges to be bolted to the branch E', shown in end view in Fig. 18. This enables the branch pipe c^2, with the automatic lubricators J and the branch pipe c^3 to be swiveled at right angles to the former joint *e*, E', to take these lubricators laterally away from their receiving oil cups G, G', G², as shown turned out in this position at *x* on the left hand side of Fig. 2.

Each bearing to be lubricated and its oil cup G has its service pipe and branch c^4 fitted with a regulating valve case *d* as indicated at D. A separate branch c^3 is led from the branch c^2 with a regulating valve at D^5 to carry the service tube c^5 and lubricator J, to deliver the oil into the receiving cup G^2 of the outer ends of the cross-heads z^3 as shown on the right of Figs. 2 and 16. The pipe *b'* leading from the chest C (Fig. 2) is connected to the cross pipe b^2 by a swiveling T coupling as at b^5, and angle branches are connected to the pipe b^2 by single swiveling joints as at b^3.

spectively in Figs. 25 and 26. These dippers J are attached by screw stems I, I' with jam nuts, to the lower ends of the oil serving tubes c^4, c^5 leading to the reciprocating parts of the engine. Such reciprocating parts of the engine are provided with an oil cup or a concave part G^4, which, as the part rises, presses against the lower nozzle end J' of the syringe. This syringe is formed of a hollow cylinder J, bored at its upper end J^2 to fit a hollow piston I^2 formed on the lower inner end of the screw tube I, which is passed in through a screw stuffing cover J^5. A lateral orifice *i* in the center of the piston part I^2 opens into an annular wide part *j* in the bored cylinder J^2. A perforated division J^3 is formed in the center of the hollow cylinder J, with a strong helical spring *i'* fitted between it and the lower end of the piston I^2, so as to press this division J^3 and the cylinder J down from the piston I^2 until the cover J^5 stops against the upper end of the piston I^2, as shown in Fig. 25. In this position the oil passes from the tube I into the lower bored part J^2 of the cylinder J as indicated by the arrows in this figure. The hollow stem of the disk valve j^2 has a light helical spring j^3 fitted over it, resting on the lower screw plug J' in a bored part j^4 of which the lower stem of the valve j^2 works. This spring pressing the disk j^2 against the division J^3 closes the perforations *j'* when the cylinder J is pressed down by the spring *i'*, as shown in Fig 25. But when a lubricating cup comes up and strikes the lower end J' of this lubricating cylinder J, as shown at G^4 in Fig. 26, the spring *i'* is compressed and the oil is forced out of the chamber J^2 through the perforations *j'* and out through the hollow stem of the valve j^2, and lower end J' of the syringe, the pressure of the oil acting on the valve j^2 opening it by compressing the light spring j^3 as shown and indicated by the arrows in Fig. 26.

Fig. 27 shows an elevation and plan of one of the disk valve boxes *d*, more particularly described in reference to and shown in Figs. 14 to 18 and 20 and 21. This Fig. 27 shows the outlet branches c^4 leading to the feed pipes d^{11} from the boxes *d*. The swivel jointed couplings c^6 allow these feed branches d^{11} to swivel either vertically or horizontally to or out of the way of the bearings to be lubricated. Fig. 27 also shows a pointer d^5 on the cross handle d^4 on the top of the spindle d^2 of the valve, instead of a stile pointer d^3 as described in reference to the former figures. This pointer is fitted nearly close down to the cover d^3

of the valve chest d, so that the divided index is cut on the corner opposite the cross hand pointer d^5 instead of on the hand-wheel d^4 of the former arrangements opposite the stile pointer d^5.

Fig. 28 shows a sectional elevation of a single swiveling joint e^1, E′, for fitting on the ends of the oil service pipes c' (where the tube c^2 leading to the bearings to be lubricated has to be raised out of the way, when the bearings have to be tightened up), equivalent to, and as a substitute for, the swiveling tube joint shown in Figs. 16 and 19. In this arrangement the fixed central hollow boss e^2 on the end of the tube c' has a small hole e^3 in it, leading to the service tube c^2, so that the oscillating eye E′ on this boss to which the service tube c^2 is coupled at E^2, in being lifted or turned up, shuts off the passage e^3 of the oil to the service tube c^2 and prevents leakage or waste. The fixed boss e^2 has a solid end projecting through one of its gripping flanges E to which the bracket D^4 is screwed for securing the supply pipe c' and boss e^2 to the columns x or any fixed part of the framing; otherwise it is constructed substantially as shown in the said other Figs. 16 and 19. But to insure tightness of the swiveling flanges E E, of these couplings, their inner eyes where they swivel on the boss e^2 and tubes are shown as formed with grooves for the insertion of small cup leather rings d^8 and internal spring metal rings d^7 for making these working parts E on these tubes liquid tight, the same as the rings shown in Figs. 23 and 24 to a larger scale. And these cup leather rings d^8 may be applied to the swiveling joint flanges E of any of these couplings as indicated to a large scale in section in Fig. 29.

We claim as our invention—

1. In a system for automatically lubricating the working parts of machinery, the combination of a weighted service cistern distributing filter boxes connected therewith, with feed and oscillating service pipes leading from the filter boxes and having swiveling joints and intermittent feed syringe dippers operated by the oil box of the part to be lubricated and shutting off and regulating valves, all substantially as described.

2. In a system for automatically lubricating the working parts of machinery, the combination of a supply cistern, distributing filter boxes connected therewith, with feed pipes leading from the filter boxes and provided with valves d d' having spindles and indicating fittings, the said feed pipes being also provided with swivel jointed pipes, shutting off cocks and devices operated by the moving parts of the engine for feeding the oil thereto, all substantially as set forth.

3. In a system for automatically lubricating the working parts of machinery, the combination of an oil service cistern, filter box connected with the cistern and main service pipes leading from the filter box, with local service pipes, and single and double swiveling joint couplings between the main and the local service pipes, substantially as set forth.

4. In a system for automatically lubricating the crank pins, cross-heads, lever links, and other like moving parts of engines, and other machinery, the combination of an oil service cistern, filter box connected therewith and main service pipes leading from the filter box, with local service pipes, each provided with automatic feed oil forcing syringe dipper having a moving oil box adapted to be operated by the moving oil box of the part to be lubricated, substantially as set forth.

5. In a system for automatically lubricating the crank pins, cross-heads, lever links, and other like moving parts of engines and other machinery, the combination of an oil service cistern, filter box connected therewith and main service pipes leading from the filter box, with local service pipes each provided with moving syringe cylinder J the said cylinder being provided with a perforated division J^5, a hollow piston I^3, lateral orifice i, helical springs i' i^3 and disk valves i^2, substantially as and for the purposes set forth.

In testimony whereof we have signed our names to this specification in the presence of two subscribing witnesses.

ALEXANDER G. HAY.
MALCOLM McINTYRE.

Witnesses:
W. R. M. THOMSON,
JOHN SIME,
Both of 96 *Buchanan Street, Glasgow.*

498

A. J. CROTTY.

OIL CAP FOR VEHICLE WHEELS.

APPLICATION FILED SEPT. 5, 1917.

1,400,871. Patented Dec. 20, 1921.

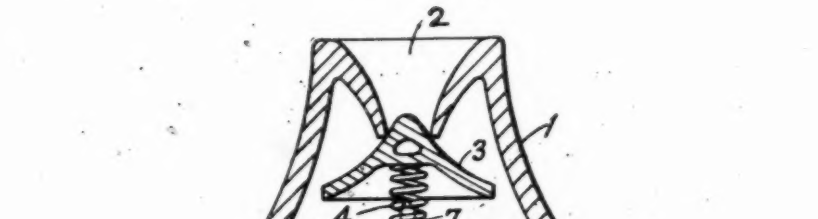

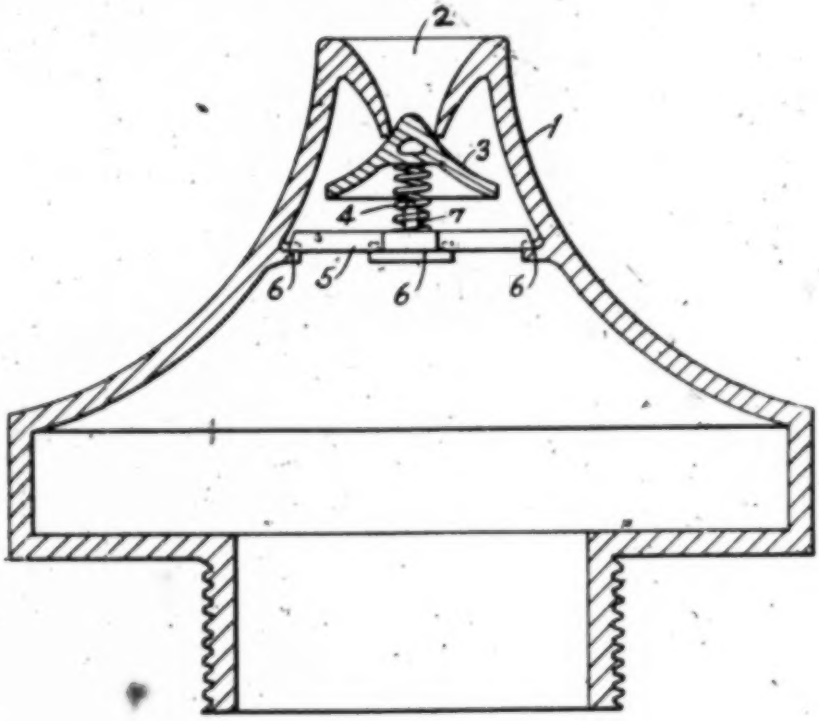

INVENTOR
Andrew Joseph Crotty
BY
Sewell & Son
HIS ATTORNEYS

UNITED STATES PATENT OFFICE.

ANDREW JOSEPH CROTTY, OF KNOCKLONG, IRELAND.

OIL-CAP FOR VEHICLE-WHEELS.

1,400,871. Specification of Letters Patent. Patented Dec. 20, 1921.

Application filed September 5, 1917. Serial No. 189,865.

(GRANTED UNDER THE PROVISIONS OF THE ACT OF MARCH 3, 1921, 41 STAT. L., 1313.)

To all whom it may concern:

Be it known that I, ANDREW JOSEPH CROTTY, a subject of the King of Great Britain, residing at Ballylanders, Knocklong, county Limerick, Ireland, have invented certain new and useful Improvements in Oil-Caps for Vehicle-Wheels, of which the following is a specification.

To simplify the oiling of vehicle wheels I propose to transform the present existing cap into a cone with an inverted lip or flange inclining inward at the apex of this cone in which shall be an opening which shall have fitted into it a sliding valve which shall be a smaller cone, hollow internally without an opening at the apex and which shall be kept in position by a spiral coil or spring fitting into the hollow of this smaller cone and which coil or spring shall be itself kept in position by a piece of metal in the form of a cross the ends of which shall fit into four grooves, one opposite the other in the inner side of the outer cone. This cross-piece shall also have a short pivot in the center which pivot shall fit into the lower end of the spiral coil, and this cross-piece shall be detachable.

As shown in the accompanying drawing, said oil-cap consists of an outer cone 1 with an opening at the apex 2, as shown into which fits the inner cone 3 which latter is held in place and operated by the spiral coil or spring 4 which latter is in turn held in place by the cross-piece 5 fitting into grooves at 6 in lugs in the inner side of the outer cone 1, as shown. The pivot 7 fits into the center of the spiral coil or spring 4, as shown, thus securing said spring in position.

This cap can be oiled by means of an oil can introduced into the opening at the apex and by pressing on the inner cone which retracts and allows the oil to flow into the base of the cap, the conical shape of which accelerates this without removing the cap or changing the position of the wheel so that in this case time and oil are saved, for in the prior art when the cap is removed from the wheel and oil poured into the former, a certain amount of this oil is lost in the operation of replacing the cap.

Having described my invention, what I claim is:—

1. In an oil cap having a conical casing with an internal flange at the apex thereof, a valve comprising a conical body member having a recess in the base thereof, a cross piece secured in position in the conical casing, and a spring extending between the cross piece and the conical valve, with one end thereof entering the recess in the base of the conical valve to normally maintain the same in position against the valve seat formed at the extremity of the internal flange at the apex of the said conical casing.

2. In an oil cap having a conical casing with an internal flange at the apex thereof and spaced internal lugs on the walls thereof, a valve comprising a conical body member having a recess in the base thereof, a cross member seated on the internal lugs of the walls of the casing, a pin secured in the cross piece, and a spring extending between the said cross piece and the said valve member, one end of the spring surrounding the said pin and the other pin entering the said recess in the base of the valve member to center the said spring and normally maintain the valve member in position against the valve seat formed at the extremity of the said internal flange at the apex of the casing.

Signed by me this 15th day of June, 1917.

ANDREW JOSEPH CROTTY.

Witnesses:
GEO. B. DAWSON,
PATRICIA CAMPBELL.

500

June 19, 1923. 1,459,662

C. W. MANZEL

LUBRICATING SYSTEM.

Filed Aug. 18, 1920. 2 Sheets-Sheet 1

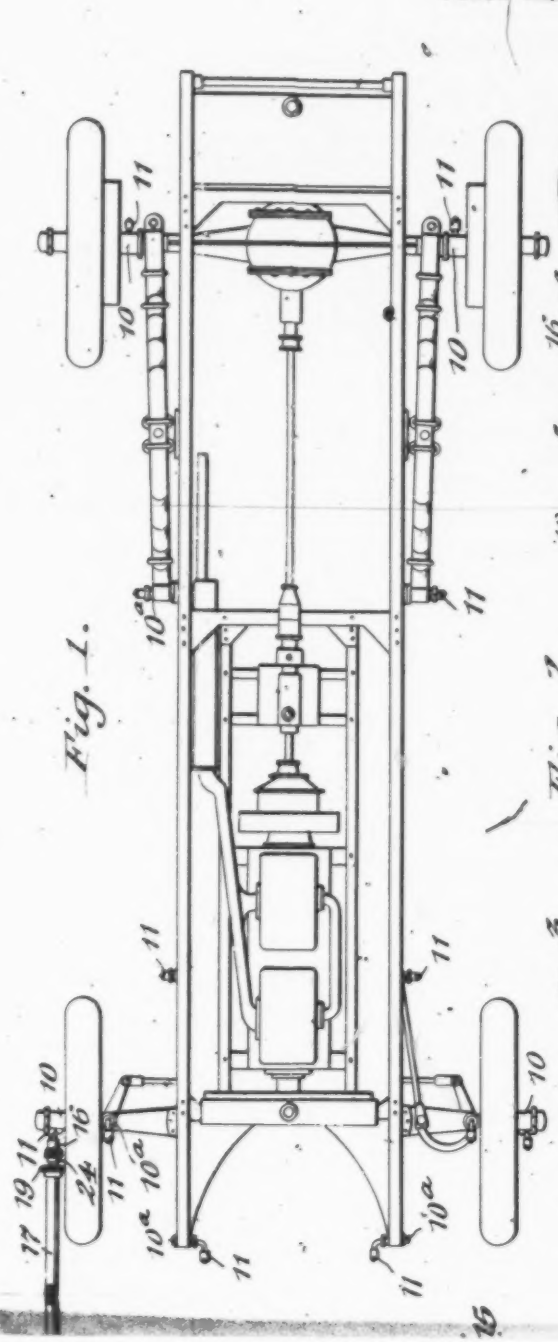

Fig. 1.

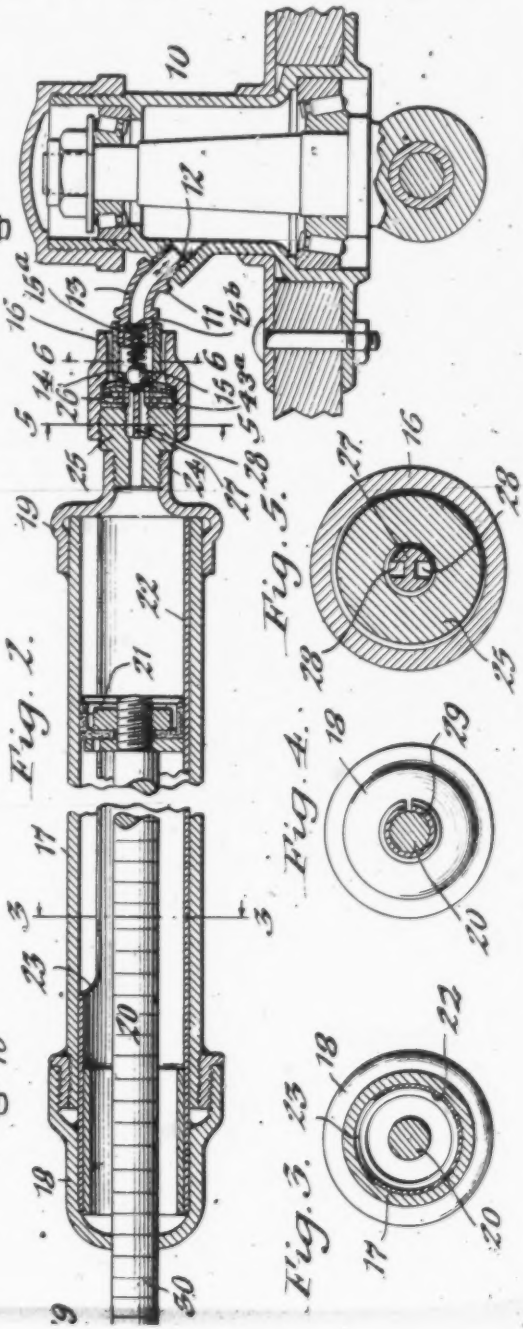

Fig. 2.

Fig. 5.

Fig. 4.

Fig. 3.

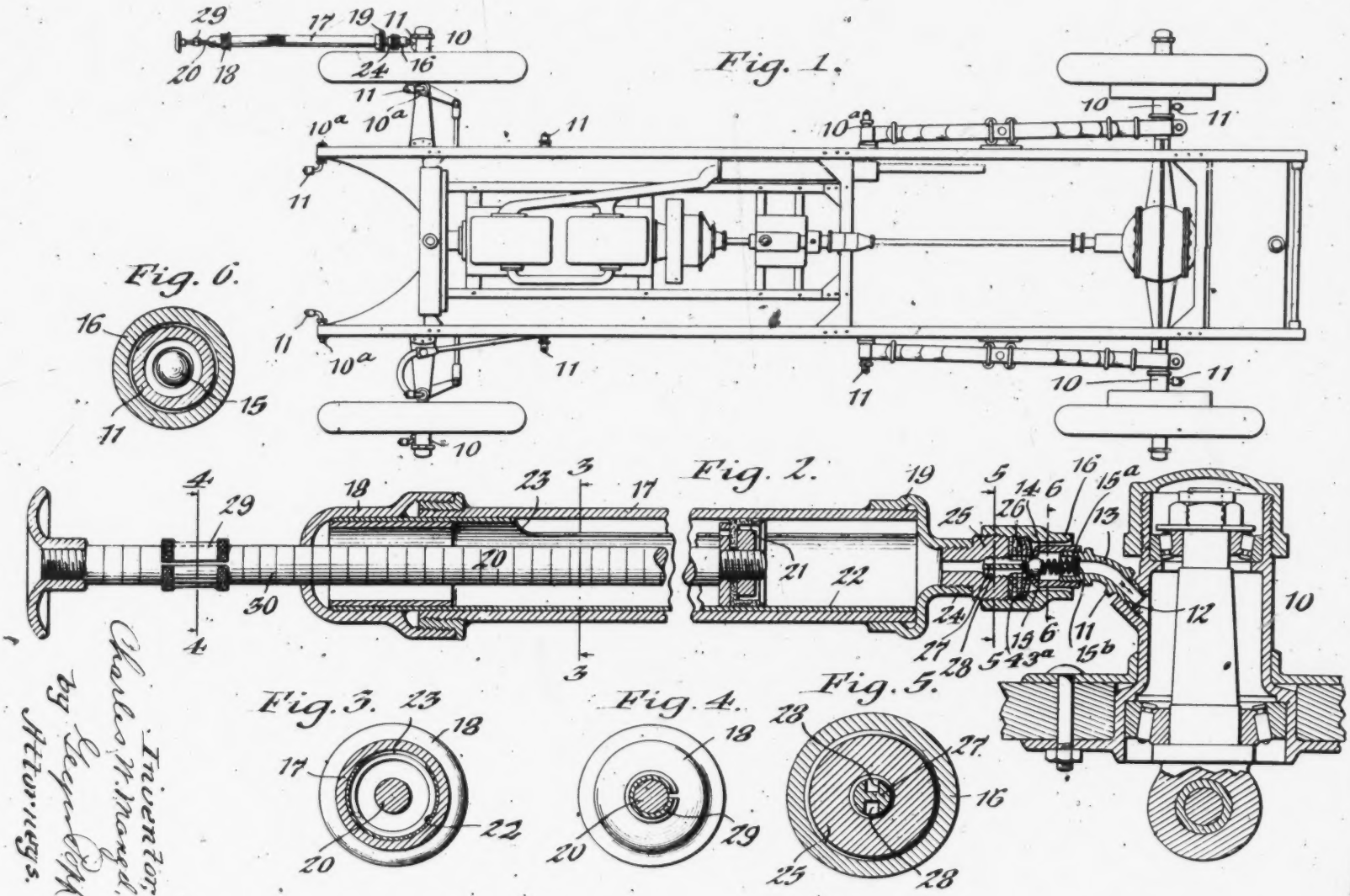

Inventor,
Charles W. Mangel,
by Geo. Ott
Attorneys.

501

June 19, 1923. 1,459,662

C. W. MANZEL

LUBRICATING SYSTEM

Filed Aug. 18, 1920 2 Sheets-Sheet 2

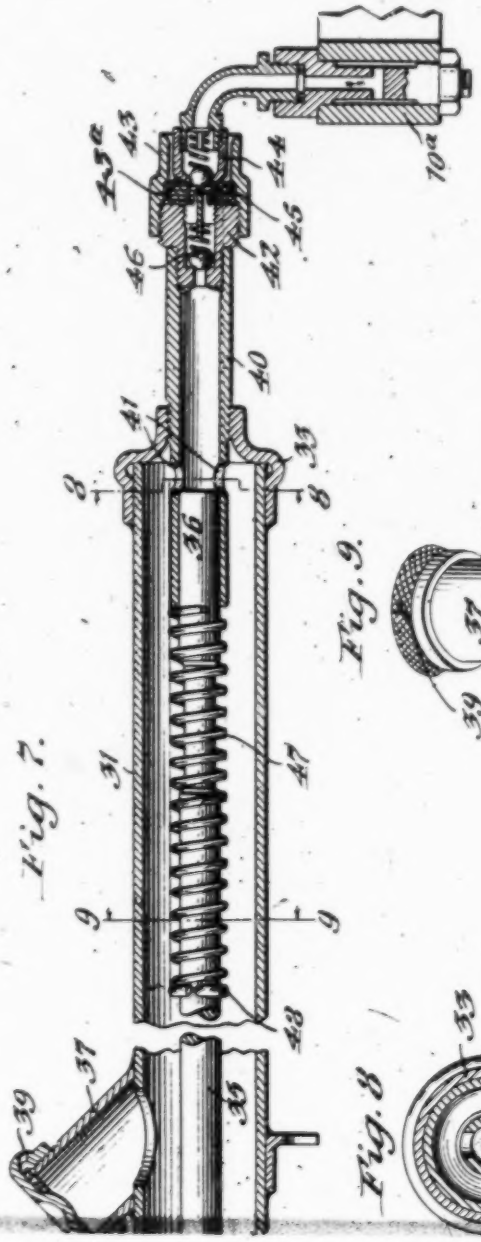

Fig. 7.

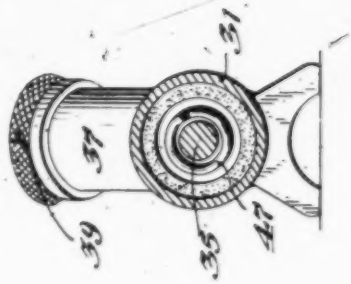

Fig. 9.

Fig. 8.

Fig. 7.

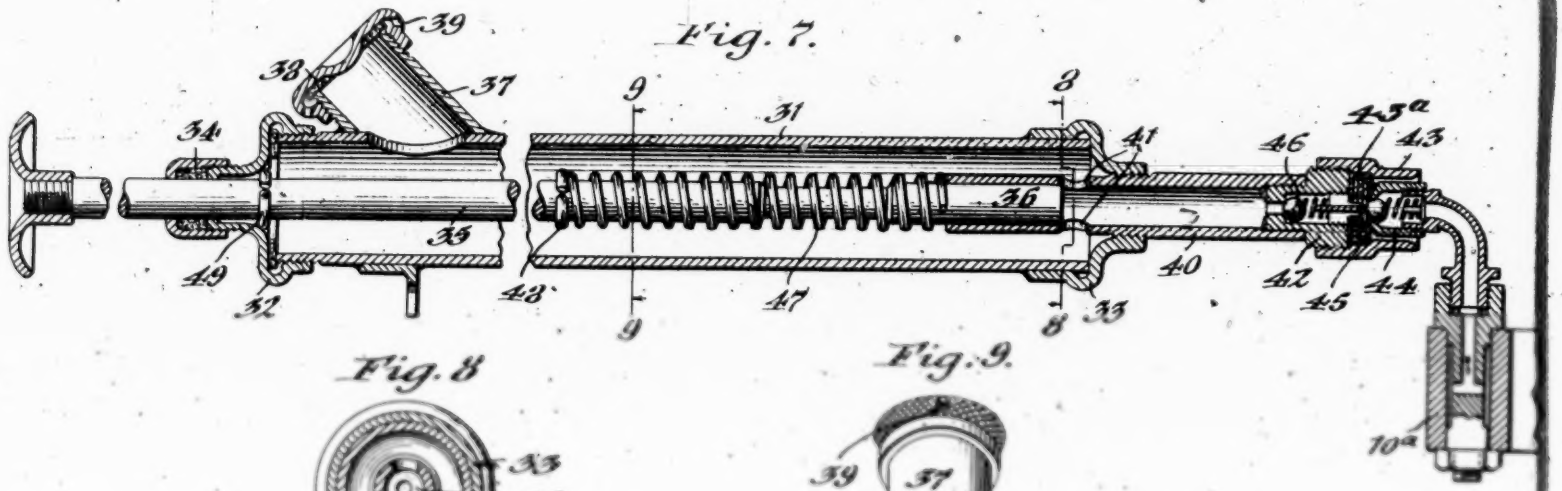

Fig. 8

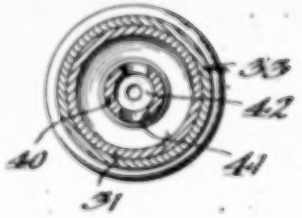

Fig. 9.

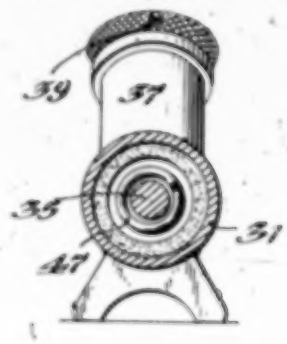

Inventor;
Charles W. Mangel,
by George Popp
Attorneys.

Patented June 19, 1923. 1,459,662

UNITED STATES PATENT OFFICE.

CHARLES W. MANZEL, OF BUFFALO, NEW YORK, ASSIGNOR TO THE BASSICK MANUFACTURING COMPANY, OF CHICAGO, ILLINOIS, A CORPORATION OF DELAWARE.

LUBRICATING SYSTEM.

Application filed August 18, 1920. Serial No. 404,300.

To all whom it may concern:

Be it known that I, CHARLES W. MANZEL, a citizen of the United States, residing at Buffalo, in the county of Erie and State of New York, have invented new and useful Improvements in Lubricating Systems, of which the following is a specification.

This invention relates to a lubricating system designed more particularly for supplying the various bearings of automobiles, motor-trucks, tractors and similar vehicles.

One of its objects is the provision of a lubricating system or apparatus by which oil or grease of any desired consistency can be fed to the parts requiring lubrication, under sufficient pressure to expel any remaining old oil or grease through the bearing joints and force in fresh lubricant, in order to insure thorough and positive lubrication of every bearing.

A further object is to permit quick and convenient lubrication of parts which are remote and ordinarily difficult of access, without the necessity of handling or touching them or going underneath the car, thus avoiding soiling of the hands and clothing.

It is recognized that grease is most efficient for ball and roller bearings, and oil for solid or ordinary bearings having no such anti-friction members; and my improved system contemplates the use of separate force pumps or guns for supplying the two kinds of lubricant, but a single combination gun capable of delivering either oiler or grease may be employed, if desired.

In the accompanying drawings: Figure 1 is a top plan view of an automobile equipped with the improved lubricating system, the body of the car being omitted. Figure 2 is a longitudinal section, on an enlarged scale, of a gun or force pump suitable for supplying the lubricant, and Figure 3 is a detail view of the nipple-neck.

Like numerals refer to like parts in all the figures.

Referring to Figure 1, the bearings of the motor car are replaced by feed-nipples 11, one of these bearings and its feed nipple being shown in vertical section in Fig. 2. This bearing is of the roller type and therefore lubricated with grease. It has the customary internally threaded connection 12 for receiving the feed nipple 11, which has a stem or neck 13 to which it is detachably connected by a screw threaded joint, as shown, or by other suitable means. This neck may be straight or curved, according to the location of the bearing, to render the nipple most accessible to the discharge nozzle of the oil or grease gun, as hereinafter more fully described. But in its preferred construction, this neck or stem 13 is flexible, so that it can be bent into any desired position or at the most convenient angle to facilitate access to it by the lubricant gun. For this purpose the nipple-neck may be constructed of a suitable flexible material, as annealed steel, which is flexible enough to permit such bending and yet stiff enough to remain in position and retain its form under the pressure ordinarily exerted against the nipple by the gun in lubricating the bearing. The nipple is thus universally adjustable, doing away with the necessity of furnishing straight nipples and a variety of elbow nipples of several angles and simplifying and cheapening their manufacture accordingly.

Each of these nipples is provided with a central inlet-orifice 14 which is normally closed by an internal check-valve 15, preferably a spring-pressed valve of the ball type, to retain the lubricant in the bearing and exclude dust and water therefrom. A suitable stop is provided to prevent this valve from being forced back in the bearing nipple by the lubricant far enough to

To all whom it may concern:

Be it known that I, CHARLES W. MANZEL, a citizen of the United States, residing at Buffalo, in the county of Erie and State of New York, have invented new and useful Improvements in Lubricating Systems, of which the following is a specification.

This invention relates to a lubricating system designed more particularly for supplying the various bearings of automobiles, motor-trucks, tractors and similar vehicles.

One of its objects is the provision of a lubricating system or apparatus by which oil or grease of any desired consistency can be fed to the parts requiring lubrication, under sufficient pressure to expel any remaining old oil or grease through the bearing joints and force in fresh lubricant, in order to insure thorough and positive lubrication of every bearing.

A further object is to permit quick and convenient lubrication of parts which are remote and ordinarily difficult of access, without the necessity of handling or touching them or going underneath the car, thus avoiding soiling of the hands and clothing.

It is recognized that grease is most efficient for ball and roller bearings, and oil for solid or ordinary bearings having no such anti-friction members; and my improved system contemplates the use of separate force pumps or guns for supplying the two kinds of lubricant, but a single combination gun capable of delivering either oiler or grease may be employed, if desired.

In the accompanying drawings: Figure 1 is a top plan view of an automobile equipped with the improved lubricating system, the body of the car being omitted. Figure 2 is a longitudinal section, on an enlarged scale, of a gun or force pump suitable for supplying grease to the bearings. Figures 3, 4, 5 and 6 are cross sections of said gun on the correspondingly numbered lines in Figure 2. Figure 7 is a longitudinal section of a gun or pump suitable for supplying oil to the bearings. Figures 8 and 9 are cross sections of this pump on the correspondingly-numbered lines in Fig. 7.

Similar characters of reference indicate corresponding parts throughout the several views.

Referring to Figs. 1–6, the old oil and grease cups of the various bearings 10, 10^a of the motor car are replaced by feed-nipples 11, one of these bearings and its feed nipple being shown in vertical section in Fig. 2. This bearing is of the roller type and therefore lubricated with grease. It has the customary internally threaded connection 12 for receiving the feed nipple 11, which has a stem or neck 13 to which it is detachably connected by a screw threaded joint, as shown, or by other suitable means. This neck may be straight or curved, according to the location of the bearing, to render the nipple most accessible to the discharge nozzle of the oil or grease gun, as hereinafter more fully described. But in its preferred construction, this neck or stem 13 is flexible, so that it can be bent into any desired position or at the most convenient angle to facilitate access to it by the lubricant gun. For this purpose the nipple-neck may be constructed of a suitable flexible material, as annealed steel, which is flexible enough to permit such bending and yet stiff enough to remain in position and retain its form under the pressure ordinarily exerted against the nipple by the gun in lubricating the bearing. The nipple is thus universally adjustable, doing away with the necessity of furnishing straight nipples and a variety of elbow nipples of several angles and simplifying and cheapening *their manufacture accordingly.*

Each of these nipples is provided with a central inlet-orifice 14 which is normally closed by an internal check-valve 15, preferably a spring-pressed valve of the ball type, to retain the lubricant in the bearing and exclude dust and water therefrom. A suitable stop is provided to prevent this valve from being forced back in the bearing nipple by the lubricant far enough to close its throat. The stop shown in the drawings consists of a fixed pin 15^a arranged axially in said neck and extending forwardly from a bridge piece 15^b extending across its throat. The spring of the check valve surrounds this pin.

For supplying grease to bearings having such feed nipples, a comparatively long and slender gun or force pump is employed having a sliding piston and a tubular guide or centering nozzle 16 at its front end which is adapted to slip over the feed nipple and which is rigidly connected to the pump-

body. This nozzle is controlled by and engaged with the nipple by the pump itself which serves as a long handle for this purpose, enabling remote bearings to be conveniently reached through any accessible space without the necessity of going or reaching under the car and soiling the hands and clothing. The preferred grease pump shown in the drawings comprises a long barrel 17 of relatively small diameter closed at its ends by caps or heads 18, 19, the rear one 18 being preferably a detachable screw cap through which passes the rod 20 of the pump piston or plunger 21. Arranged within the pump barrel and secured at its rear end to the screw cap 18 is a cylindrical, open-ended grease magazine or receptacle 22 extending practically throughout the length of the barrel and provided in its side with a filling slot or aperture 23 through which the magazine is filled with grease with a spoon or similar implement. To do this, the rear cap 18 is unscrewed from the pump barrel and the magazine is withdrawn therefrom. The plunger is then drawn back beyond the rear end of said filling aperture, and after filling the magazine, it is replaced and the cap is again secured in place.

Projecting centrally from the front head 19 of the pump-barrel is a hollow neck 24 with which engages the hollow stem of a discharge nipple 25. This nipple carries the guide-nozzle 16 of the pump which projects beyond said nipple, these parts being preferably united by screw threaded joints, as shown in Fig. 2. Housed within the guide nozzle and seated against the face of the pump nipple 25 is a packing washer or gasket 26 of rubber or other appropriate material, the bore of which registers with the bore of said nipple and which is adapted to seat against the head of any one of the feed-nipples 10. This packing preferably consists of a number of disks or laminations of oil proof material. The delivery end of the pump barrel and the receiving end of the bearing-nipple are provided with complementary means, whereby a sealed, lubricant-tight connection may be effected between said elements solely by the application of pressure lengthwise of the pump-area between these parts is thus avoided, and such contact is confined to an area less than that of the pump-piston, thereby insuring the necessary preponderance of the longitudinal pressure on the pump, exerted by the operator, over the resistance or back-pressure tending to break the seal or joint between the pump and the bearing nipple. A perfect and reliable seal is maintained between these parts as long as such longitudinal pressure continues, thus effectually preventing leakage and waste of the lubricant through said joint, even though the oil or grease is forced into tight-fitting bearings at a pressure, for example, of 3000 pounds or more to the square inch, and notwithstanding the absence of a positive connection or coupling device between the gun and the feed nipple. At the same time, the pump is quickly separable from said nipple by simply relieving the forward pressure on the pump and withdrawing its guide nozzle from the nipple, thus rendering it unnecessary to reach under the car to apply or remove said nozzle directly by hand.

When the face of the yielding packing gasket is made convex, the desired central bulge is obtained by tightly clamping its rim between the front end of the gun-nipple 42 and an internal shoulder 43ª of the guide nozzle 43, as shown in Figs. 2 and 7. The guide nozzle preferably has a flared mouth and is fitted somewhat loosely on the bearing nipple, and as the face of the latter is convex, the nozzle is free to rock or swivel thereon to a limited extent, facilitating the engagement of the nozzle therewith.

To prevent undue constriction of the gasket-bore by the bearing nipple under the forward pressure of the pump or its plunger, a fixed core or stem 27 carried by the discharge-nipple 25, extends through said bore, as shown in Fig. 2. The projecting front portion of this core is reduced and provided throughout its length with longitudinal grooves or channels 28 for the passage of the grease into the bearing nipple.

In lubricating a bearing with this grease gun, after filling the magazine 22 and

rel 17 of relatively small diameter closed at its ends by caps or heads 18, 19, the rear one 18 being preferably a detachable screw cap through which passes the rod 20 of the pump piston or plunger 21. Arranged within the pump barrel and secured at its rear end to the screw cap 18 is a cylindrical, open-ended grease magazine or receptacle 22 extending practically throughout the length of the barrel and provided in its side with a filling slot or aperture 23 through which the magazine is filled with grease with a spoon or similar implement. To do this, the rear cap 18 is unscrewed from the pump barrel and the magazine is withdrawn therefrom. The plunger is then drawn back beyond the rear end of said filling aperture, and after filling the magazine, it is replaced and the cap is again secured in place.

Projecting centrally from the front head 19 of the pump-barrel is a hollow neck 24 with which engages the hollow stem of a discharge nipple 25. This nipple carries the guide-nozzle 16 of the pump which projects beyond said nipple, these parts being preferably united by screw threaded joints, as shown in Fig. 2. Housed within the guide nozzle and seated against the face of the pump nipple 25 is a packing washer or gasket 26 of rubber or other appropriate material, the bore of which registers with the bore of said nipple and which is adapted to seat against the head of any one of the feed-nipples 10. This packing preferably consists of a number of disks or laminations of oil proof material. The delivery end of the pump barrel and the receiving end of the bearing-nipple are provided with complementary means, whereby a sealed, lubricant-tight connection may be effected between said elements solely by the application of pressure lengthwise of the pump-barrel and without the use of means for positively coupling the pump to the nipple. The most satisfactory results are obtained when either the face of the packing gasket 26 or the receiving end of the nipple 25 is made convex, or when both of these parts have that contour, as shown in the drawings. By this construction, the central portion of the comparatively hard or rigid bearing nipple compresses the central portion of the yielding or less rigid packing gasket and temporarily changes its contour. Enlargement or spreading of the contact between these parts as long as such longitudinal pressure continues, thus effectually preventing leakage and waste of the lubricant through said joint, even though the oil or grease is forced into tight-fitting bearings at a pressure, for example, of 3000 pounds or more to the square inch, and notwithstanding the absence of a positive connection or coupling device between the gun and the feed nipple. At the same time, the pump is quickly separable from said nipple by simply relieving the forward pressure on the pump and withdrawing its guide nozzle from the nipple, thus rendering it unnecessary to reach under the car to apply or remove said nozzle directly by hand.

When the face of the yielding packing gasket is made convex, the desired central bulge is obtained by tightly clamping its rim between the front end of the gun-nipple 42 and an internal shoulder 43 of the guide nozzle 43, as shown in Figs. 2 and 7. The guide nozzle preferably has a flared mouth and is fitted somewhat loosely on the bearing nipple, and as the face of the latter is convex, the nozzle is free to rock or swivel thereon to a limited extent, facilitating the engagement of the nozzle therewith.

To prevent undue constriction of the gasket-bore by the bearing nipple under the forward pressure of the pump or its plunger, a fixed core or stem 27 carried by the discharge-nipple 25, extends through said bore, as shown in Fig. 2. The projecting front portion of this core is reduced and provided throughout its length with longitudinal grooves or channels 28 for the passage of the grease into the bearing nipple.

In lubricating a bearing with this grease gun, after filling the magazine 22 and replacing it in the pump barrel, as hereinbefore described, the pump is joined to the bearing-nipple by passing its guide nozzle 14 over said nipple and the plunger is then pushed forward a greater or less distance, according to the amount of grease required by the bearing, some bearings requiring more than others. This pressure against the plunger handle is transmitted through the grease and the pump-body to the packing gasket, which is thereby firmly pressed against the end of the bearing-nipple, producing a tight and reliable seal, as before

described. The pump-nozzle 14 serves not only to guide the end of the pump onto the bearing nipple, but also holds it against lateral displacement thereon.

To guide the user in lubricating the bearings, the plunger rod may be provided with an adjustable gage or stop 29 adapted to strike the rear cap of the pump barrel. The gage shown in the drawings consists of a split collar which tightly embraces the said rod and is held in place by friction. If desired, the plunger rod may be provided with a scale 30 with which the gage collar co-operates.

If a bearing-nipple should not extend in the proper direction or stand at the proper angle to conveniently receive the guide-nozzle of the pump, said nipple on account of its flexibility can be bent to the desired angle by means of said nozzle and the pump body, or by a separate tube of the proper length and size to reach and fit over the bearing-nipple.

It will now be understood that the connection 24 between the guide nozzle 16 and the pump-body is rigid and that the pump body itself forms an extended handle by which the nozzle is successively engaged with the several bearing-nipples of an automobile or other piece of mechanism. This renders it possible not only to quickly join the guide-nozzle to the bearing-nipple at a distance and without the necessity of reaching under the car and doing so directly with the hands, but it also enables pressure to be conveniently exerted by means of the plunger and the pump body in the longitudinal direction of said nozzle and nipple to insure a tight joint between them and effectually prevent leakage of the lubricant at that point. For this purpose said guide nozzle and the co-operating free end of the bearing-nipple are substantially parallel with the axis of the pump-body or in straight alinement therewith, as shown, the adjustable neck of the bearing nipple making it possible to use a long pump with a rigid nozzle for exerting such straight and direct pressure on the nipple to form a tight joint or seal.

By avoiding the direct handling of the co-operating joint members of the pump and [illegible] the lubricating connection is not

in Figs. 7–9. It comprises a long and slender oil cylinder or receptacle 31, similar to the barrel 17, closed at its ends by heads 32, 33, the rear head having a stuffing box 34 through which the rod 35 of the plunger 36 passes. The cylinder has a filling spout 37 closed by a cap containing a packing gasket 38. This cap is provided with vent openings 39 which admit air into the receptacle upon partly unscrewing the cap temporarily, to permit the pump to function properly. Arranged in the front portion of the oil cylinder is a longitudinal pump-barrel 40 in which the plunger 36 reciprocates and which is provided in its walls with oil inlet ports 41 communicating with said cylinder, oil being drawn through these ports on the suction or return stroke of the pump and the ports being closed by the plunger on its forward stroke to eject the oil. The barrel 40 extends through and beyond the front head 33 and terminates in a nipple 42 similar to the nipple 27. This nipple in turn carries a guide nozzle 43 like the nozzle 16, which fits over the feed nipple 44 of the bearing 10ª. This nipple is in all respects like the bearing nipple 13 of the roller-bearing 10 and forms a tight seal with the packing gasket 45 of said nozzle when the gun or the plunger is pushed toward it. In this case, the nipple 42 of the pump barrel contains a suitable check valve 46 to prevent the escape of oil from the pump when not engaged with a bearing nipple.

A spring 47 surrounding the plunger rod between the rear end of the pump barrel 36 and a stop collar 48 on the rod serves to effect the return-stroke of the plunger, while a similar collar 49 limits the rearward stroke of said rod by encountering the adjacent cap 32.

In lubricating a bearing with this oil gun, the operation is practically the same as with the grease gun, except that the latter is emptied by one full stroke of the piston, while in the oil gun the plunger may be operated numerous times before the oil receptacle 31 requires refilling.

The pumps preferably have a sufficient capacity to lubricate an automobile several times with one filling.

In both of these embodiments of the lubri-

...n in the drawings consists of a split collar which tightly embraces the said rod and is held in place by friction. If desired, the plunger rod may be provided with a scale 30 with which the gage collar co-operates.

If a bearing-nipple should not extend in the proper direction or stand at the proper angle to conveniently receive the guide-nozzle of the pump, said nipple on account of its flexibility can be bent to the desired angle by means of said nozzle and the pump body, or by a separate tube of the proper length and size to reach and fit over the bearing-nipple.

It will now be understood that the connection 24 between the guide nozzle 16 and the pump-body is rigid and that the pump body itself forms an extended handle by which the nozzle is successively engaged with the several bearing-nipples of an automobile or other piece of mechanism. This renders it possible not only to quickly join the guide-nozzle to the bearing-nipple at a distance and without the necessity of reaching under the car and doing so directly with the hands, but it also enables pressure to be conveniently exerted by means of the plunger and the pump body in the longitudinal direction of said nozzle and nipple to insure a tight joint between them and effectually prevent leakage of the lubricant at that point. For this purpose said guide nozzle and the co-operating free end of the bearing-nipple are substantially parallel with the axis of the pump-body or in straight alinement therewith, as shown, the adjustable neck of the bearing nipple making it possible to use a long pump with a rigid nozzle for exerting such straight and direct pressure on the nipple to form a tight joint or seal.

By avoiding the direct handling of the co-operating joint members of the pump and the bearing, the lubricating operation is not only more convenient and cleaner, but an important saving of time is effected by reason of the absence of coupling devices and the use of a sliding or push-button, enabling a large number of such bearings to be quickly lubricated with ease.

Bearings which require oil rather than grease, can be quickly and conveniently lubricated in the same manner by the use of a force-pump adapted to deliver oil and having a similar discharge and guide-nozzle for receiving the nipples of such bearings. A pump suitable for this purpose is illustrated

...ings 39 which admit air into the receptacle upon partly unscrewing the cap temporarily, to permit the pump to function properly. Arranged in the front portion of the oil cylinder is a longitudinal pump-barrel 40 in which the plunger 36 reciprocates and which is provided in its walls with oil inlet ports 41 communicating with said cylinder, oil being drawn through these ports on the suction or return stroke of the pump and the ports being closed by the plunger on its forward stroke to eject the oil. The barrel 40 extends through and beyond the front head 33 and terminates in a nipple 42 similar to the nipple 27. This nipple in turn carries a guide nozzle 43 like the nozzle 16, which fits over the feed nipple 44 of the bearing 10. This nipple is in all respects like the bearing nipple 13 of the roller-bearing 10 and forms a tight seal with the packing gasket 45 of said nozzle when the gun or the plunger is pushed toward it. In this case, the nipple 42 of the pump barrel contains a suitable check valve 46 to prevent the escape of oil from the pump when not engaged with a bearing nipple.

A spring 47 surrounding the plunger rod between the rear end of the pump barrel 36 and a stop collar 48 on the rod serves to effect the return-stroke of the plunger, while a similar collar 49 limits the rearward stroke of said rod by encountering the adjacent cap 32.

In lubricating a bearing with this oil gun, the operation is practically the same as with the grease gun, except that the latter is emptied by one full stroke of the piston, while in the oil gun the plunger may be operated numerous times before the oil receptacle 31 requires refilling.

The pumps preferably have a sufficient capacity to lubricate an automobile several times with one filling.

In both of these embodiments of the lubricating system the several bearings of an automobile, motor truck, tractor or other machine can be easily and quickly lubricated without going or reaching under the car and without touching or coupling the co-operating joint-members of the pump and the part to be lubricated, rendering the operation comparatively clean and protecting the clothing as well as avoiding soiling of the hands.

In using either of the pumps, after placing its guide nozzle over the bearing nipple, the joint is sealed and a charge of lubricant

is delivered into the bearing by the single act of pushing the sliding plunger in the barrel, which furnishes the necessary pressure to form the oil-tight seal. This application of the gun-nozzle to the bearing nipple and the pushing in of the pump plunger can be done with one hand, enabling the gun to be used in restricted spaces or at points difficult of access where a gun requiring the use of both hands would be exceedingly inconvenient, if not impracticable. No couplings of any kind are employed to connect the pump to the bearing nipples and the pump can therefore be readily joined thereto as well as disconnected without the necessity of manipulating any coupling-parts and without movement of the pump barrel, except the straight forward thrust resulting from the pressure exerted against the piston rod to supply the lubricant, as hereinbefore described.

The co-operating surfaces of the guide nozzle and the bearing nipple are both uninterrupted and free from lugs or similar obstructions, and therefore permit the nozzle to be fully and freely slipped upon the nipple to obtain the necessary tight joint to prevent leakage under the relatively high pressure with which the lubricant is forced into the nipple.

Very satisfactory results have been obtained with a piston 6/16 of an inch in diameter and a discharge passage and gasket bore 3/16 of an inch in diameter, but I do not wish to be limited to these particular dimensions, as they may be varied without departing from the spirit of the invention as summed up in the appended claims.

I claim as my invention:

1. The combination with a nipple for feeding lubricant to a bearing, of means for supplying lubricant to said bearing-nipple under pressure, comprising a pump barrel adapted to bear with its delivery end against the receiving end of said bearing-nipple, a slidable piston reciprocating in said barrel and having an operating rod, a guide nozzle rigidly secured to the delivery end of said barrel in alinement therewith and adapted to loosely pass over said bearing-nipple, said guide nozzle and said bearing nipple being free from interlocking coupling members, [illegible] and adapted to withstand high pressure may be effected between said elements by the application of pressure lengthwise of the pump exerted toward said nipple from any one of a plurality of different directions.

3. The combination with a bearing-nipple having a convex receiving end, of means for supplying lubricant to said nipple under pressure, comprising a force pump provided at its delivery end with a yieldable packing-gasket having a lubricant-passage, said gasket having a convex face constructed to bear against the convex end of said nipple around the edge of the gasket-passage, thereby obtaining a reliable sealing relation between the last-mentioned parts.

4. In a lubricating system, a force-pump comprising a barrel, a sliding piston arranged therein, a guide-nozzle rigidly connected to the front end of said barrel, an apertured packing-gasket immovably arranged in said nozzle and adapted to seat against the end of a bearing-nipple, and means extending into the aperture of said gasket for resisting contraction thereof.

5. In a lubricating system, a force-pump comprising a barrel, a sliding piston arranged therein, a guide-nozzle rigidly connected to the front end of said barrel, an apertured packing-gasket immovably arranged in said nozzle and adapted to seat against the end of a bearing-nipple, and a rigid stem extending into the aperture of said gasket and having lubricant-channels.

6. The combination with a lubricant receptacle, of a compressor for supplying lubricant under pressure thereto comprising means for subjecting the lubricant to pressure by a manual force exerted upon said compressor toward said receptacle, and a rigid discharge conduit having means at its free end actuated by said force for making a sealed connection with said receptacle irrespective of the angle between said conduit and said receptacle.

7. The combination with a lubricant receptacle, of a compressor for supplying lubricant thereto, comprising a barrel having a rigid discharge conduit provided at its outer end with means for loosely receiving said lubricant receptacle and making a sealed connection therewith from various angles, a valve in said discharge con[illegible]

inconvenient, if not impracticable. No couplings of any kind are employed to connect the pump to the bearing nipples and the pump can therefore be readily joined thereto as well as disconnected without the necessity of manipulating any coupling-parts and without movement of the pump barrel, except the straight forward thrust resulting from the pressure exerted against the piston rod to supply the lubricant, as hereinbefore described.

The co-operating surfaces of the guide nozzle and the bearing nipple are both uninterrupted and free from lugs or similar obstructions, and therefore permit the nozzle to be fully and freely slipped upon the nipple to obtain the necessary tight joint to prevent leakage under the relatively high pressure with which the lubricant is forced into the nipple.

Very satisfactory results have been obtained with a piston 6/16 of an inch in diameter and a discharge passage and gasket bore 3/16 of an inch in diameter, but I do not wish to be limited to these particular dimensions, as they may be varied without departing from the spirit of the invention as summed up in the appended claims.

I claim as my invention:

1. The combination with a nipple for feeding lubricant to a bearing, of means for supplying lubricant to said bearing-nipple under pressure, comprising a pump barrel adapted to bear with its delivery end against the receiving end of said bearing-nipple, a slidable piston reciprocating in said barrel and having an operating rod, a guide nozzle rigidly secured to the delivery end of said barrel in alinement therewith and adapted to loosely pass over said bearing-nipple, said guide nozzle and said bearing nipple being free from interlocking coupling members, whereby the nozzle may be slipped on and off the bearing nipple without restraint and the delivery end of the barrel joined to the receiving end of said bearing nipple by longitudinal pressure against said piston-rod.

2. The combination with a nipple for feeding lubricant to a bearing, of a force pump for delivering the lubricant into said nipple, and complementary means located at the receiving end of said nipple and the delivery end of said pump, whereby a sealed lubricant-tight connection capable of withstanding the pressure exerted by the pump is established, said means comprising a yieldable packing-gasket having a lubricant-passage, said gasket having a convex face constructed to bear against the convex end of said nipple around the edge of the gasket-passage, thereby obtaining a reliable sealing relation between the last-mentioned parts.

4. In a lubricating system, a force-pump comprising a barrel, a sliding piston arranged therein, a guide-nozzle rigidly connected to the front end of said barrel, an apertured packing-gasket immovably arranged in said nozzle and adapted to seat against the end of a bearing-nipple, and means extending into the aperture of said gasket for resisting contraction thereof.

5. In a lubricating system, a force-pump comprising a barrel, a sliding piston arranged therein, a guide-nozzle rigidly connected to the front end of said barrel, an apertured packing-gasket immovably arranged in said nozzle and adapted to seat against the end of a bearing-nipple, and a rigid stem extending into the aperture of said gasket and having lubricant-channels.

6. The combination with a lubricant receptacle, of a compressor for supplying lubricant under pressure thereto comprising means for subjecting the lubricant to pressure by a manual force exerted upon said compressor toward said receptacle, and a rigid discharge conduit having means at its free end actuated by said force for making a sealed connection with said receptacle irrespective of the angle between said conduit and said receptacle.

7. The combination with a lubricant receptacle, of a compressor for supplying lubricant thereto, comprising a barrel having a rigid discharge conduit provided at its outer end with means for loosely receiving said lubricant receptacle and making a sealed connection therewith from various angles, a valve in said discharge conduit, and a piston operable by a manual force exerted toward said receptacle to place pressure upon the lubricant in said discharge conduit, said valve and connection-making means being actuated by the same force which actuates said piston.

8. A lubricating system comprising a receptacle for receiving lubricant, said receptacle tapering toward its outer end, a lubricant compressor having a rigid discharge conduit provided at its outer end with a coupling member rigidly secured thereto,

comprising a guide nozzle for receiving said nipple, a gasket in said nozzle for contacting with said nipple, said nipple and gasket having communicating openings.

9. A lubricating system comprising a receptacle for receiving lubricant, said receptacle tapering toward its outer end, a lubricant compressor provided at one end with a coupling member, rigidly secured thereto, comprising a guide nozzle for loosely receiving said nipple, a gasket in said sleeve for contacting with said nipple, said nipple and gasket having communicating openings.

10. A lubricating system comprising a receptacle for receiving lubricant, said receptacle tapering toward its outer end, a lubricant compressor having a rigid discharge conduit provided at its outer end with a guide nozzle for receiving said nipple, a spring pressed valve normally closing said discharge conduit, and means for establishing a sealed contact between said guide nozzle and said nipple, and at the same time opening said valve by a manual pressure exerted on said compressor in a direction toward said nipple, the connection between said guide nozzle and said nipple being such as to permit the pressure on said compressor to be exerted toward said nipple from a plurality of different directions.

11. A lubricating system comprising a receptacle for receiving lubricant, said receptacle tapering toward its outer end, a lubricant compressor having a rigid discharge conduit provided at its outer end with a guide nozzle for loosely receiving said nipple, and means for establishing a sealed contact between said guide nozzle and said nipple, the connection between said guide nozzle and said nipple being such as to permit manual pressure on said compressor to be exerted toward said nipple from a plurality of different directions.

12. The combination with a lubricant receptacle, one end of which tapers outwardly, and a compressor for supplying lubricant to said receptacle, comprising means for making a sealed connection with said nipple by manual pressure exerted upon said compressor in any one of a plurality of different directions.

13. The combination with a bearing nipple of a pump for supplying lubricant under pressure thereto, said pump having a barrel provided with a rigid discharge conduit, means connected with the free end of said discharge conduit for loosely receiving said bearing nipple and making a sealed joint therewith when manual pressure is exerted on said pump toward said bearing nipple from any one of a plurality of different directions, and means actuated by such pressure for exerting pressure on the lubricant, opening said valve, and maintaining said sealed joint.

14. The combination with a bearing nipple of a pump for supplying lubricant under pressure thereto, said pump having a barrel provided with a rigid discharge conduit, means connected with the free end of said discharge conduit for loosely receiving said bearing nipple and making a sealed joint therewith when manual pressure is exerted on said pump toward said bearing nipple from any one of a plurality of different directions, and means actuated by such pressure for exerting pressure on the lubricant.

15. The combination with a bearing nipple of a pump for supplying lubricant under pressure thereto, said pump having a barrel provided with a rigid discharge conduit, means connected with a free end of said discharge conduit for loosely receiving said bearing nipple and making a sealed joint therewith when manual pressure is exerted on said pump toward said bearing nipple from any one of a plurality of different directions, and means actuated by such pressure for maintaining said sealed joint.

16. The combination with a bearing nipple of a pump for supplying lubricant thereto, said pump having a barrel, a rigid discharge conduit extending from said barrel and provided at its free end with means for loosely receiving the end of said bearing nipple and making a sealed joint therewith from any one of a plurality of different directions, said pump comprising a piston actuated by manual pressure exerted toward and upon said bearing nipple for exerting pressure upon the lubricant in said barrel.

17. The combination with a bearing nipple, of a pump for supplying lubricant thereto, said pump having a barrel, a rigid discharge conduit extending from said barrel and provided at its free end with means for loosely receiving the end of said bearing

having communicating openings.

9. A lubricating system comprising a receptacle for receiving lubricant, said receptacle tapering toward its outer end, a lubricant compressor provided at one end with a coupling member, rigidly secured thereto, comprising a guide nozzle for loosely receiving said nipple, a gasket in said sleeve for contacting with said nipple, said nipple and gasket having communicating openings.

10. A lubricating system comprising a receptacle for receiving lubricant, said receptacle tapering toward its outer end, a lubricant compressor having a rigid discharge conduit provided at its outer end with a guide nozzle for receiving said nipple, a spring pressed valve normally closing said discharge conduit, and means for establishing a sealed contact between said guide nozzle and said nipple, and at the same time opening said valve by a manual pressure exerted on said compressor in a direction toward said nipple, the connection between said guide nozzle and said nipple being such as to permit the pressure on said compressor to be exerted toward said nipple from a plurality of different directions.

11. A lubricating system comprising a receptacle for receiving lubricant, said receptacle tapering toward its outer end, a lubricant compressor having a rigid discharge conduit provided at its outer end with a guide nozzle for loosely receiving said nipple, and means for establishing a sealed contact between said guide nozzle and said nipple, the connection between said guide nozzle and said nipple being such as to permit manual pressure on said compressor to be exerted toward said nipple from a plurality of different directions.

12. The combination with a lubricant receptacle, one end of which tapers outwardly, and a compressor for supplying lubricant to said receptacle, comprising means for making a sealed connection with said nipple by manual pressure exerted upon said compressor in any one of a plurality of different directions.

13. The combination with a bearing nipple of a pump for supplying lubricant under pressure thereto, said pump having a barrel provided with a rigid discharge conduit, a spring pressed valve in said discharge conduit, means connected with therewith when manual pressure is exerted on said pump toward said bearing nipple from any one of a plurality of different directions, and means actuated by such pressure for exerting pressure on the lubricant, opening said valve, and maintaining said sealed joint.

14. The combination with a bearing nipple of a pump for supplying lubricant under pressure thereto, said pump having a barrel provided with a rigid discharge conduit, means connected with the free end of said discharge conduit for loosely receiving said bearing nipple and making a sealed joint therewith when manual pressure is exerted on said pump toward said bearing nipple from any one of a plurality of different directions, and means actuated by such pressure for exerting pressure on the lubricant.

15. The combination with a bearing nipple of a pump for supplying lubricant under pressure thereto, said pump having a barrel provided with a rigid discharge conduit, means connected with a free end of said discharge conduit for loosely receiving said bearing nipple and making a sealed joint therewith when manual pressure is exerted on said pump toward said bearing nipple from any one of a plurality of different directions, and means actuated by such pressure for maintaining said sealed joint.

16. The combination with a bearing nipple of a pump for supplying lubricant thereto, said pump having a barrel, a rigid discharge conduit extending from said barrel and provided at its free end with means for loosely receiving the end of said bearing nipple and making a sealed joint therewith from any one of a plurality of different directions, said pump comprising a piston actuated by manual pressure exerted toward and upon said bearing nipple for exerting pressure upon the lubricant in said barrel.

17. The combination with a bearing nipple, of a pump for supplying lubricant thereto, said pump having a barrel, a rigid discharge conduit extending from said barrel and provided at its free end with means for loosely receiving the end of said bearing nipple and making a sealed joint therewith from any one of a plurality of different directions when manual pressure is exerted upon said pump toward said receptacle.

CHARLES W. MANZEL.

DISCLAIMER.

1,459,662.—*Charles W. Manzel*, Buffalo, N. Y. LUBRICATING SYSTEM. Patent dated June 19, 1923. Disclaimer filed May 21, 1928, by the assignee, *The Bassick Manufacturing Company.*

Hereby enters this disclaimer to that part of the claims in said specification which is in the following words, to wit:

"8. A lubricating system comprising a receptacle for receiving lubricant, said receptacle tapering toward its outer end, a lubricant compressor having a rigid discharge conduit provided at its outer end with a coupling member rigidly secured thereto, comprising a guide nozzle for receiving said nipple, a gasket in said nozzle for contacting with said nipple, said nipple and gasket having communicating openings.

"9. A lubricating system comprising a receptable for receiving lubricant, said receptacle tapering toward its outer end, a lubricant compressor provided at one end with a coupling member, rigidly secured thereto, comprising a guide nozzle for loosely receiving said nipple, a gasket in said sleeve for contacting with said nipple, said nipple and gasket having communicating openings."

[*Official Gazette June 5, 1928.*]

508

May 20, 1924. 1,494,652

C. F. WALLACE

GREASE CONTAINER

Filed Jan. 11 1922

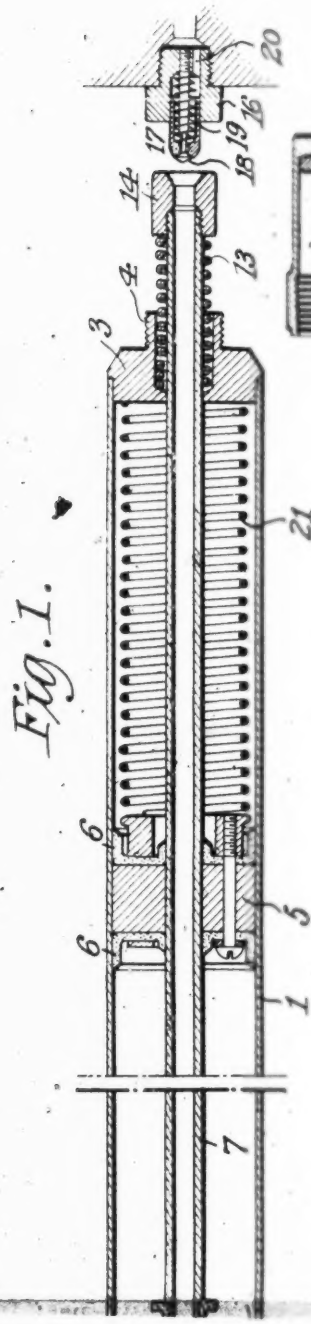

Fig. 1.

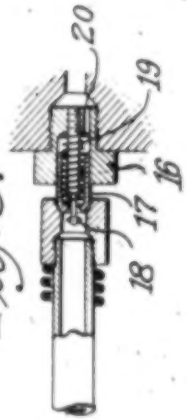

Fig. 3.

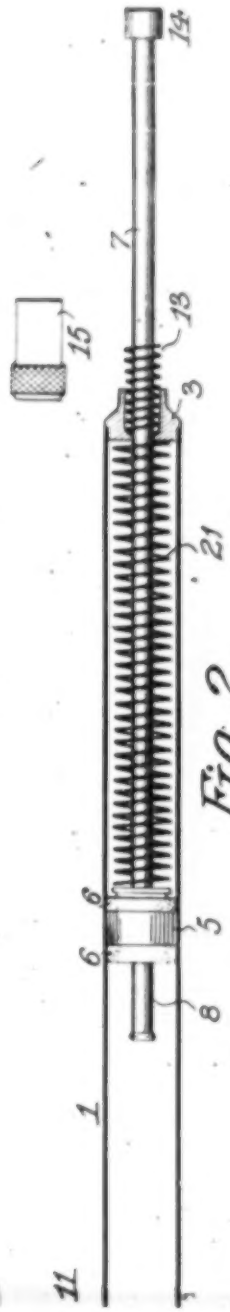

Fig. 2.

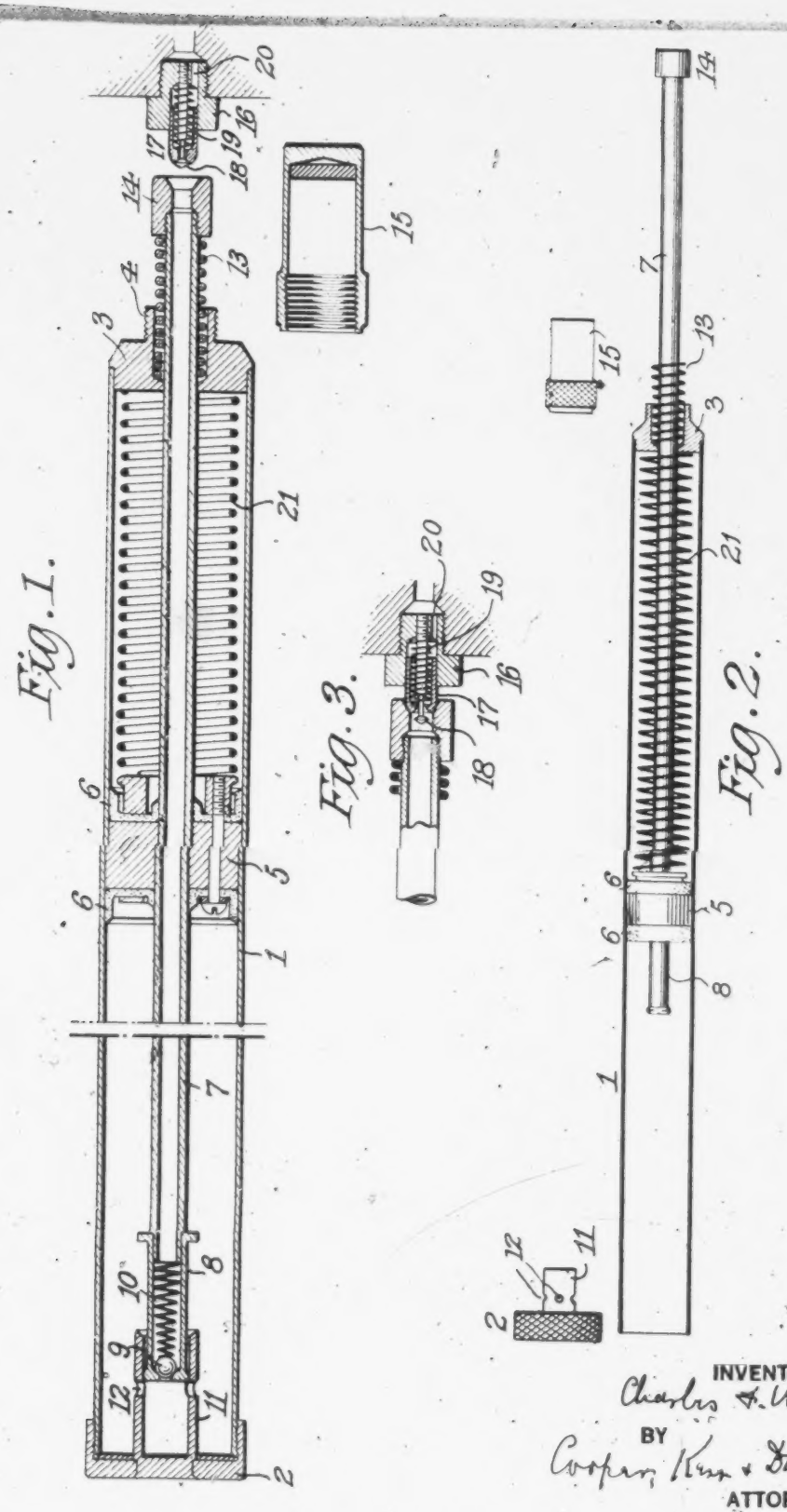

INVENTOR
Charles F. Wallace
BY
Cooper, Kerr & Dunham,
ATTORNEYS.

Patented May 20, 1924. 1,494,652

UNITED STATES PATENT OFFICE.

CHARLES F. WALLACE, OF WESTFIELD, NEW JERSEY.

GREASE CONTAINER.

Application filed January 11, 1922. Serial No. 528,422. REISSUED

To all whom it may concern:

Be it known that I, CHARLES F. WALLACE, being a citizen of the United States, residing at Westfield, in the county of Union and State of New Jersey, U. S. A., have invented certain new and useful Improvements in Grease Containers, of which the following is a full, clear, and exact description.

The invention for which by these presents I seek protection by Letters Patent of the United States, is an improvement in forced feed lubricating devices, more commonly known as grease guns, which in general may be described as means for applying under a certain pressure, the lubricant to such parts as the bearings of internal combustion engines and the like.

Usually such parts are lubricated by heavy oil or grease stored in permanent receptacles attached to the engine, or by means which require the removal of caps or other parts to permit access to the bearings, and by devices which are unhandy and more or less difficult to use or manipulate. My object has been, in the devising of the means hereinafter set forth, to produce a simple and thoroughly practicable device that will accomplish the desired results more quickly and easily than others heretofore intended or used for this purpose, and to this end my improvement comprises a cylinder containing a spring actuated piston and constituting the reservoir for a heavy oil or grease, and having a tube longitudinally movable therein against spring pressure provided with a grease pump at the rear end, and a discharge conical cavity at the forward end which is designed to fit over a specially designed connection attached to the part to be lubricated.

This device in the most practicable form in which I have produced it is illustrated in the accompanying drawing, in which—

Fig. 1 is a longitudinal section of the instrument is a metal cylinder 1, threaded at its rear end to receive a cap 2, and having at its forward end a closing head 3 provided with a threaded extension 4. Within this cylinder is a piston 5 with double cup leathers 6 and a spiral spring 21 intermediate said piston and the head 3. The function of this spring is merely for the purpose of maintaining the piston in contact with the body of contained lubricant in order that the latter may be maintained at the rear end of the container in all positions of the latter. It does not have sufficient force to do more than this.

Extending entirely through the cylinder 1 is a tube 7, the piston 5 and the head 3 having suitable openings through them to permit its free passage. The rear end of the said tube carries a cap or extension 8 having a perforated closed end and containing a ball valve 9 seated on a spiral spring 10.

The cap 2 has a cylindrical extension 11 with ports 12, and fits snugly over the cap or extension 8.

At the forward end of the instrument a spiral spring 13 is interposed between a head 14 and the head 3 the said head 14 being screwed to the end of the tube 7. This head 14 forms the discharge end of the tube and is formed with a conical cavity. A screw cap 15 is used to close the tube 7 when the device is not in use, and this cap screws onto the extension 4.

With this device are used connections with the bearings or other parts to be lubricated consisting of plugs 16 hollowed out to receive a movable cup 17 and a plunger 18, with a head that normally closes the passage into the plug, and a spiral spring 19 that tends to keep the passage into the plug closed. These plugs are set or screwed into the stationary parts of the apparatus to be

To all whom it may concern:

Be it known that I, CHARLES F. WALLACE, being a citizen of the United States, residing at Westfield, in the county of Union and State of New Jersey, U. S. A., have invented certain new and useful Improvements in Grease Containers, of which the following is a full, clear, and exact description.

The invention for which by these presents I seek protection by Letters Patent of the United States, is an improvement in forced feed lubricating devices, more commonly known as grease guns, which in general may be described as means for applying under a certain pressure, the lubricant to such parts as the bearings of internal combustion engines and the like.

Usually such parts are lubricated by heavy oil or grease stored in permanent receptacles attached to the engine, or by means which require the removal of caps or other parts to permit access to the bearings, and by devices which are unhandy and more or less difficult to use or manipulate. My object has been, in the devising of the means hereinafter set forth, to produce a simple and thoroughly practicable device that will accomplish the desired results more quickly and easily than others heretofore intended or used for this purpose, and to this end my improvement comprises a cylinder containing a spring actuated piston and constituting the reservoir for a heavy oil or grease, and having a tube longitudinally movable therein against spring pressure provided with a grease pump at the rear end, and a discharge conical cavity at the forward end which is designed to fit over a specially designed connection attached to the part to be lubricated.

This device in the most practicable form in which I have produced it is illustrated in the accompanying drawing, in which—

Fig. 1 is a longitudinal section of the grease gun, showing detached therefrom a screw cap and the device connected to the part to be lubricated through which the grease is forced.

Fig. 2 is a general view, mainly in elevation of the same device, the two caps being shown as detached.

Fig. 3 is a sectional view of the discharge end of the gun in operative relation to the connection to the bearing or other part to be lubricated.

The main portion of the body of the instrument is a metal cylinder 1, threaded at its rear end to receive a cap 2, and having at its forward end a closing head 3 provided with a threaded extension 4. Within this cylinder is a piston 5 with double cup leathers 6 and a spiral spring 21 intermediate said piston and the head 3. The function of this spring is merely for the purpose of maintaining the piston in contact with the body of contained lubricant in order that the latter may be maintained at the rear end of the container in all positions of the latter. It does not have sufficient force to do more than this.

Extending entirely through the cylinder 1 is a tube 7, the piston 5 and the head 3 having suitable openings through them to permit its free passage. The rear end of the said tube carries a cap or extension 8 having a perforated closed end and containing a ball valve 9 seated on a spiral spring 10.

The cap 2 has a cylindrical extension 11 with ports 12, and fits snugly over the cap or extension 8.

At the forward end of the instrument a spiral spring 13 is interposed between a head 14 and the head 3 the said head 14 being screwed to the end of the tube 7. This head 14 forms the discharge end of the tube and is formed with a conical cavity. A screw cap 15 is used to close the tube 7 when the device is not in use, and this cap screws onto the extension 4.

With this device are used connections with the bearings or other parts to be lubricated consisting of plugs 16 hollowed out to receive a movable cup 17 and a plunger 18, with a head that normally closes the passage into the plug, and a spiral spring 19 that tends to keep the passage into the plug closed. These plugs are set or screwed into the stationary parts of the apparatus to be lubricated and contain passages 20 leading to the bearings or other parts which are to receive the lubricant.

The operation of the device is as follows. To fill the gun the cap 2 is removed and the heavy oil or grease is either drawn or packed in until the piston 5 is forced back to the limit of the possible compression of the spiral spring, when the cap 2 is replaced. The tube 7 may be drawn out of the forward end of the container engaging with the piston 5 and moving the same to create the motion that draws in the lubri-

cant. The only function of the spring 21 is thereafter to keep the piston 5 firmly against the body of grease within the cylinder.

When lubricant is to be applied the cap 15 is removed and the conical cavity in the head 14 is placed over the rounded end of the cup of the plug 16. The cylinder 1 is then forced forward one or two times with the result that the parts 8 and 12, acting as a force pump when the rear end of the tube 7 is forced into the cylindrical extension 11, force grease through the tube 7 and thence through the opening in the cup 17, formed when said cup is forced back by the pressure applied to the cylinder 1.

When pressure on the cylinder ceases, the spring 13 compressed by such pressure withdraws the valve containing cap 8 from the hollow extension 11 and this draws in the grease from the cylinder 1 through the ports 12, and in this way a measured quantity of grease may be injected into and through the connections 14 at each stroke or forward movement of the device.

This device has many advantages. No fixed connections between the grease supply and the parts to be lubricated are necessary. The bearings or other parts are always closed to prevent access of dirt thereto. The rounded head of the connection and the conical cavity in the tube 7 constitute a ball and socket joint, thus permitting the device to be applied and used at widely varying angles, and the rounded top of the connection may be readily cleaned before applying the grease gun.

Broadly considered the plug connection by which the grease is introduced, is any device in which the pressure of the gun or the pressure of the grease in the gun opens the passage to the parts to be lubricated, and the connection illustrated is merely typical of such devices. It should further be pointed out that the area of the pump in the grease gun must be equal to or greater than the area of contact between the gun and the grease cup or connection as otherwise the grease would escape at the entrance at the end of the gun when pressure is applied to operate the pump.

By means of this device a considerable

of the container, a longitudinally movable tube extending through the container and the piston and having a projecting part that engages with and moves the piston when it is drawn forward and compresses the piston spring, thereby providing back of said piston a suction that may be utilized for filling the container with lubricant when the cap is removed.

2. A forced feed lubricating device comprising in combination, a container for the lubricant, a longitudinally movable tube extending through the container, a force pump at the rear of the container operated by the reciprocatory movement of said tube, a piston through which said tube passes, and a spring acting on said piston with only sufficient force to maintain it in contact with the contained lubricant.

3. A forced feed lubricating device comprising in combination, a container for the lubricant and a spring-seated piston therein adapted by the force of its spring to be merely maintained in contact with the body of contained lubricant, a pump chamber containing side perforations attached to the rear end of the container, a longitudinally movable lubricant tube with a closed end extending through the container and forming with the pump chamber a piston tube, a valve in the closed end of said tube, and a spiral spring acting upon the tube and having sufficient force to restore the same after it has been forced back and thereby create in the pump a suction which fills it with lubricant.

4. A forced feed lubricating device comprising in combination, a cylindrical container, a reciprocatory tube extending through the same, and a force pump at the rear end of the container for which said tube constitutes the piston, said tube having a valve controlled orifice in its rear closed end, and a passage for lubricant in its forward end, the areas of the said passage and of the force pump chamber being different, for the purpose set forth.

5. A device of the kind described, comprising in combination, a cylindrical grease container, a piston therein, a spring acting upon said piston with only sufficient force to maintain it in contact with the contained lubricant, a hollow tube extending through

end of the tube 7 is forced into the cylindrical extension 11, force grease through the tube 7 and thence through the opening in the cup 17, formed when said cup is forced back by the pressure applied to the cylinder 1.

When pressure on the cylinder ceases, the spring 13 compressed by such pressure withdraws the valve containing cap 8 from the hollow extension 11 and this draws in the grease from the cylinder 1 through the ports 12, and in this way a measured quantity of grease may be injected into and through the connections 14 at each stroke or forward movement of the device.

This device has many advantages. No fixed connections between the grease supply and the parts to be lubricated are necessary. The bearings or other parts are always closed to prevent access of dirt thereto. The rounded head of the connection and the conical cavity in the tube 7 constitute a ball and socket joint, thus permitting the device to be applied and used at widely varying angles, and the rounded top of the connection may be readily cleaned before applying the grease gun.

Broadly considered the plug connection by which the grease is introduced, is any device in which the pressure of the gun or the pressure of the grease in the gun opens the passage to the parts to be lubricated, and the connection illustrated is merely typical of such devices. It should further be pointed out that the area of the pump in the grease gun must be equal to or greater than the area of contact between the gun and the grease cup or connection as otherwise the grease would escape at the entrance at the end of the gun when pressure is applied to operate the pump.

By means of this device a considerable number of bearings or other parts may be lubricated in much shorter time than is now required for the proper use of any other device for a similar purpose of which I am aware.

Having now described my improvement of its mode of operation or use, what I claim is—

1. A forced feed lubricating device comprising in combination, a container, a removable cap closing its rear end, a spring-actuated piston occupying the forward part

[illegible] in combination, a container lubricant, a longitudinally movable tube extending through the container, a force pump at the rear of the container operated by the reciprocatory movement of said tube, a piston through which said tube passes, and a spring acting on said piston with only sufficient force to maintain it in contact with the contained lubricant.

3. A forced feed lubricating device comprising in combination, a container for the lubricant and a spring-seated piston therein adapted by the force of its spring to be merely maintained in contact with the body of contained lubricant, a pump chamber containing side perforations attached to the rear end of the container, a longitudinally movable lubricant tube with a closed end extending through the container and forming with the pump chamber a piston tube, a valve in the closed end of said tube, and a spiral spring acting upon the tube and having sufficient force to restore the same after it has been forced back and thereby create in the pump a suction which fills it with lubricant.

4. A forced feed lubricating device comprising in combination, a cylindrical container, a reciprocatory tube extending through the same, and a force pump at the rear end of the container for which said tube constitutes the piston, said tube having a valve controlled orifice in its rear closed end, and a passage for lubricant in its forward end, the areas of the said passage and of the force pump chamber being different, for the purpose set forth.

5. A device of the kind described, comprising in combination, a cylindrical grease container, a piston therein, a spring acting upon said piston with only sufficient force to maintain it in contact with the contained lubricant, a hollow tube extending through the forward end of the container and the piston, a force pump connected with the rear end of the tube, which operates to force lubricant from the container through the tube when the latter is pushed back into the container and a spring acting upon said tube to withdraw it from its pushed back position therein.

6. A device of the kind described, comprising in combination, a cylindrical grease container, a cap for the rear end thereof having a hollow extension with ports in its

ide walls, a spring seated piston in the container, a spring acting upon said piston with only sufficient force to maintain it in contact with the contained lubricant, a reciprocatory tube extending longitudinally through the container and piston, and a valve controlled attachment at its end which enters the hollow extension in the cap, and forms therewith a pump to force lubricant from the container through the tube.

In testimony whereof I hereto affix my signature.

CHARLES F. WALLACE.

512

Nov. 22, 1927. Re. 16,787

C. F. WALLACE

GREASE CONTAINER

Original Filed Jan. 11, 1922

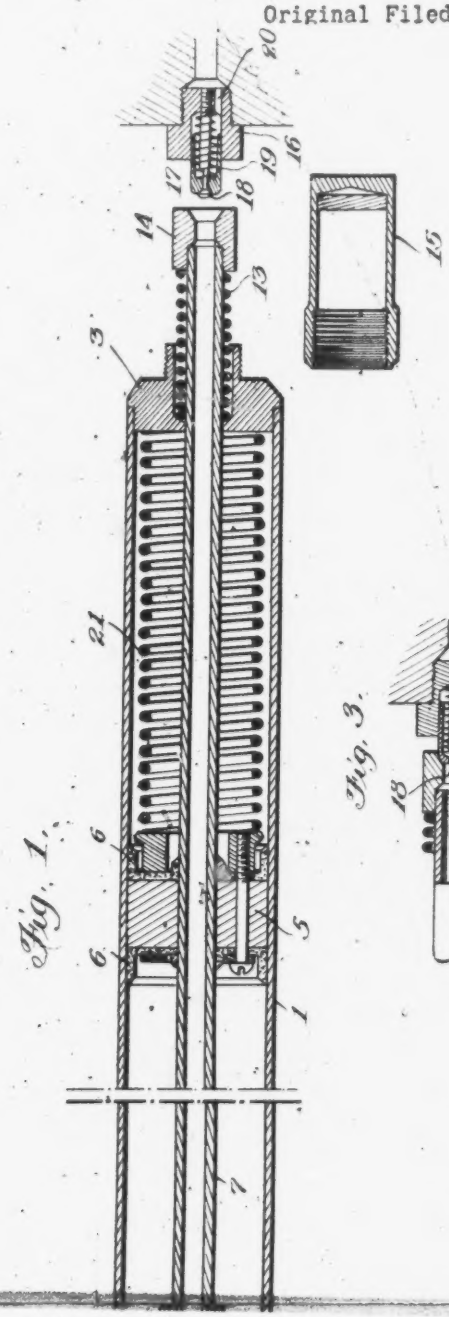

Fig. 1.

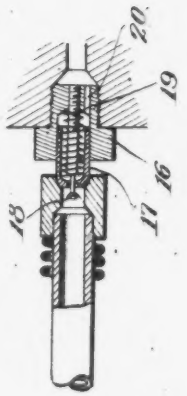

Fig. 3.

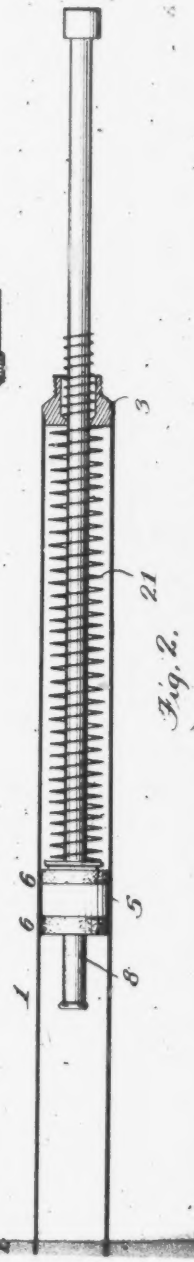

Fig. 2.

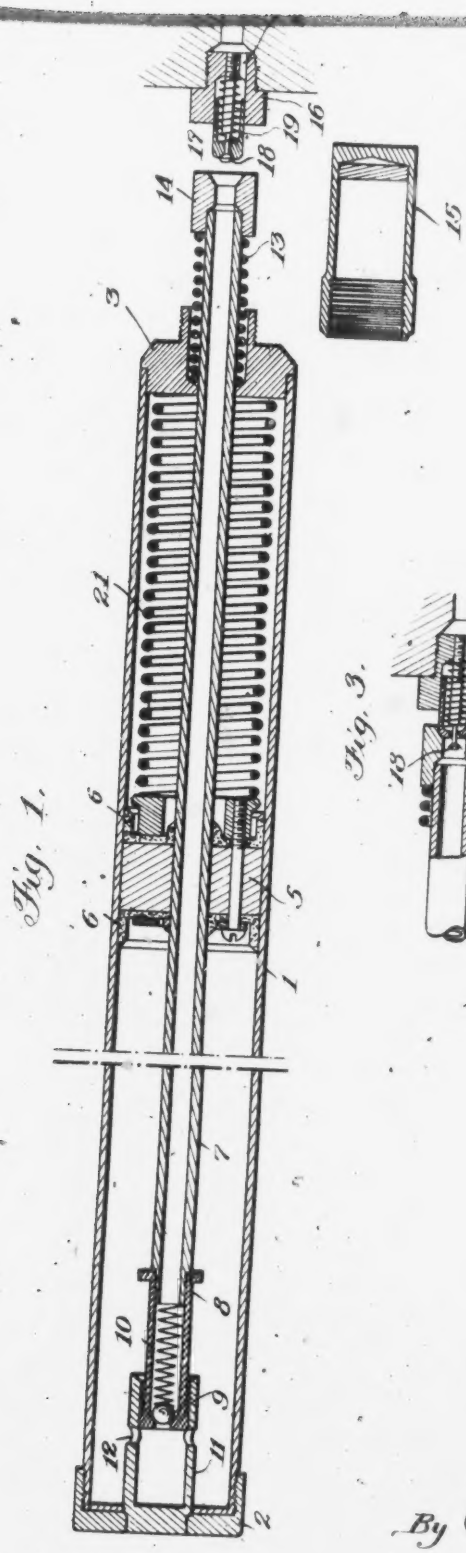

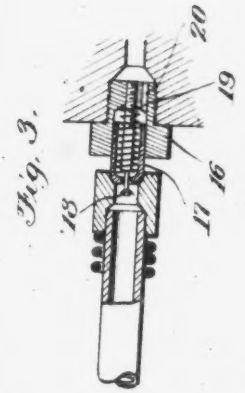

Inventor
Charles F. Wallace

By Pierce & Swart.
Attys

Reissued Nov. 22, 1927. Re. 16,787

UNITED STATES PATENT OFFICE.

CHARLES F. WALLACE, OF WESTFIELD, NEW JERSEY, ASSIGNOR TO THE BASSICK MANUFACTURING COMPANY, OF CHICAGO, ILLINOIS, A CORPORATION OF DELAWARE.

GREASE CONTAINER.

Original No. 1,494,652, dated May 20, 1924, Serial No. 528,422, filed January 11, 1922. Application for reissue filed October 8, 1925. Serial No. 61,380.

The invention for which by these presents I seek protection by Letters Patent of the United States, is an improvement in forced feed lubricating devices, more commonly known as grease guns, which in general may be described as means for applying under a certain pressure, the lubricant to such parts as the bearings of internal combustion engines and the like.

Usually such parts are lubricated by heavy oil or grease stored in permanent receptacles attached to the engine, or by means which require the removal of caps or other parts to permit access to the bearings, and by devices which are unhandy and more or less difficult to use or manipulate. My object has been, in the devising of the means hereinafter set forth, to produce a simple and thoroughly practicable device that will accomplish the desired results more quickly and easily than others heretofore intended or used for this purpose, and to this end my improvement comprises a cylinder containing a spring actuated piston and constituting the reservoir for a heavy oil or grease, and having a tube longitudinally movable therein against spring pressure provided with a grease pump at the rear end, and a discharge conical cavity at the forward end which is designed to fit over a specially designed connection attached to the part to be lubricated.

This device in the most practicable form in which I have produced it is illustrated in the accompanying drawing, in which

Figure 1 is a longitudinal section of the grease gun, showing detached therefrom a screw cap and the device connected to the part to be lubricated through which the [illegible] forced.

said piston and the head 3. The function of this spring is merely for the purpose of maintaining the piston in contact with the body of contained lubricant in order that the latter may be maintained at the rear end of the container in all positions of the latter. It does not have sufficient force to do more than this.

Extending entirely through the cylinder 1 is a tube 7, the piston 5 and the head 3 having suitable openings through them to permit its free passage. The rear end of the said tube carries a cap or extension 8 having a perforated closed end and containing a ball valve 9 seated on a spiral spring 10.

The cap 2 has a cylindrical extension 11 with ports 12, and fits snugly over the cap or extension 8.

At the forward end of the instrument a spiral spring 13 is interposed between a head 14 and the head 3, the said head 14 being screwed to the end of the tube 7. This head 14 forms the discharge end of the tube and is formed with a conical cavity. A screw cap 15 is used to close the tube 7 when the device is not in use, and this cap screws onto the extension 4.

With this device are used connections with the bearings or other parts to be lubricated consisting of plugs 16 hollowed out to receive a movable cup 17 and a plunger 18, with a head that normally closes the passage into the plug, and a spiral spring 19 that tends to keep the passage into the plug closed. These plugs are set or screwed into the stationary parts of the apparatus to be lubricated, and contain passages 20 leading to the bearings or other parts which are to receive the lubricant.

Original No. 1,494,652, dated May 20, 1924, Serial No. 528,422, filed January 11, 1922. Application for reissue filed October 8, 1925. Serial No. 61,380.

The invention for which by these presents I seek protection by Letters Patent of the United States, is an improvement in forced feed lubricating devices, more commonly known as grease guns, which in general may be described as means for applying under a certain pressure, the lubricant to such parts as the bearings of internal combustion engines and the like.

Usually such parts are lubricated by heavy oil or grease stored in permanent receptacles attached to the engine, or by means which require the removal of caps or other parts to permit access to the bearings, and by devices which are unhandy and more or less difficult to use or manipulate. My object has been, in the devising of the means hereinafter set forth, to produce a simple and thoroughly practicable device that will accomplish the desired results more quickly and easily than others heretofore intended or used for this purpose, and to this end my improvement comprises a cylinder containing a spring actuated piston and constituting the reservoir for a heavy oil or grease, and having a tube longitudinally movable therein against spring pressure provided with a grease pump at the rear end, and a discharge conical cavity at the forward end which is designed to fit over a specially designed connection attached to the part to be lubricated.

This device in the most practicable form in which I have produced it is illustrated in the accompanying drawing, in which

Figure 1 is a longitudinal section of the grease gun, showing detached therefrom a screw cap and the device connected to the part to be lubricated through which the grease is forced.

Figure 2 is a general view, mainly in elevation of the same device, the two caps being shown as detached.

Figure 3 is a sectional view of the discharge end of the gun in operative relation to the connection to the bearing or other part to be lubricated.

The main portion of the body of the instrument is a metal cylinder 1, threaded at its rear end to receive a cap 2, and having at its forward end a closing head 3 provided with a threaded extension 4. Within this cylinder is a piston 5 with double cap leathers 6 and a spiral spring 21 intermediate said piston and the head 3. The function of this spring is merely for the purpose of maintaining the piston in contact with the body of contained lubricant in order that the latter may be maintained at the rear end of the container in all positions of the latter. It does not have sufficient force to do more than this.

Extending entirely through the cylinder 1 is a tube 7, the piston 5 and the head 3 having suitable openings through them to permit its free passage. The rear end of the said tube carries a cap or extension 8 having a perforated closed end and containing a ball valve 9 seated on a spiral spring 10.

The cap 2 has a cylindrical extension 11 with ports 12, and fits snugly over the cap or extension 8.

At the forward end of the instrument a spiral spring 13 is interposed between a head 14 and the head 3, the said head 14 being screwed to the end of the tube 7. This head 14 forms the discharge end of the tube and is formed with a conical cavity. A screw cap 15 is used to close the tube 7 when the device is not in use, and this cap screws onto the extension 4.

With this device are used connections with the bearings or other parts to be lubricated consisting of plugs 16 hollowed out to receive a movable cup 17 and a plunger 18, with a head that normally closes the passage into the plug, and a spiral spring 19 that tends to keep the passage into the plug closed. These plugs are set or screwed into the stationary parts of the apparatus to be lubricated and contain passages 20 leading to the bearings or other parts which are to receive the lubricant.

The operation of the device is as follows: To fill the gun the cap 2 is removed and the heavy oil or grease is either drawn or packed in until the piston 5 is forced back to the limit of the possible compression of the spiral spring, when the cap 2 is replaced. The tube 7 may be drawn out of the forward end of the container engaging with the piston 5 and moving the same to create the motion that draws in the lubricant. The only function of the spring 21 is thereafter to keep the piston 5 firmly against the body of grease within the cylinder.

When lubricant is to be applied the cap 15

is removed and the conical cavity in the head 14 is placed over the rounded end of the cup of the plug 16. The cylinder 1 is then forced forward one or two times with the result that the parts 8 and 12, acting as a force pump when the rear end of the tube 7 is forced into the cylindrical extension 11, force grease through the tube 7 and thence through the opening in the cup 17, formed when said cup is forced back by the pressure applied to the cylinder 1.

When pressure on the cylinder ceases, the spring 13 compressed by such pressure withdraws the valve containing cap 8 from the hollow extension 11 and this draws in the grease from the cylinder 1 through the ports 12, and in this way a measured quantity of grease may be injected into and through the connections 14 at each stroke or forward movement of the device.

This device has many advantages. No fixed connections between the grease supply and the parts to be lubricated are necessary. The bearings or other parts are always closed to prevent access of dirt thereto. The rounded head of the connection and the conical cavity in the tube 7 constitute a ball and socket joint, thus permitting the device to be applied and used at widely varying angles, and the rounded top of the connection may be readily cleaned before applying the grease gun.

Broadly considered the plug connection by which the grease is introduced, is any device in which the pressure of the gun or the pressure of the grease in the gun opens the passage to the parts to be lubricated, and the connection illustrated is merely typical of such devices. It should further be pointed out that the area of the pump in the grease gun must be equal to or greater than the area of contact between the gun and the grease cup or connection as otherwise the grease would escape at the entrance at the end of the gun when pressure is applied to operate the pump.

By means of this device a considerable number of bearings or other parts may be lubricated in much shorter time than is now required for the proper use of any other device for a similar purpose of which I am

piston a suction that may be utilized for filling the container with lubricant when the cap is removed.

2. A forced feed lubricating device comprising in combination, a container for the lubricant, a longitudinally movable tube extending through the container, a force pump at the rear of the container operated by the reciprocatory movement of said tube, a piston through which said tube passes, and a spring acting on said piston with only sufficient force to maintain it in contact with the contained lubricant.

3. A forced feed lubricating device comprising in combination, a container for the lubricant and a spring-seated piston therein adapted by the force of its spring to be merely maintained in contact with the body of contained lubricant, a pump chamber containing side perforations attached to the rear end of the container, a longitudinally movable lubricant tube with a closed end extending through the container and forming with the pump chamber a piston tube, a valve in the closed end of said tube, and a spiral spring acting upon the tube and having sufficient force to restore the same after it has been forced back and thereby create in the pump a suction which fills it with lubricant.

4. A forced feed lubricating device comprising in combination, a cylindrical container, a reciprocatory tube extending through the same, and a force pump at the rear end of the container for which said tube constitutes the piston, said tube having a valve controlled orifice in its rear closed end, and a passage for lubricant in its forward end, the areas of the said passage and of the force pump chamber being different, for the purpose set forth.

5. A device of the kind described, comprising in combination, a cylindrical grease container, a piston therein, a spring acting upon said piston with only sufficient force to maintain it in contact with the contained lubricant, a hollow tube extending through the forward end of the container and the piston, a force pump connected with the rear end of the tube, which operates to force lubricant from the container through the tube when the latter is pushed back

When pressure on the cylinder ceases, the spring 13 compressed by such pressure withdraws the valve containing cap 8 from the hollow extension 11 and this draws in the grease from the cylinder 1 through the ports 12, and in this way a measured quantity of grease may be injected into and through the connections 14 at each stroke or forward movement of the device.

This device has many advantages. No fixed connections between the grease supply and the parts to be lubricated are necessary. The bearings or other parts are always closed to prevent access of dirt thereto. The rounded head of the connection and the conical cavity in the tube 7 constitute a ball and socket joint, thus permitting the device to be applied and used at widely varying angles, and the rounded top of the connection may be readily cleaned before applying the grease gun.

Broadly considered the plug connection by which the grease is introduced, is any device in which the pressure of the gun or the pressure of the grease in the gun opens the passage to the parts to be lubricated, and the connection illustrated is merely typical of such devices. It should further be pointed out that the area of the pump in the grease gun must be equal to or greater than the area of contact between the gun and the grease cup or connection as otherwise the grease would escape at the entrance at the end of the gun when pressure is applied to operate the pump.

By means of this device a considerable number of bearings or other parts may be lubricated in much shorter time than is now required for the proper use of any other device for a similar purpose of which I am aware.

Having now described my improvement of its mode of operation or use, what I claim is:—

1. A forced feed lubricating device comprising in combination, a container, a removable cap closing its rear end, a spring-actuated piston occupying the forward part of the container, a longitudinally movable tube extending through the container and the piston and having a projecting part that engages with and moves the piston when it is drawn forward and compresses the piston spring, thereby providing back of said [illegible] ficient force to maintain it in contact with the contained lubricant.

3. A forced feed lubricating device comprising in combination, a container for the lubricant and a spring-seated piston therein adapted by the force of its spring to be merely maintained in contact with the body of contained lubricant, a pump chamber containing side perforations attached to the rear end of the container, a longitudinally movable lubricant tube with a closed end extending through the container and forming with the pump chamber a piston tube, a valve in the closed end of said tube, and a spiral spring acting upon the tube and having sufficient force to restore the same after it has been forced back and thereby create in the pump a suction which fills it with lubricant.

4. A forced feed lubricating device comprising in combination, a cylindrical container, a reciprocatory tube extending through the same, and a force pump at the rear end of the container for which said tube constitutes the piston, said tube having a valve controlled orifice in its rear closed end, and a passage for lubricant in its forward end, the areas of the said passage and of the force pump chamber being different, for the purpose set forth.

5. A device of the kind described, comprising in combination, a cylindrical grease container, a piston therein, a spring acting upon said piston with only sufficient force to maintain it in contact with the contained lubricant, a hollow tube extending through the forward end of the container and the piston, a force pump connected with the rear end of the tube, which operates to force lubricant from the container through the tube when the latter is pushed back into the container and a spring acting upon said tube to withdraw it from its pushed back position therein.

6. A device of the kind described, comprising in combination, a cylindrical grease container, a cap for the rear end thereof having a hollow extension with ports in its side walls, a spring seated piston in the container, a spring acting upon said piston with only sufficient force to maintain it in contact with the contained lubricant, a reciprocatory tube extending longitudinally through the container and piston, and a valve control-

attachment at its end which enters the hollow extension in the cap, and forms therewith a pump to force lubricant from the container through the tube.

7. A lubricating system comprising a lubricant receiving member having a rounded head provided with a passageway for lubricant, and a compressor for supplying lubricant to said receiver comprising a container for lubricant, a discharge tube reciprocable with respect to said container and communicating with said container, means actuated by the reciprocation of said container with respect to said discharge tube for forcing lubricant under pressure through said discharge tube, means slidably mounted in said container for exerting pressure on the lubricant therein, and means carried by the outer end of said discharge tube for making sealed contact with said rounded head from any one of a plurality of angularly related positions, said last named means being actuated by the pressure exerted against said container toward said member, in reciprocating said container, to maintain a sealed connection with said rounded head.

8. A lubricating system comprising a lubricant receiving member having a head provided with a passageway for lubricant, and a compressor for supplying lubricant to said receiver, comprising a container for lubricant, a discharge tube reciprocable with respect to said container and communicating with said container, means actuated by the reciprocation of said container with respect to said discharge tube for forcing lubricant under pressure through said discharge tube, and means carried by the outer end of said discharge tube for making sealed contact with said head from any one of a plurality of angularly related positions, said last named means being actuated by the pressure exerted against said container toward said member, in reciprocating said container, to maintain a sealed connection with said head.

9. A lubricating system comprising a receptacle for receiving lubricant, said receptacle comprising a spherical head and a compressor comprising a container, means in said container for exerting pressure on the lubricant therein, a cylinder, a discharge tube communicating with said cylinder and terminating in a member having a depres-

10. A lubricating system comprising a lubricant receiving member having a passageway for lubricant, and a compressor for supplying lubricant to said receiver, comprising a container for lubricant, a discharge tube coaxial with, and reciprocable with respect to said container, means interposed between, and effecting communication between said container and said discharge tube for forcing lubricant under pressure through said discharge tube when said container is reciprocated relatively to said discharge tube, means for causing lubricant to pass from said container to said forcing means, and means carried by the outer end of said discharge tube for making sealed contact with said receiving member from any one of a plurality of different angularly related positions, said sealed contact being maintained by the pressure exerted in moving said container relatively to said discharge tube.

11. A lubricating system comprising a lubricant receiving member having a passageway for lubricant, and a compressor for supplying lubricant to said receiver, comprising a container for lubricant, a discharge tube reciprocable with respect to said container, means interposed between, and effecting communication between, said container and said discharge tube for forcing lubricant under pressure through said discharge tube when said container is reciprocated relatively to said discharge tube, means for causing lubricant to pass from said container to said forcing means, and means carried by the outer end of said discharge tube for making sealed contact with said receiving member from any one of a plurality of different angularly related positions, said sealed contact being maintained by the pressure exerted in moving said container relatively to said discharge tube.

12. A lubricant compressor comprising a container for lubricant, a cylinder communicating with said container, elements at opposite ends of said compressor for receiving oppositely directed thrusts, one of said elements having a passageway communicating with said cylinder, means actuated by a thrust imposed upon one of said elements, for discharging lubricant from said cylinder through said passageway, and means sur-

…, a discharge tube reciprocable with respect to said container and communicating with said container, means actuated by the reciprocation of said container with respect to said discharge tube for forcing lubricant under pressure through said discharge tube, means slidably mounted in said container for exerting pressure on the lubricant therein, and means carried by the outer end of said discharge tube for making sealed contact with said rounded head from any one of a plurality of angularly related positions, said last named means being actuated by the pressure exerted against said container toward said member, in reciprocating said container, to maintain a sealed connection with said rounded head.

8. A lubricating system comprising a lubricant receiving member having a head provided with a passageway for lubricant, and a compressor for supplying lubricant to said receiver, comprising a container for lubricant, a discharge tube reciprocable with respect to said container and communicating with said container, means actuated by the reciprocation of said container with respect to said discharge tube for forcing lubricant under pressure through said discharge tube, and means carried by the outer end of said discharge tube for making sealed contact with said head from any one of a plurality of angularly related positions, said last named means being actuated by the pressure exerted against said container toward said member, in reciprocating said container, to maintain a sealed connection with said head.

9. A lubricating system comprising a receptacle for receiving lubricant, said receptacle comprising a spherical head and a compressor comprising a container, means in said container for exerting pressure on the lubricant therein, a cylinder, a discharge tube communicating with said cylinder and terminating in a member having a depression, communicating with said discharge tube, for making sealed contact with said head from any one of a plurality of different angular positions, and means interposed between said cylinder and said tube for placing pressure, greater than the pressure in said container, upon the lubricant discharged through said tube, when a force is applied to said compressor in the direction of said fitting, said force being effective in maintaining a sealed connection between said discharge tube and said head.

lubricant under pressure through said discharge tube when said container is reciprocated relatively to said discharge tube, means for causing lubricant to pass from said container to said forcing means, and means carried by the outer end of said discharge tube for making sealed contact with said receiving member from any one of a plurality of different angularly related positions, said sealed contact being maintained by the pressure exerted in moving said container relatively to said discharge tube.

11. A lubricating system comprising a lubricant receiving member having a passageway for lubricant, and a compressor for supplying lubricant to said receiver, comprising a container for lubricant, a discharge tube reciprocable with respect to said container, means interposed between, and effecting communication between, said container and said discharge tube for forcing lubricant under pressure through said discharge tube when said container is reciprocated relatively to said discharge tube, means for causing lubricant to pass from said container to said forcing means, and means carried by the outer end of said discharge tube for making sealed contact with said receiving member from any one of a plurality of different angularly related positions, said sealed contact being maintained by the pressure exerted in moving said container relatively to said discharge tube.

12. A lubricant compressor comprising a container for lubricant, a cylinder communicating with said container, elements at opposite ends of said compressor for receiving oppositely directed thrusts, one of said elements having a passageway communicating with said cylinder, means actuated by a thrust imposed upon one of said elements, for discharging lubricant from said cylinder through said passageway, and means surrounding one of said elements, and movable with respect to said cylinder for pressing the lubricant in said container toward said cylinder.

13. A lubricant compressor comprising a container for lubricant, a cylinder communicating with said container, a discharge tube for said cylinder, and a piston in said container, movable with respect to and surrounding said tube, for causing lubricant to be displaced from said container into said cylinder.

14. A lubricant compressor comprising a

container for lubricant, a cylinder communicating with said container, means for displacing lubricant from said cylinder including a member in said container, and a piston, movable with respect to and surrounding said member, for displacing lubricant from said container into said cylinder.

15. A lubricant compressor comprising a cylindrical container, a pump cylinder of smaller diameter than said container and communicating with said container, said pump cylinder and container being coaxial, means, caused to act by a thrust exerted along the axis of said container, for discharging lubricant from said pump cylinder, said means acting as a valve to prevent return flow of lubricant to said container, means reciprocable with respect to said container for conducting lubricant from said pump cylinder, and piston means in said container for continuously pressing against the lubricant in said container.

16. A lubricating apparatus of the class described comprising in combination a nozzle having an outwardly flaring cavity and a fitting having a contacting surface to be embraced within the flaring cavity of the nozzle, said nozzle and fitting adapted to form a lubricant-tight connection in any one of a plurality of angularly different relationships and being formed to provide a circular line of contact in any angle within the range of their cooperability.

17. In lubricating apparatus of the class described a union comprising a conduit member communicating with a source of lubricant, said conduit member formed of non-compressible material and terminating in an end having a conical outwardly flaring cavity, a second conduit member formed of non-compressible material and having a spherical head adapted to be received in the cavity of said first conduit member, and means to press said first conduit member against said second conduit member in any one of a plurality of angular relationships to effect a lubricant-tight seal between said members.

In witness whereof, I hereunto subscribe my name, this 24 day of September, 1925.

CHARLES F. WALLACE.

CLA

This Drawing is a reproduction of the original size reduced scale.

A.D. 1904. MARCH 22. N.º 6940.

CLARKSON'S COMPLETE SPECIFICATION.

1 SHEET

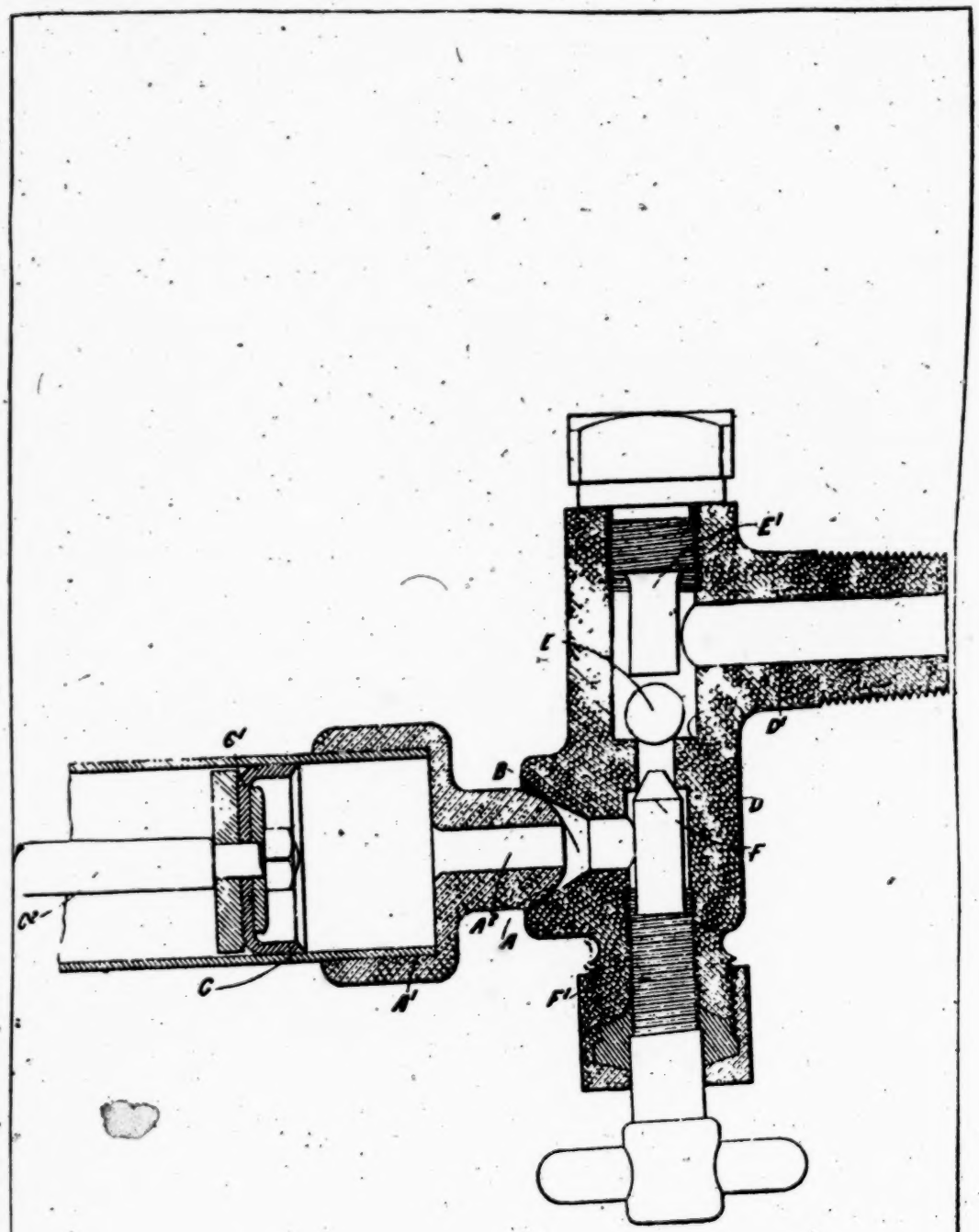

This Drawing is a reproduction of the original on a reduced scale.

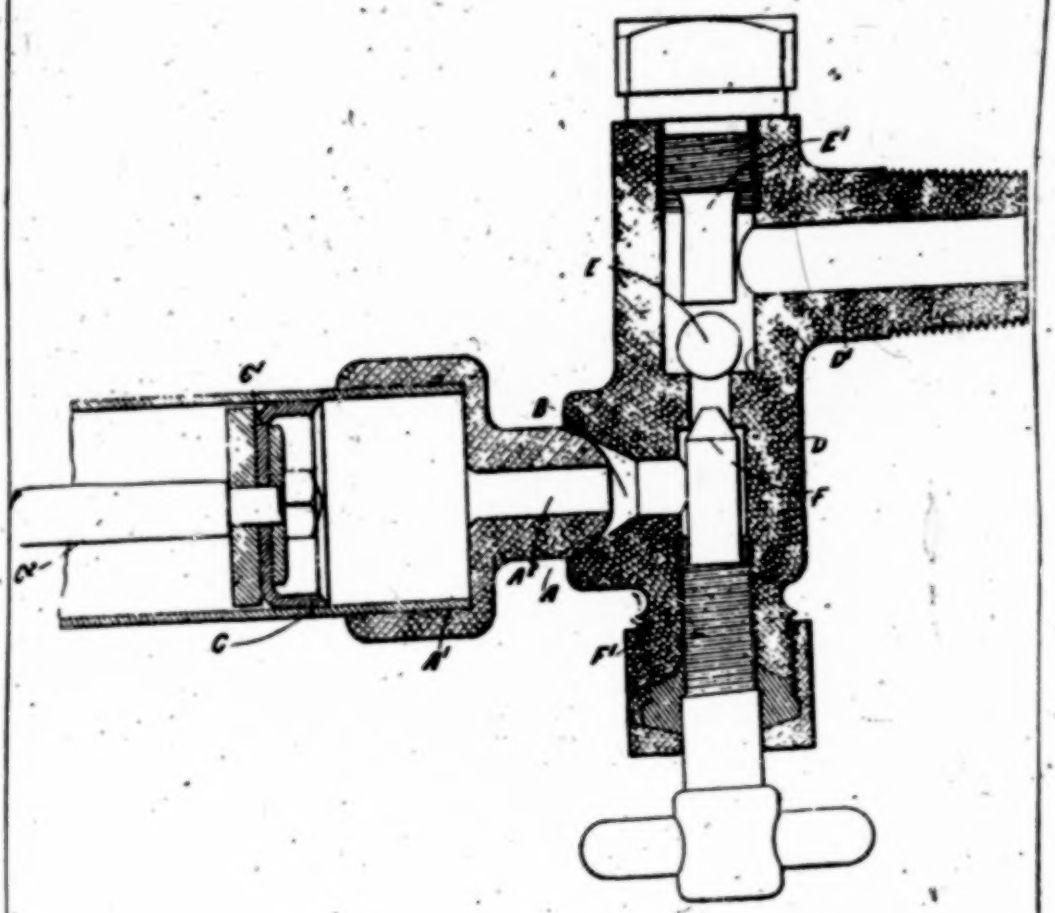

This Drawing is a reproduction of the original and reduced scale.

venient manner and the end part of the pump which rests in this recess may be attached to the end of the pump barrel in any suitable manner, or it may be integral with it.

Dated this 22nd day of March 1904.

THOMAS CLARKSON,
Boult, Wade & Kilburn,
Agents for the Applicant.

COMPLETE SPECIFICATION.

"Improvements in or relating to Temporary Joints for Pipes and the like."

I, Thomas Clarkson, Engineer, of Moulsham Works, Chelmsford, in the County of Essex, do hereby declare the nature of this invention and in what manner the same is to be performed to be particularly described and ascertained in and by the following statement:—

This invention relates to temporary joints between two pipes or conduits, such, for example, as connecting a hand or foot air pump with a pressure or storage tank, as employed on motor vehicles. Hitherto it has been usual to connect the pump to the valve or pipe connection on the tank by a rubber tube having a screw-threaded nut or union adapted to engage with a corresponding nozzle on the pipe. As oil has a deleterious effect on the rubber, these tubes constantly require renewal, and the screw-thread is apt to be destroyed or the cap wrenched off and the screw thread broken. It is the chief object of the present invention to obviate these disadvantages.

According to this invention the end of the valve or pipe connection on the tank is provided with a conical, conoidal or similarly shaped opening and on the end of the pump barrel or nozzle is fitted an end piece having preferably a hemispherical end which, when the parts are to be connected together to force air into the tank, rests in the opening in the end of the pipe on the tank and so forms a sufficiently tight joint to prevent leakage.

When the operator withdraws the plunger of the pump, there is then no pressure of air tending to escape from the tank, and the specially shaped end of the pump is merely held in the recess in the pipe. When, however, on the return stroke, the operator forces the plunger inward to expel the body of air in the pump and force it into the tank, the pressure which is exerted by the operator is transmitted by the air in the pump to the specially shaped end which is thus forced firmly into contact with the conical recess making an air-tight joint.

The valve connection on the pump is provided with the usual check valve to prevent the escape of air, so that the liability of air escaping at the joint only arises when the operator is forcing air from the pump into the tank, and the pressure exerted, as above described, is sufficient to avoid such leakage.

In addition to making a sufficiently tight joint, the formation of the pipe nozzle and the end part of the pump permits of a certain amount of flexibility in the connection, and in addition to being capable of instant application and detachment, the joint is not liable to wear out speedily, and there is no part of the connection that can be effected by the oil in the tank.

In addition to the check valve the connection on the tank is provided with a hand-operated valve, preferably a needle valve, which controls the air passage without depending on the check valve.

It is generally sufficient to form the tapering or conoidal recess integral with the valve connection, but it may be a separate part fixed to this in any con-

venient manner and the end part of the pump which rests in this recess may be attached to the end of the pump barrel in any suitable manner, or it may be integral with it.

Referring to the drawings wherein is shown in vertical section a joint constructed in accordance with this invention, one part of the joint is formed on a pump such as is used in motor cars for supplying air pressure to the petrol tank, the other part being constructed on the usual valve fitting or attachment on the tank.

In the example shown, the member having the semi-spherical portion A is attached to the pump while the conical member of the joint is formed on the valve attachment on the tank. The pump C is provided at its delivery end with a nozzle attachment A^1 having an outlet opening A^2 and on this member is formed the semi-spherical part A of the joint, the air being forced through the nozzle by the operation of the piston C^1 actuated by the rod C^2.

The conical recess B is formed at the inlet of the valve box D which is screwed into the tank at the part D^1; the passage in the valve box is automatically closed by a ball valve E and the opening of this valve is controlled by a screw cap having an extension E^1 as shown.

In addition to the check valve E there is provided the needle valve F which operates in the usual manner.

The joint A B, in addition to affording a fluid-tight joint, permits of a certain amount of flexibility so that the pump can be moved relatively to the valve box without causing injury to the parts, and as no screwing or the like is necessary, the connection can readily and quickly be made and the pump again detached when desired.

Having now particularly described and ascertained the nature of my said invention and in what manner the same is to be performed, I declare that what I claim is—

1. In a joint of the kind described the combination of a conical or conoidal recess on one part co-operating with a spherical projection on the other part.

2. The combination with the valve fitting of a fuel tank having a conical or conoidal inlet opening B of a hand operated air pump having a spherical nozzle A substantially as and for the purpose described.

Dated this 21st day of December, 1904.

BOULT, WADE & KILBURN,
Agents for the Applicant.

Redhill: Printed for His Majesty's Stationery Office, by Love & Malcomson, Ltd.—1905.

[fol. 532] IN UNITED STATES DISTRICT COURT

STATEMENT MADE BY JUDGE ANDERSON ON MAY 25, 1928, IN THE SUIT BROUGHT BY THE BASSICK MANUFACTURING COMPANY AGAINST THE R. M. HOLLINGSHEAD COMPANY IN THE DISTRICT COURT OF THE UNITED STATES, WESTERN DISTRICT OF TENNESSEE, WESTERN DIVISION

Judge Anderson: Mr. Williams, I have heard very full argument on this matter from all sides. I know just as much about this case now as I will ever know.

Now Judge Burch in regard to the defense of res adjudicata, I do not think there is anything in that, because the hearing in New Jersey was not on the merits.

As to the monopoly feature that has been stressed, that is interesting, but I do not think it has any proper place in this case. This is a matter for an anti-trust suit. If it is an effort on the part of this concern to monopolize the grease business and monopolize it in an unlawful manner, there is a proper proceeding. I do not think that has anything to do with the issues in a patent case.

I have been thinking since yesterday about the position taken by Judge Thacher in New York, but frankly I do not agree with him. I think the authorities are such that to say the least it does not incline me to disturb the line of opinions which have been laid down, and particularly by my own Circuit. So while I am interested in the argument and would like it to continue, I think I have got the matter before me and have given everybody an opportunity, and I see no necessity for writing an opinion, because it would add nothing to the mass of literature which has already been written on this subject. The opinion which will finally be rendered on this case necessarily will be written at Cincinnati, and written by a Court that is unusually expert in patent matters. I think though that the decision in the Lyman case binds the Court in this case. For that reason the temporary injunction may be made permanent. You may draw the decree.

[fol. 533] IN UNITED STATES DISTRICT COURT

DECREE—Entered May 25, 1928

This cause come on this day to be heard on the entire record herein and was argued by counsel and same having been considered by the court it is ordered, adjudged and decreed by the court as follows;

That the decree of dismissal (in the case of Bassick Manufacturing Company vs. Frank Miller Company, No. 2759 United States District Court, District of New Jersey) is not a decree on the merits in said cause and is, therefore, not a good defense or bar of this suit as res adjudicata.

That the report of the Standing Master on file herein be and the same is hereby in all respects confirmed.

That the temporary injunction hereinbefore issued be and the same is hereby made perpetual.

The- the cause be and it is hereby referred to the Standing Master to hear such evidence as may be offered by the parties and report therefrom what damages and/or profits if any, the plaintiff is entitled to recover because of the infringements of its patents by the defendant.

That the costs of this cause will abide the final decree to be made herein.

The defendants having prayed an appeal to the Circuit Court of Appeals for the Sixth Circuit, such appeal is hereby allowed upon the execution by defendants of bond with good and sufficient surety conditioned as required by law in the sum of $500.00.

The execution of the reference herein ordered will await the action of the appellate Court in the appeal herein allowed.

Enter.

H. B. Anderson, Judge.

[fol. 534] IN UNITED STATES DISTRICT COURT

ORDER DEFINING INJUNCTION—Filed June 23, 1928

Upon application of the defendant for a definition of the effect and scope of the injunction granted herein, it is ordered that said injunction prohibits the defendant from

selling and/or using a pump and hose of defendant's manufacture in connection with or attached to a genuine Alemite coupler of plaintiff's manufacture.

This order will be treated as part of the decree heretofore entered on May 25, 1928.

This 23rd day of June, 1928.

H. B. Anderson, Judge.

IN UNITED STATES DISTRICT COURT

INJUNCTION WRIT—Filed July 9, 1928

UNITED STATES OF AMERICA,
Western District of Tennessee,
Western Division, ss:

The President of The United States of America to the R. M. Hollingshead Company, Greeting:

Whereas; The Bassick Manufacturing Company, a citizen of Delaware, has filed on the equity side of the District Court of the United States for the Western District of Tennessee, Western Division, a bill of complaint against you, the said The R. M. Hollingshead Company, and has obtained an allowance for a perpetual injunction, as prayed for in the said bill and as set forth in the decree entered by the court;

Now, Therefore, we, having regard to the matters in the said bill contained, do hereby command and strictly enjoin and restrain you, the said The R. M. Hollinghshead Company, your officers, agents, employees, associates, and confederates, from making, using, and/or selling any of [fol. 535] the forms or parts of the lubricating apparatus referred to in the decree of the court and particularly:

(a) Compressors of the type exemplified in Exhibit A of the affidavit of D. A. Beezley of April 12, 1926.

(b) Compressors of the handy shop type exemplified in Exhibit A of the affidavit of O. A. Cumming of September 13, 1926, and illustrated in the drawing Exhibit K of the affidavit of Ernest W. Davis of October 21, 1926.

(c) Couplers of the type exemplified in Exhibit A submitted with the affidavit of D. A. Beezley of April 12, 1926,

and illustrated in the drawing Exhibit J of the affidavit of Ernest W. Davis of October 21, 1926.

(d) Couplers of the type exemplified in Exhibit A of the affidavit of O. A. Cumming of September 13, 1926, and as illustrated in the drawing Exhibit K of the affidavit of Ernest W. Davis of October 21, 1926.

(e) Compressors and couplers of the Rogers type having a key hole slot and stepped cam member and sealing gasket exemplified in defendant's Exhibit A and illustrated in defendant's Exhibit chart No. 1 submitted to the Master appointed by the court herein.

(f) Compressors and defendant's proposed coupler of the type having a screw operated and leather faced sealing member adapted for advancement and retraction within a hollow bayonet slotted coupling member, exemplified in defendant's Exhibit B and as illustrated in defendant's Exhibit chart No. 2 submitted to the Master appointed by the court herein.

(g) Compressors and couplers of the Larkin type having a screw threaded and leather faced sealing member adapted for advancement and retraction within a hollow bayonet slotted coupling member, exemplified in defendant's Exhibit F, and as illustrated in defendant's Exhibit chart No. 3 submitted to the Master appointed by the court herein.

(h) Lubricant compressors and Zerk adapters of the type exemplified in Exhibit A of the affidavit of O. A. Cumming of September 13, 1926.

And/or any other device or devices embodying the inventions described and claimed in claims 1, 2, 3, 4, 5, 6, 8, 14 and/or 15 of Gullborg patent No. 1,307,734, and/or claims 2, 3 and/or 5 of Zerk patent No. 1,475,980 and/or any of the parts thereof, and/or any other device or devices adapted for use in systems or combinations embodying the same, either for original equipment or for replacement under the guise of "repairs" or otherwise, and from offering or advertising so to do, and from aiding or abetting or in any way contributing to the infringement of the said [fol. 536] claims of the said patents, or either of them.

Which commands and injunctions you are respectfully required to observe and obey until our said District Court shall make further order in the premises.

Wherein, fail not under the penalty of the law thence ensuing.

Witness the Honorable Harry B. Anderson, Judge of the District Court of the United States, this 5th day of July, A. D. 1928, and of the independence of the United States of America the 152nd year.

A. G. Mathews, Clerk, United States District Court, by W. L. McKinney, Chief Deputy Clerk, U. S. District Court W. D. T., Memphis, Tenn.

Marshall's Return

This writ came to hand at Memphis, Tennessee, and same was executed as herein commanded by reading to and leaving a copy of same with the within R. M. Hollingshead Company (L. B. Shipp, President of said company accepted service for said company).

This the 5th day of July, 1928, Memphis, Shelby County, Tennessee.

Arthur Rogers, U. S. Marshal, by W. R. Wright, Deputy Marshal.

7-5-28.

St. car fare in serving, 14 cents.

[fol. 537] In United States District Court

Petition for Appeal—Filed June 23, 1928

To the Honorable Harry B. Anderson, District Judge:

The above named The R. M. Hollingshead Company feeling aggrieved by the decree rendered and entered in the above entitled cause on the 25th day of May, 1928 and the further decree of June 23, 1928, does hereby appeal from said decrees to the Circuit Court of Appeals for the Sixth Circuit for the reasons set forth in the assignment of errors filed herein and it prays that its appeal be allowed and that citation be issued as provided by law, and that a transcript of the record proceedings and documents, and the exhibits, upon which said decree was based, duly authenticated, be

sent to the United States Circuit Court of Appeals for the 6th Circuit, sitting at Cincinnati, Ohio, under the rules of said court in such cases made and provided.

And your petitioner prays that the proper order relating to the required security to be required of it be made.

The R. M. Hollingshead Company, by Weidersheim & Fairbanks, Burch, Minor & McKay, Jno. B. Keeble, Solicitors.

Appeal allowed as prayed for upon bond being given as required by law for the sum of $500.00. This 23rd day of June, 1928.

H. B. Anderson, Judge.

IN UNITED STATES DISTRICT COURT

ASSIGNMENT OF ERRORS—Filed June 23, 1928

Now comes the defendant in the above entitled case, The R. M. Hollingshead Co., and says that in the record, proceedings and decree of this Court entered in the above [fol. 538] entitled cause on May 25th, 1928 there is manifest error in this, to-wit:

1. The Court erred in sustaining the bill of complaint and ordering a decree in conformity to the prayers of the bill.

2. The Court erred in entering the said decree of May 25th, 1928.

3. The Court erred in holding claims 1, 2, 3, 4, 5, 6 and 8 of Gullborg Patent No. 1,307,734 valid.

4. The Court erred in holding claims 14 and 15 of the Gullborg Patent No. 1,307,734 valid.

5. The Court erred in holding that defendant's manufacture, sale and/or use of grease dispensing pumps or compressors equipped with bayonet type of conduit couplers of the type and character illustrated in Plaintiff's Exhibit "K" accompanying the affidavit of Ernest W. Davis, and also exemplified in Defendant's Exhibits Nos. 6-C and 8-C, constitutes either direct infringement and/or contributory

infringement of claims 1, 2, 3, 4, 5, 6, 8, 14 and/or 15 of the Gullborg Patent No. 1,307,734.

6. The Court erred in holding in confirmation of the Master's report and in overruling defendant's exceptions thereto, that the manufacture, sale and/or use by defendant of grease dispensing pumps or compressors equipped with bayonet type of conduit couplers of the type and character exemplified by Defendant's Exhibits "A", "B" and "F" before the Master, constitutes contributory infringement of claims 14 and/or 15 of the Gullborg Patent No. 1,307,734.

7. The Court erred in holding claims 2, 3 and 5 of the Zerk Patent No. 1,475,980 valid.

8. The Court erred in holding that the defendant's manufacture, sale and/or use of grease dispensing pumps or compressors equipped with cone type of contact nozzles or discharge orifices of the type exemplified by Defendant's Exhibit No. 45, constitutes contributory infringement of claims 2, 3 and/or 5 of the Zerk Patent No. 1,475,980.

9. The Court erred in enjoining the defendant from making, selling and/or using any old and unpatented device adapted for use in systems or combinations embodying the invention of the Gullborg Patent No. 1,307,734 and/or the invention of the Zerk Patent No. 1,475,980 and manufactured by the plaintiff.

10. The Court erred in holding that the manufacture, sale and/or use of any old and unpatented grease dispensing pump or compressor having any old and unpatented bayonet type of conduit coupler thereon for connection [fol. 539] with grease cups manufactured and sold by plaintiff according to the Gullborg Patent No. 1,307,733, constitutes contributory infringement of claims 14 and 15 of the Gullborg Patent No. 1,307,734.

11. The Court erred in holding that the manufacture, sale and/or use of any old and unpatented grease dispensing pump or compressor having any old and unpatented contact type of discharge nozzle thereon for connection with certain unpatented grease cups of the general type disclosed in Figure 3 of Zerk Patent No. 1,475,980, manufactured and sold by plaintiff, constitutes contributory infringement of claims 2, 3 and 5 of the Zerk Patent No. 1,475,980.

12. The Court erred in not adjudging plaintiff to have violated the spirit, intent and terms of the Clayton Act (38 Stat. 731; U. S. Comp. Stat., Sec. 8835c).

13. The Court erred in enjoining the defendant from selling any old and unpatented pump and hose for the purpose of dispensing grease, equipped with the bayonet type of coupler manufactured and sold by the plaintiff according to the Gullborg Patent No. 1,307,734 in suit, and which plaintiff's product defendant purchased on the open market, contrary to the recommendation implied in the Master's report, ordered approved, to-wit:

"I am further ready to agree with the concluding paragraph of the reply brief that it is no infringement to furnish a 'compressor' minus a 'coupler,' in other words, the pump and hose elements adapted to receive a Gullborg alemite coupler of plaintiff's manufacture. These two devices are public property; * * *."

14. The Court erred in holding and adjudging that the final decree of dismissal in the case of Bassick Manufacturing Company vs. Frank Miller Company, No. 2759 United States District Court, District of New Jersey, was not a decree on the merits or a final decree in said New Jersey cause, and that said final decree of dismissal was therefore not a good defense or bar in this Court as res judicata.

15. The Court erred in finding the equities to be with the plaintiff and in awarding it an injunction, accounting and costs as prayed for in the bill.

16. The Court erred in making perpetual the temporary injunction heretofore granted herein.

17. The Court erred in decreeing that defendant be enjoined from issuing and/or selling defendant's pump and [fol. 540] hose in connection with or attached to a genuine Alemite coupler of plaintiff's manufacture.

Wherefore, and for the diverse other errors in the record, proceedings and decree of the Court in this cause appearing, said defendant prays that the decree entered herein on the 25th day of May, 1928, be reversed.

Leonard L. Kalish, E. Hayward Fairbanks, Counsel for Defendant-Appellant.

IN UNITED STATES DISTRICT COURT

ORDER FOR APPEAL—Filed April 20, 1927

Now comes the defendant, the R. M. Hollingshead Company, and prays the Court to be allowed to appeal from the order granting a preliminary injunction made in this cause on the 21st day of March, 1927, and asks that the Court fix the amount of bond to be given by the defendant, and also to fix the time in which the transcript of the record shall be prepared by and presented to the Court, together with assignments of error.

And thereupon, the Court having considered the application of the defendant, the defendant is allowed to appeal from the order granting a preliminary injunction, entered March 21st, 1927, upon giving an appeal bond in the sum of $1,000.00, with security to be approved by the Clerk.

Thirty days allowed for the preparation of the record and for filing assignments of error.

All of which is ordered, adjudged and decreed this 20th day of April, 1927.

To all of which the plaintiff excepts.

H. B. Anderson.

[fol. 541] Bond on Appeal for $500.00, approved and filed June 23, 1928, omitted in printing.

[fol. 542] Citation in usual form omitted in printing.

[fol. 543] IN UNITED STATES DISTRICT COURT

PLAINTIFF'S PETITION FOR CROSS APPEAL—Filed June 23, 1928

To the Honorable Harry B. Anderson, United States District Judge:

The above named plaintiff, The Bassick Manufacturing Company, conceiving itself aggrieved by the decree entered in the above entitled cause on the 25th day of May 1928, does hereby appeal from the said decree to the United States Circuit Court of Appeals for the Sixth Circuit, for

the reasons specified in the Assignment of Errors filed herein and herewith; and it prays that this appeal may be allowed and that a citation issue as provided by law and that a transcript of the record, proceedings, papers and exhibits upon which said decree was made and passed, duly authenticated, may be sent to the United States Circuit Court of Appeals for the Sixth Circuit.

The Bassick Manufacturing Company, by Lowell W. Taylor, Williams, Bradbury, McCaleb & Hinkle, Solicitors and Counsel.

IN UNITED STATES DISTRICT COURT

[Title omitted]

ASSIGNMENT OF ERRORS—Filed June 23, 1928

Now comes The Bassick Manufacturing Company, the [fol. 544] plaintiff in the above entitled cause, by its solicitors and counsel, and he[illegible]des the following Assignment of Errors upon which it [illegible] rely, and says that the decree entered and filed herein on the 25th day of May 1928, is erroneous and unjust and against the just rights of the plaintiff, for the following reasons, viz:

(1) The court erred in confirming the report of the Standing Master herein insofar as it states in paragraph 4 of Part V that:

"This device (the Exhibit F coupler submitted by the defendant) is identical in structural characteristics with the other two couplers submitted and should be classed as a solid gasket' and 'screw-thread union.' "

The phrases thus quoted by the master are taken from the opinion of the Sixth Circuit Court of Appeals in Lyman v. Bassick and the allied cases referred to in the master's report. The "solid gasket" and "screw-thread union" referred to in the said opinion of the Sixth Circuit Court of Appeals was exemplified by plaintiff's Exhibits No. 107, No. 112 and No. 126 in the case of The Bassick Manufacturing Company v. The O. K. Manufacturing Company and was and is of a class having quite different structural characteristics than the Exhibit F or other

couplers submitted by the defendant herein. The "screw-thread" and "gasket union" to which the opinion of the Sixth Circuit Court of Appeals referred saying that "one of the defendants tried to (use it) but gave it up, and adopted the secondary sliding element giving the automatically adjustable intensive seal" was, as shown by the aforesaid Exhibits, of a kind in which the fitting was externally screw threaded and in which the coupler was interiorly screw threaded so that the coupler was attached to the fitting by screwing the female threads of the coupler over the male threads of the fitting. It was this construction which the opinion of the Court of Appeals referred to as "a screw-thread and gasket union" and which one of the defendants tried to use but gave it up and adopted the secondary sliding element which gives the automatically adjustable intensive seal.

The same error underlies and is incorporated in the following statement appearing on page 39 of the master's report:

"The coupler referred to was of the 'screw-thread and [fol. 545] gasket union' type, identical, or at least similar to the type of coupler introduced before me. And I may add that I have so considered it throughout the entire hearing and this report. I do not think that counsel for plaintiff is justified on the record of that case, so far as pointed out to me by counsel and examined, in seeking to differentiate the coupler devices introduced before me. Of course, the coupler is not physically exhibited, nor have counsel pointed out an illustration of it, but I hold that the reference of Judge Denison was to a coupler device at least similar in principle to that exhibited herein."

(2) The court erred in confirming the report of the Standing Master herein insofar as it states in paragraph 4 of Part VI:

"In the opinion of Judge Denison the patentable novelty of Gullborg's patent form of pin fitting was held to be that the pin which furnished bearings for the slot was made to pass through the fitting and furnish an abutment for the valve closing spring; that it is only that complete combination that can be patentable."

whereas, the statement of the opinion of the Sixth Circuit Court of Appeals was:

"We see no reason for denying the patentable novelty of Gullborg's particular form of fitting, by reason of which it has come to be called a pin fitting, and by which the same pin which furnished bearings for the slot was made to pass through the fitting and furnish an abutment for the valve closing spring; but it is only this complete combination that can be patentable; when the pin becomes mere arms projecting from each side, and the spring abutment is otherwise furnished, we have only the already common bayonet joint member."

(3) The court erred in approving the report of the Standing Master herein insofar as it says in paragraph 5 of Part VI, relative to defendant's Exhibit C fitting and to the fitting of the Gullborg patent in suit, that:

"The functions performed by the two are identical and they are equivalent. In view of the fact, however, [fol. 546] that the Gullborg patent has been limited to the use of the transverse pin as the spring abutment I find, as a matter of fact, that defendant's Exhibit C is not an infringement of the Gullborg patent,"

whereas, the Gullborg patent was not and has not been limited to the use of the transverse pin as the spring abutment. Furthermore, the defendant's Exhibit C fitting is, as stated in the above quoted portion of the master's report, an equivalent and performs identical functions. It is, therefore, an infringement at least in the sense employed by the master in stating his conclusion that "defendant's Exhibit 'C' is not an infringement of the Gullborg patent."

(4) The court erred in approving the report of the Standing Master herein insofar as the master states in paragraph 4 of part XIX that:

"I am ready to agree that so construed a very broad, in fact much too broad, scope is given, in my opinion, to claims 14 and 15,"

whereas, the construction referred to as required by the rule of law enunciated by the United States Supreme Court in Leeds & Catlin v. Victor, 213 U. S. 301, and by the Sixth Circuit Court of Appeals in Lyman v. Bassick, 18 Fed. (2) 29, does not give too broad a scope to claims 14 and 15 of Gullborg Patent 1,307,734.

(5) That the court erred in failing to disapprove the report of the Standing Master insofar as the parts upon which error is assigned in paragraphs 1, 2, 3 and 4 herein are concerned.

(6) That the court erred in decreeing that the costs of this cause abide the final decree to be made herein.

(7) That the court erred in failing and refusing to award the costs to the plaintiff and against the defendant.

Williams, Bradbury, MacCaleb & Hinkle, Solicitors and Counsel for The Bassick Manufacturing Company.

[fol. 547] IN UNITED STATES DISTRICT COURT

ORDER ALLOWING CROSS APPEAL—Filed June 23, 1928

This day came the parties by their solicitors and counsel, and, on motion of the solicitors and counsel for The Bassick Manufacturing Company, plaintiff, it is

Ordered as follows: That a cross appeal, to the United States Circuit Court of Appeals for the Sixth Circuit, from the decree of this court entered and filed herein on May 25, 1928 be and the same is hereby allowed, and that a citation issue as provided by law, and that so much of the transcript of record herein as is necessary and essential to a proper presentation thereof be forthwith transmitted to the said United States Circuit Court of Appeals, and it is further

Ordered, that the bond on appeal be fixed in the sum of Two Hundred and Fifty Dollars ($250.00).

H. B. Anderson, United States District Judge.

Bond on cross appeal for $250.00, approved and filed June 23, 1928, omitted in printing.

[fol. 548] Citation in usual form showing service on Chas. W. Burch, filed June 23, 1928, omitted in printing.

[fol. 549] IN UNITED STATES DISTRICT COURT

Orders Extending Time

ORDER—Filed June 23, 1928

Came the parties by their solicitors and defendant filed its petition for appeal, its assignment of errors, appeal bond and citation, whereupon said appeal is allowed and said appeal bond approved by the court and said citation signed by the Judge of the Court and accepted by the solicitor for plaintiff.

Upon application by the defendant the time for the preparation and settling the record on appeal and complying with General Equity Rule 75 and Rule 15 of the Sixth Circuit is extended for 60 days from this date.

This 23rd day of June, 1928.

H. B. Anderson, Judge.

[fol. 550] ORDER—Filed July 30, 1928

In this cause upon application of the defendant it is ordered that the defendant may have until September 8, 1928, to file its præcipe.

Enter. H. B. Anderson, Judge.

O.K.: Chas W. Burch, for Deft. Lowell W. Taylor for Plff.

ORDER—Filed Aug. 28, 1928

In this cause upon application by the defendant the time for the preparation and settling of the record on appeal, for filing the condensed record on appeal and complying with General Equity Rule No. 75 and Rule 15 of the United States Circuit, is extended for thirty (30) days from this date.

Ordered this August 24, 1928.

H. B. Anderson, Judge.

O. K.: Lowell W. Taylor, for Plaintiff. Minor, for Deft.

[fol. 551] ORDER—Filed Oct. 17, 1928

In this cause for good and sufficient reasons to the court appearing, it is ordered that the time for preparation and

settling of the record on appeal for filing præcipe or supplemental præcipe, for filing condensed record on appeal and for complying with General Equity Rule No. 75 and Rule 15 of United States Circuit Court of Appeals for the 6th Circuit, is extended to November 20, 1928.

It is further ordered that this order is entered nunc pro tunc as of September 22, 1928, and that the provisions hereof shall inure to the benefit of both the plaintiff and the defendant.

Enter.

H. B. Anderson, Judge.

Minor, for Deft. Lowell Taylor, for Plff.

ORDER—Filed Nov. 16, 1928

In this cause for good and sufficient reasons to the Court appearing, it is ordered by the court that the time for preparation and settling of the record on appeal for filing præcipes or supplemental præcipes, for filing condensed record on appeal and for complying with General Equity Rule No. 75 and Rule 15 of the United States Circuit Court of Appeals for the Sixth Circuit, is extended to December 20, 1928.

It is further ordered that the provisions of his order shall inure to the benefit of both plaintiff and defendant.

H. B. Anderson, Judge.

[fol. 552] IN UNITED STATES DISTRICT COURT

ORDER FILING TRANSCRIPT OF EVIDENCE—Filed Nov. 17, 1928

It appearing to the court that on the trial of this cause there was no official court reporter appointed by the court as provided for in Federal Equity Rule No. 50, but it further appearing to the court that the evidence offered and proceedings had were reported and a transcript of the same being today presented to the court and having been examined and found to be correct:

It is therefore ordered, adjudged and decreed that said transcript of the evidence offered and the proceedings had in the trial of this cause on the dates indicated in said transcript be and the same is hereby ordered to be filed in the Clerk's Office for the use of either party to said cause.

Enter.

H. B. Anderson, Judge.

IN UNITED STATES DISTRICT COURT

ORDER RE FILING OF PRÆCIPES—Filed Nov. 27, 1928

This cause having come on to be heard upon application for leave to file plaintiff's supplemental præcipe for the record on appeal and cross appeal, a præcipe for transcript of record on cross appeal having been filed by the plaintiff on July 23, 1928, and a præcipe for transcript of record on appeal having been filed by defendant on September 22, 1928, plaintiff's proposed supplemental præcipe withdrawing the præcipe originally filed by it on July 23, 1928, and adopting the defendant's præcipe filed September 22, 1928, it is

Ordered: That plaintiff have leave to file the accompanying plaintiff's supplemental præcipe instanter and the said defendant's præcipe and plaintiff's supplemental præcipe are approved as setting forth the evidence upon which the decree of the court dated May 25, 1928, was entered and [fol. 553] from which the appeal and cross appeal now pending was taken.

It is further ordered that the original copies of papers and exhibits enumerated in the defendant's præcipe and the plaintiff's supplemental præcipe may be transmitted to the clerk of the court of appeals for the sixth circuit for printing.

H. B. Anderson, United States District Judge.

IN UNITED STATES DISTRICT COURT

PRÆCIPE FOR TRANSCRIPT OF RECORD ON APPEAL—Filed Sept. 22, 1928

To the Clerk of the said Court:

Please prepare a transcript of the record in the above entitled cause, to be filed in the United States Circuit Court of Appeals for the Sixth Circuit, pursuant to an appeal allowed the defendant in the above cause and a cross appeal allowed the plaintiff in the same cause, and to include in such transcript of record the following papers, pleadings, depositions, documents and exhibits.

It is requested that the record on appeal consist of the following items, certain of them to be printed and others to be certified as physical exhibits as indicated:

To be printed:

1. Bill of Complaint.
2. Defendant's Answer.
3. Amended Bill of Complaint.
4. Defendant's Answer to Amended Bill of Complaint.

Parts of Plaintiff's Record on Final Hearing

5. Affidavit of D. A. Beezley executed April 12, 1926, together with paper exhibits comprising:
   Exhibit "B"—Order.
   Exhibit "C"—Invoice.

[fol. 554] Exhibit "D"—Delivery Ticket.

6. Affidavit of O. A. Cumming, executed September 13, 1926, together with
   Exhibit "B"—Instruction Sheet.
   Exhibit "C"—Invoice.
7. Order of court allowing defendant leave to amend its answer.
8. Amendment to answer filed by defendant.
9. Order for preliminary injunction, entered March 21, 1927.
10. Order modifying preliminary injunction order, entered April 20, 1927.
11. Petition of defendant for leave to use new devices for couplers on grease gun and pin fittings in lieu of coupler and pin fittings claimed to infringe Alemite fittings and coupler used by plaintiff.
12. Order of Reference to Master, entered April 20, 1927.
13. Supplemental petition of defendant for leave to use new devices for couplers on grease gun and pin fittings in lieu of coupler and pin fittings claimed to infringe Alemite fittings and coupler used by plaintiff.
14. Writ of injunction served on defendant by the Marshal's office.
15. Report of Standing Master.

16. Plaintiff's exceptions to the report filed October 15, 1927, by the Standing Master on Order of Reference of April 20, 1927.
17. Defendant's exceptions to the Master's report filed October 15, 1927.
18. Amendment to answer filed on or about April 21, 1928.
19. Defendant's motion to dismiss Bill of Complaint, together with the affidavit of Charles F. Lynch in support thereof, and certified copies filed therewith of certain portions of the record and proceedings in the cause of The Bassick Manufacturing Company vs. Frank Miller Co., Equity No. 2759, in the United States District Court, District of New Jersey.
20. Stipulated testimony of J. E. Otis, Jr. and the following exhibits offered in connection therewith:

Exhibit "I"—Drawing of Alemite and various infringing constructions,
Exhibit "I"—Drawing of O. K. rubber gasket and screw type and rubber gasket couplers,
Exhibit "J"—Petition for rehearing Larkin and O. K. Cases,

[fol. 555] Exhibit "K"—Supplemental petition for rehearing Larkin and O. K. Cases,
Exhibit "L"—Petition to Supreme Court for certiorari in Larkin and O. K. cases,
Exhibit "M"—Drawing of Larkin compressor, coupler and pin fitting involved in Larkin-Chicago case,
Exhibit "O-3"—Drawing of Larkin coupler,
Exhibit "O-4"—Drawing of Larkin coupler,
Exhibit "O-6"—Drawing of Larkin coupler submitted by Sawitoski and referred to in order of May 27, 1927,
Exhibit "Q"—Drawing of lubricant compressor of type involved in Motor Parts Station case,
Exhibit "AA"—Photograph of White Company grease ejector,
Exhibit "BB"—Drawing of White Company grease ejector and shackle bolt.

21. Condensed statement of evidence of defendant's following named witnesses, produced by depositions taken under R. S. 863, and notice of taking of depositions:

Hugo C. Gibson,
Clifford L. Jones,
Louis Nucho,
Roderick N. Smith,
Harold A. Southgate,
Clifford L. Jones.

22. Condensed statement of evidence, produced at the trial, covering the testimony of the following witnesses:

For Plaintiff

John M. McGreggor,
Albin C. Ahlberg,
O. A. Cummings.

For Defendant

L. B. Shipp.

23. Plaintiff's exhibits offered at the trial as follows:

Exhibit 2—Affidavits dated Feb. 27, 1927, filed by the defendant in the case of Bassick vs. Frank Miller in opposition to plaintiff's motion to dismiss without prejudice.

Exhibit 4—Certified copy of disclaimer of Claim 12 of Gullborg 1,307,734.

Exhibit 15—Exhibit "J" drawing Davis affidavit,

[fol. 556] Exhibit 16—Exhibit "K' drawing Davis affidavit,

Exhibit 20—Certain proceedings and papers in the case of Bassick vs. Frank Miller, including:

Plaintiff's motion for an Order explaining and supplementing the Order of Feb. 28, 1928,

Notice of said motion acknowledged May 12, 1928,

Memorandum of the Court filed May 22, 1928,

Plaintiff's petition for appeal,

Order allowing appeal,

Assignment of Errors.

Patents In Suit

24. Arthur V. Gullborg, No. 1,307,734, June 24, 1919.
25. Oscar Zerk, No. 1,475,980, Dec. 4, 1923.

Patents, Publications, Drawings and Documentary Exhibits Offered by Defendant with Respect to Gullborg Patent in Suit

27. Sholder, No. 242,564, June 7, 1881.
28. Stedman, No. 456,295, July 21, 1891.
29. Lees, No. 610,359, Sept. 6, 1898.
30. Barcus, No. 1,117,762, Nov. 27, 1914.
31. Winkley, No. 1,201,414, Oct. 17, 1916.
32. Winkley (Reissue), No. 14,667, June 10, 1919.
33. Gullborg, No. 1,307,733, June 24, 1919.
34. Seng, No. 1,322,357, Nov. 18, 1919.
35. Murphy, No. 1,637,326, July 26, 1927.
36. Seng (British), No. 3,028, Feb. 24, 1915.
37. Alley (British), No. 21,893, 1906.
38. Grey (British), No. 18,727, 1912.
39. Sharpe (British), No. 26,134, of 1912.
40. Seng (French), No. 20,083.
41. Translation of French Seng patent No. 20,083 (being defendant's Exhibit No. 32).
42. Seng (French), No. 468,869.
43. French publication in the magazine "Omnia" of April 25, 1914.
44. Translation of the French publication "Omnia" (being defendant's Exhibit No. 22).
45. Drawing of defendant's coupler (being defendant's Exhibit No. 9).
46. Drawing of vacuum testing apparatus (being defendant's Exhibit 10).

[fol. 557] 47. Drawing of reduced Barcus model coupler (being defendant's exhibit 15).

48. Drawing of Alley's device (being defendant's exhibit No. 19).
49. Drawing of Seng's devices of the British, French and U. S. Seng patents and the Seng publication in Omnia, (being defendant's Exhibit No. 35).
50. Drawing of O. K. Screw type coupler and hose (being defendant's exhibit No. 58).

51. Sales receipt of Alemite Lubricator Co. for one set of Alemite pin fittings or grease cups for 1925. Essex automobile (being defendant's exhibit No. 59).
52. Invoice of Dot Lubricator Co. for Dot adapters sold to Hollingshead Co. (being defendant's exhibit No. 65).
53. Invoice of Dot Lubricator Co. for Dot adapters sold to Hollingshead Co. (being defendant's exhibit No. 66).
54. Invoice of Alemite Lubricator Co. for 500 pin fittings or grease cups sold to the Hollingshead Co. (being defendant's exhibit No. 67-A).
55. Invoice of Alemite Lubricator Co. for 100 Alemite pin fittings or grease cups sold to the Hollingshead Co. (being defendant's exhibit No. 67-B).
56. Cover page and page 6 of the Alemite publication "Directions for Using the Alemite High-Pressure Lubricating System" (being defendant's Exhibit No. 75).
57. Notice of the Carr Fastener Co. relative to its withdrawal of the Dot lubricating system from the automotive field (being defendant's exhibit No. 76).

Patents, Publications, Drawings and Documentary Exhibits Offered by Defendant With Respect to the Zerk Patent in Suit

58. Hay and McIntyre, No. 499,541, June 13, 1893.
59. Crotty, No. 1,400,871, Dec. 20, 1921.
60. Manzel, No. 1,459,662, July 19, 1923
61. Wallace, No. 1,494,652, May 20, 1924.
62. Wallace (Reissue), No. 16,787, Nov. 22, 1927.
63. Clarkson (Brit.), No. 6,940, 1904.
64. Enlarged drawing of Figure 3 of Zerk patent in suit (being defendant's Exhibit No. 46).
65. Enlarged drawing of defendant's cone type contact nozzle and plaintiff's commercial Zerk type nipple (being defendant's Exhibit No. 47).
66. Sales receipt of the Alemite Lubricator Co. for pur-
[fol. 558] chase of Zerk type nipples or grease cups (being defendant's Exhibit No. 62).
67. Transcript of oral opinion of Judge Anderson, rendered on May 25, 1928.
68. Decree entered May 25, 1928.

69. Supplemental order of June 23, 1928, to be treated as part of the decree entered on May 25, 1928.
70. Injunction writ, dated July 5, 1928.
71. Defendant's petition for appeal.
72. Defendant's assignment of errors.
73. Order allowing defendant's appeal.
74. Defendant's cost bond on appeal.
75. Citation on appeal.
76. Plaintiff's petition for cross appeal.
77. Order allowing cross appeal.
78. Plaintiff's assignment of errors.
79. Cost bond on cross appeal.
80. Citation on cross appeal.
81. Order extending time in which to print and file record on appeal.
82. This præcipe.

Request is also hereby made that you certify and transmit to the Circuit Court of Appeals for the Sixth Circuit, the following items as physical exhibits:

Plaintiff's Exhibits

83. Exhibit "A" of affidavit of D. A. Beezley—service compressor.
84. Exhibit "A" of affidavit of O. A. Cummings—shop compressor, together with metal hose, bayonet coupling, and Zerk adapter.
85. The following exhibits offered in connection with the stipulated testimony of J. E. Otis, Jr.:
    Exhibit "A"—Alemite lubricant compressor,
    Exhibit "B"—Assortment of Alemite pin fittings,
    Exhibit "C"—Plaintiff's Alemite Manual,
    Exhibit "D"—Plaintiff's publication "How to Get More Alemite Business",
    Exhibit "E"—Plaintiff's Alemite and Alemite-Zerk price list,
    Exhibit "F"—Plaintiff's publication "Alemite Products",
    Exhibit "G"—Copies of title papers to Gullborg and Zerk patents,
    Exhibit "H"—Volume III of Adjudication Book,
[fol. 559] Exhibit "N"—Copy of Larkin 1926 catalogue constituting Exhibit 154 in Larkin-Chicago case,

Exhibit "O-1"—Larkin 1927 catalogue referred to in May 27, 1927 order for preliminary injunction,
Exhibit "O-2"—Larkin Miniature catalogue,
Exhibit "O-5"—Lubricant compressor and coupler like Exhibit "G" Sawitoski affidavit referred to in order of May 27, 1927 in Larkin-Chicago case,
Exhibit "P"—Larkin 1927 catalogue referred to in Preliminary Injunction Order of December 5, 1927 in Larkin-Chicago case,
Exhibit "P-1"—Larkin lubricant compressor and coupler of so-called small diameter type.

86. The following exhibits offered by plaintiff at the trial:
Exhibit 9—Assortment of Alemite-Zerk fittings,
Exhibit 10—Alemite-Zerk compressor,
Exhibit 11—Alemite Handy-Shop compressor,
Exhibit 12—Alemite H-15 Service compressor,
Exhibit 13—Alemite P-25 Service compressor,
Exhibit 14—Alemite-Zerk adapters for Alemite Handy-Shop compressor, Alemite H-15 compressor and Alemite P-25 compressor,
Exhibit 17—Suction demonstration apparatus,
Exhibit 18—A to J inclusive—O. K. case exhibits.

Defendant's Exhibits

87. Exhibit No. 3—"Parts Price List" accompanying the Alemite compressor (Exhibit 2).
88. Exhibit No. 4—Instructions for using H-15 compressor.
89. Exhibit No. 5—Alemite grease cup or pin fitting of The Bassick Mfg. Co.
90. Exhibit No. 6—Defendant's No. 20 "Whiz" hand compressor including:
Pump, 6-A.
Hose, 6-B.
Coupler, 6-C.
91. Exhibit No. 6-A—Pump forming part of defendant's hand compressor (Exhibit 6).
92. Exhibit No. 6-B—Flexible metallic hose forming part of defendant's hand compressor (Exhibit 6).
93. Exhibit No. 6-C—Bayonet coupler forming part of defendant's hand compressor (Exhibit 6).
[fol. 560] 94. Exhibit No. 6-CC—Sectional sample of defendant's coupler 6-C.

95. Exhibit No. 7—Alemite screw type of hand compressor of the Bassick Mfg. Co. including:
    Pump, 7-A.
    Metallic Hose, 7-B.
    Alemite bayonet coupler, 7-C.
96. Exhibit No. 7-A—Screw type of hand pump forming part of (Exhibit No. 7).
97. Exhibit No. 7-B—Flexible metallic hose forming part of (Exhibit No. 7).
98. Exhibit No. 7-C—Plaintiff's Alemite bayonet coupler forming part of (Exhibit No. 7).
99. Exhibit No. 8—Defendant's large size service compressor including:
    Pump, 8-A.
    Metallic hose, 8-B.
    Coupler, 8-C.
    Tank, 8-D.
    Textile hose, 8-E.
100. Exhibit No. 8-A—Defendant's pump (reciprocating piston pump) part of defendant service compressor (Exhibit 8).
101. Exhibit No. 8-B—Flexible metallic hose comprising part of defendant's service compressor (Exhibit 8).
102. Exhibit No. 8-C—Coupler forming part of defendant's service compressor (Exhibit 8).
103. Exhibit No. 8-D—Lubricant reservoir or tank forming part of defendant's service compressor (Exhibit
104. Exhibit No. 8-E—Fabric hose forming part of defendant's service compressor (Exhibit 8).
105. Exhibit No. 11—Sample of defendant's coupler like 6-C fitting for vacuum test.
106. Exhibit No. 13—Full size model of Barcus coupler.
107. Exhibit No. 14—Reduced model of Barcus coupler to fit Gullborg Alemite grease cup.
108. Exhibit No. 16—Model of Stedman Patent Coupler.
109. Exhibit No. 20—Alley's lubricating System including:
    Pump, 20-A.
    Screw coupler nozzle, 20-B.
    Bayonet coupler nozzle, 20-C.
    Screw type of grease cup or lubricator, 20-D.
[fol. 561] Bayonet type of grease cup or lubricator, 20-E.

110. Exhibit No. 20-A—Alley's Grease Pump.
111. Exhibit No. 20-B—Alley's Screw Type Coupler Nozzle.
112. Exhibit No. 20-C—Alley's Bayonet Type of Coupler Nozzle.
113. Exhibit No. 20-D—Alley's Screw Type Grease Cup or Lubricator.
114. Exhibit No. 20-E—Alley's Bayonet Type of Grease Cup or Lubricator.
115. Exhibit No. 26—Model of Winkley's grease cup.
116. Exhibit No. 27—Lubricant dispensing compressor having hose coupler exemplifying Winkley's "Claw" type of coupling.
117. Exhibit No. 28—Letter from Librarian of General Motor Co., authenticating photostat of Omnia publication.
118. Exhibit No. 38—"Dot" grease compressor embodying Murphy patent construction.
119. Exhibit No. 39—"Dot" nipple or grease cup embodying Murphy patent construction.
120. Exhibit No. 40—A grease cup illustrating a mode of contracting bayonet type of valved lubricant receptacle.
121. Exhibit No. 40-A—Sectional model of (Exhibit 40).
122. Exhibit No. 41—Defendant's abandoned coupler construction of the key-hole type.
123. Exhibit No. 43-A—Cut away or sectioned duplicate of nozzle of Zerk gun or compressor.
124. Exhibit No. 44—Zerk nipple or grease cup.
125. Exhibit No. 44-A—Sample of cut away or sectioned Zerk nipple or grease cup.
126. Exhibit No. 45—Defendant's cone type of contact nozzle for use on Zerk nipple.
127. Exhibit No. 45-A—Cut away or sectioned sample of defendant's cone type of contact nozzle.
128. Exhibit No. 53—Model of Hay & McIntyre lubricating pump.
129. Exhibit No. 54—Model of Hay & McIntyre lubricant receptacle.
130. Exhibit No. 57—O. K. screw type of hose and coupler.
131. Exhibit No. 61—Zerk nipples or grease cups purchased from the Alemite Lubricator Co.

132. Exhibit No. 63—Picture of Hollingshead gear grease dispensing compressor or pump unit.

[fol. 562] 133. Exhibit No. 64—Dot adapter or connector by defendant with its chassis lubricator dispensing compressors of (Defendant's Exhibit No. 8).

134. Exhibit No. 68—Portfolio of Alemite advertisements.

135. Exhibit No. 69—Alemite advertisement in Saturday Evening Post, August 20, 1927 (photostatic reproduction).

136. Exhibit No. 70—Publication of the Bassick Co. entitled "Alemite Transmission Lubricant" (photostatic reproduction).

137. Exhibit No. 71—Publication of the Bassick Co. entitled "Why There Is a Few Cents Difference In Lubricants" (photostatic reproduction).

138. Exhibit No. 72—Publication of the Bassick Co. entitled "Industrial Opportunities" (photostatic reproduction).

139. Exhibit No. 73—Publication of the Bassick Co. entitled "Alemite High Pressure", June 1927 (photostatic reproduction).

140. Exhibit No. 74—Publication of the Bassick Co. entitled "Alemite-ing a Profitable Business."

—— ——, Counsel for Plaintiff.

Consented to by:

Leonard L. Kalish, E. Hayward Fairbanks, Counsel for Defendant.

IN UNITED STATES DISTRICT COURT

PLAINTIFF'S SUPPLEMENTAL PRÆCIPE—Filed Nov. 27, 1928

To the Clerk of the said Court:

An appeal having been allowed the R. M. Hollingshead Company and a cross appeal having been allowed The Bassick Manufacturing Company in the above entitled cause, and the plaintiff's having filed and served on July [fol. 563] 23, 1928 a præcipe for transcript of record on cross appeal, the defendant having filed a præcipe for transcript of record on appeal, the same having been filed on September 22, 1928, the plaintiff now withdraws its præ-

cipe filed on July 23, 1928 and adopts the præcipe filed by defendant on September 22, 1928, but requests that the same be supplemented as follows:

Please print:

Transcript of proceedings including condensed statement of evidence before the Master, incorporating the testimony of Hugh C. Gibson and John M. McGregor.

Plaintiff's Exhibit 1—Bassick Company motion to dismiss Miller Company case and affidavits of J. E. Otis, Jr., and Elwood Hansmann and exhibits submitted therewith.

Please transmit as physical exhibits the following exhibits offered by defendant before the Master:

Defendant's Exhibit A, B and F—couplers.
Defendant's Exhibit C and G—fittings.

Please also transmit as physical exhibits the following exhibits offered by plaintiff at the trial:

Plaintiff's Exhibit 6—Defendant's brief on question of infringement before the Master.

Plaintiff's Exhibit 7—Defendant's reply memoranda before the Master.

Plaintiff's Exhibit 19—Transcript of Miller case argument upon motion to supplement and explain order of dismissal.

Lowell W. Taylor, Williams, Bradbury, McCaleb & Hinkle, Solicitors and Counsel for Plaintiff.

[fols. 564 & 565] Clerk's Certificates to foregoing transcript omitted in printing.

[fol. 566] IN UNITED STATES DISTRICT COURT

No. 935 Equity

THE R. M. HOLLINGSHEAD COMPANY

vs.

THE BASSICK MANUFACTURING COMPANY

MANDATE OF CIRCUIT COURT OF APPEALS—Filed Jan. 9, 1932

The President of the United States of America to the Honorable the Judges of the District Court of the United States for the Western District of Tennessee, Greeting:

Whereas, lately in the District Court of the United States for the Western District of Tennessee, before you or some of you, in a cause between The Bassick Manufacturing Company, Plaintiff, and The R. M. Hollingshead Company, Defendant, a decree was entered on the 25th day of May, 1928, and the further decree on June 23rd, 1928;

And whereas, the said plaintiff The Bassick Manufacturing Company, appealed to this court as by the inspection of the transcript of the record of the said District Court, which was brought into the United States Circuit Court of Appeals for the Sixth Circuit by virtue of an appeal agreeably to the Act of Congress, in such cases made and provided, fully and at large appears.

And whereas, in the present term of October, in the year of our Lord, one thousand nine hundred and thirty, the said cause came on to be heard before the said United States Circuit Court of Appeals for the Sixth Circuit, on the said transcript of record, and was argued by counsel;

On consideration whereof, it is now here ordered, adjudged and decreed by this court that the appeal from the said District Court in this cause be and the same is hereby dismissed.

You, therefore, are hereby commanded that such proceedings be had in said cause, in conformity with the opinion and decree of this court, as according to right and justice, and the laws of the United States, ought to be had, the said appeal notwithstanding.

[fol. 567] Witness the Honorable Charles Evans Hughes, Chief Justice of the United States, the seventh day of Jan-

uary, in the year of our Lord one thousand nine hundred and thirty-two.

J. W. Menzies, Clerk, United States Circuit Court of Appeals for the Sixth Circuit. (Seal.)

IN UNITED STATES DISTRICT COURT

MANDATE OF CIRCUIT COURT OF APPEALS—Filed Jan. 9, 1932

The President of the United States of America, to the Honorable the Judges of the District Court of the United States for the Western District of Tennessee; Greeting:

Whereas, lately in the District Court of the United States for the Western District of Tennessee, before you or some of you, in a cause between The Bassick Manufacturing Company, Plaintiff, and The R. M. Hollingshead Company, Defendant, a decree was entered on the 25th day of May, 1928, and the further decree on June 23rd, 1928.

And whereas, the said defendant, The R. M. Hollingshead Company, appealed to this court as by the inspection of the transcript of the record of the said District Court, which was brought into the United States Circuit Court of Appeals for the Sixth Circuit by virtue of an appeal agreeably to the Act of Congress, in such cases made and provided, fully and at large appears.

And whereas, in the present term of October, in the year of our Lord, one thousand nine hundred and thirty, the said cause came on to be heard before the said United State Circuit Court of Appeals, for the Sixth Circuit, on the said transcript of record, and was argued by counsel; [fol. 568] On consideration whereof, It is now here ordered, adjudged and decreed by this court that the appeal from the said District Court in this cause be and the same is hereby dismissed.

You, therefore, are hereby commanded that such proceedings be had in said cause, in conformity with the opinion and decree of this court, as according to right and justice, and the laws of the United States, ought to be had, the said appeal notwithstanding.

Witness the Honorable Charles Evans Hughes, Chief Justice of the United States, the seventh day of January,

in the year of our Lord one thousand nine hundred and thirty-two.

J. W. Menzies, Clerk, United States Circuit Court of Appeals for the Sixth Circuit. (Seal.)

IN UNITED STATES DISTRICT COURT

MOTION TO MOVE COURT TO ENTER ORDER MAKING DECREE OF CIRCUIT COURT OF APPEALS THE DECREE OF THIS COURT —Filed Sept. 23, 1932

On Saturday, October 1, 1932, defendant The R. M. Hollingshead Company will move the court to enter an order making the decree of the United States Circuit Court of Appeals in this cause the decree of this court and setting aside the decrees of this court heretofore entered on May 25, 1928, and June 23, 1928, and setting aside the injunction writ heretofore filed herein on July 9, 1928, but continuing in force the interlocutory injunction heretofore issued and restoring this case to the docket of this court to be heard on its merits, without any question herein being foreclosed.

Defendant The R. M. Hollingshead Company will also ask leave to file an amendment to its answer and also to [fol. 569] file interrogatories addressed to the plaintiff under Federal Equity Rule No. 58. Copy of the decree which defendant will ask this court to enter and also copy of the proposed amendment to defendant's answer and also copy of the interrogatories addressed to plaintiff are attached to this motion.

Leonard L. Kalish, Burch Minor & McKay, Solicitors for Defendant.

Copy of the above motion and also copies of the decree, amendment to answer, and interrogatories referred to in said motion have been delivered today to Mr. Lowell Taylor, attorney for plaintiff The Bassick Manufacturing Company, this September 23, 1932.

Chas. N. Burch, Solicitor for Defendant.

In United States District Court

Order Making Decree of Circuit Court of Appeals the Decree of This Court—Entered Sept. 23, 1932. H. B. Anderson, Judge.

This cause came on this day to be heard upon the mandates from the United States Court of Appeals for the Sixth Circuit, and mandates being dated the 7th day of January, 1932 and filed in this court on the 9th day of January, 1932; said mandates are in words and figures as follows:

"The President of the United States of America to the Honorable the Judges of the District Court of the United States for the Western District of Tennessee—Greeting:

Whereas, lately in the District Court of the United States for the Western District of Tennessee, before you or some [fol. 570] of you, in a cause between The Bassick Manufacturing Company, Plaintiff, and The R. M. Hollingshead Company, Defendant, a decree was entered on the 25th day of May, 1928, and the further decree on June 23rd, 1928.

And whereas, the said plaintiff, the Bassick Manufacturing Company appealed to this court as by the inspection of the transcript of the record of the said District Court, which was brought into the United States Circuit Court of Appeals for the Sixth Circuit by virtue of an appeal agreeably to the Act of Congress, in such cases made and provided, fully and at large appears.

And whereas, in the present term of October, in the year of our Lord, one thousand nine hundred and thirty, the said cause came on to be heard before the said United States Circuit Court of Appeals for the Sixth Circuit, on the said transcript of record, and was argued by counsel;

On consideration whereof, it is now here ordered, adjudged and decreed by this court that the appeal from the said District Court in this cause be and the same is hereby dismissed.

You, therefore, are hereby commanded that such proceedings be had in said cause in conformity with the opinion and decree of this court, as according to right and

justice, and the laws of United States, ought to be had, said appeal notwithstanding.

Witness the Honorable Charles Evans Hughes, Chief Justice of United States the — day of ——, in the year of our Lord one thousand nine hundred and

J. W. Menizes, Clerk, U. S. Circuit Court of Appeals for the Sixth Circuit."

(No. 5398.)

"The President of the United States of America to the Honorable the Judges of the District Court of the United States for the Western District of Tennessee—Greeting:

Whereas, lately in the District Court of the United States for the Western District of Tennessee, before you or some of you, in a cause between The Bassick Manufacturing Company, Plaintiff, and The R. M. Hollingshead Company, Defendant, a decree was entered on the 25th day of May, 1928, and the further decree on June 23rd, 1928.

[fol. 571] And whereas, the said defendant, The R. M. Hollingshead Company appealed to this court as by the inspection of the transcript of the record of the said District Court, which was brought into the United States Circuit Court of Appeals for the Sixth Circuit by virtue of an appeal agreeeably to the Act of Congress, in such cases made and provided, fully and at large appears.

And whereas, in the present term of October, in the year of our Lord one thousand nine hundred and thirty, the said cause came on to be heard before the said United States Circuit Court of Appeals for the Sixth Circuit, on the said transcript of record, and was argued by counsel;

On consideration whereof, it is now here ordered, adjudged and decreed by this court that the appeal from the said District Court in this cause be and the same is hereby dismissed.

You, therefore, are hereby commanded that such proceedings be had in said cause, in conformity with the opinion and decree of this court, as according to right and justice, and the laws of the United States, ought to be had, the said appeal notwithstanding.

Witness, the Honorable Charles Evans Hughes, Chief Justice of the United States, the — day of ——, in the year of our Lord one thousand nine hundred and

J. W. Menizes, Clerk, U. S. District Court of Appeals for the Sixth Circuit."

(No. 5397.)

Upon consideration whereof it is ordered that the mandates of the said United States Circuit Court of Appeals be and are hereby made the decrees of this court. And in accordance therewith it is ordered that the decree of this court entered herein on May 25, 1928, and the decree of this court entered herein on June 23, 1928 be and the same are hereby set aside. And it is further ordered that the injunction writ filed herein on July 9, 1928, making perpetual the temporary injunction therefore granted, be and the same is hereby set aside.

It is further ordered, however, that the temporary or interlocutory injunction heretofore issued in this cause shall remain in full force and effect subject to further order of this court.

[fol. 572] It is further ordered that this cause be restored to the trial docket of this court to be heard on its merits, no question herein being foreclosed, as adjudged by the said United States Circuit Court of Appeals.

Thereupon defendant R. M. Hollingshead Company asked leave of the court to file an amendment to its answer and also leave to file interrogatories addressed to the plaintiff herein in accordance with Federal Equity Rule 58, said defendant exhibiting to the court its proposed amendment to its answer and also the interrogatories which it proposes to file. Upon consideration thereof it is ordered by the court that the defendant be permitted to file said amendment to its answer and also said interrogatories.

IN UNITED STATES DISTRICT COURT

AMENDMENT TO ANSWER OF DEFENDANT, THE R. M. HOLLINGSHEAD COMPANY—Filed Sept. 23, 1932

Now comes defendant, by leave of court first obtained, and amends its answer heretofore filed, as follows:

At the end of the list of patents inserted into paragraph 13 of the Answer, by the Amendment thereto filed December 15, 1927, (said list now appearing at the bottom of page 32 and top of page 33 of the Transcript of Record on Appeal No. 5397, entitled "The R. M. Hollingshead Company vs. The Bassick Manufacturing Company" in the United States Circuit Court of Appeals for the Sixth Circuit) insert the following list of additional patents:

Beebe, 314,783, March 31, 1885;
Schumacher, 920,188, May 4, 1909;
James, 929,091, July 27, 1909;
Manzel, 931,327, Aug. 17, 1909;
Morse, 1,248,526, Dec. 4, 1917;
Piquerey, 1,276,108, Aug. 20, 1918.

[fol. 573] At the end of the list of patents inserted into paragraph 14 of the Answer, by the Amendment thereto filed December 15, 1927, (Said list now appearing in the lower half of page 33 of the Transcript of Record on Appeal No. 5397, entitled "The R. M. Hollingshead Company vs. The Bassick Manufacturing Company" in the United States Circuit Court of Appeals for the Sixth Circuit) insert the following list of additional patents:

Uhl et al., 1,205,686, Nov. 21, 1916;
Zerk, 1,619,455, May 1, 1927;
Sheppard (British), 140,355, March 25, 1920;
Wm. L. Morris, Re. 18123, July 7, 1931;
Wm. L. Morris, Re. 18278, Dec. 8, 1931;
Wm. L. Morris, 1,816,022, July 28, 1931.

Leonard L. Kalish, Burch Minor & McKay, Solicitor and Counsel for Defendant.

IN UNITED STATES DISTRICT COURT

DEFENDANT'S INTERROGATORIES UNDER RULE 58—Filed Sept. 23, 1932

Now comes the defendant, by leave of court first obtained and propounds the following interrogatories to be answered under oath on, or before the — day of ——, 1932, by J. E. Otis, Jr., Vice-President and general manager of the plaintiff corporation, or by such other officer of the plaintiff corporation having knowledge of the facts:

Interrogatory No. 1: State whether plaintiff has acquired any interest in any one or more of the following United States patents, and if so, state in which it has acquired an interest:

Wm. L. Morris, Re. 18,123, July 7, 1931;
Wm. L. Morris, Re. 18,278, Dec. 8, 1931;
Wm. L. Morris, 1,816,022, July 28, 1931.

[fol. 574] Interrogatory No. 2: State whether plaintiff has taken a license under any one or more of the United States patents identified in the preceding Interrogatory No. 1, and if so, state under which of these patents it has taken a license.

Interrogatory No. 3: If answer to either interrogatory No. 1 or Interrogatory No. 2 is in the affirmative, produce and submit a true and complete copy of any and all existing instrument or instruments, or other writings defining plaintiff's interest in, or plaintiff's license under any one or more of the patents identified in Interrogatory No. 1.

Interrogatory No. 4: If answer to either Interrogatory No. 1 or Interrogatory No. 2 is in the affirmative, state whether any claim or claims of any one or more of the patents identified in Interrogatory No. 1, are readable upon the same structure of defendant's alleged infringing devices in this suit, which plaintiff alleges in its Bill of Complaint to constitute the infringement complained of, of either or both of the patents here in suit.

Interrogatory No. 5: If answer to either Interrogatory No. 4 is in the affirmative, either wholly or in part, point out particularly each and every claim of the patents identified in Interrogatory No. 1, which are readable upon the same structure of defendant's alleged infringing devices in this suit, which plaintiff alleges in its Bill of Complaint to constitute the infringement complained of, of either or both of the patents here in suit, and point out particularly, with reference to the Exhibits in this case, upon which of the several alleged infringing structures each claim is readable.

Leonard L. Kalish, Burch Minor & McKay, Solicitor and Counsel for Defendant.

[fol. 575] IN UNITED DISTRICT COURT

ORDER DISALLOWING MOTIONS TO SET ASIDE FORMER DECREES, ETC.—Entered Nov. 19, 1932. H. B. Anderson, Judge

This cause was heard on the motion of the defendant filed herein on September 23, 1932 and the oral motions made in open court in pursuance thereof (and the affidavit of L. L. Kalish, filed in support thereof) in which motions defendant, The R. M. Hollingshead Company, moved the court to enter an order making the decree of the United States Circuit Court of Appeals in this cause the decree of this court and to set aside the decrees of this court heretofore entered on May 25, 1928 and June 23, 1928 and to set aside the injunction writ filed herein on July 9, 1928, and to restore this cause to the docket of this court to be heard on its merits, without any question herein being foreclosed, and defendant, The R. M. Hollingshead Company, also moved the court for leave to file an amendment to its answer and also to file interrogatories addressed to the plaintiff under Federal Equity Rule No. 58, and defendant attached to said motions the copy of the decree which the defendant asked the court to enter and also a copy of the proposed amendment to defendant's answer and also a copy of the interrogatories addressed to the plaintiff.

After argument of counsel and due consideration by the court, it is ordered, adjudged and decreed that each and all of said motions be disallowed and denied, to which action of the court the defendant duly excepted.

This order is entered prior to final decree of this date.

[fol. 576] IN UNITED STATES DISTRICT COURT

FINDINGS OF FACT AS PROPOSED BY DEFENDANT—Filed Nov. 19, 1932

1. That the defendant's coupler, exemplified in and forming a part of plaintiff's Exhibit A of the affidavit of D. A. Beezley of April 12, 1926, and also illustrated in the drawing constituting plaintiff's Exhibit 15, is a coupler of the "suctional" type shown in the drawings of Gullborg patent No. 1307734 and described in the specification thereof and variously defined in claims 1, 2, 3, 4, 5, 6, 8 and 10 thereof.

2. That defendant's coupler, exemplified in and forming a part of Exhibit A of the affidavit of O. A. Cumming of September 13, 1926 and illustrated in the drawing constituting plaintiff's Exhibit 16, does not embody the suction-producing construction shown in the drawings of the Gullborg Patent No. 1307734 and described in the specification of said patent and variously defined in claims 1, 2, 3, 4, 5, 6, 8 and 10 of said patent.

3. That defendant's push-contact type nozzle (for use in conjunction with defendant's lubricant compressor) exemplified in Exhibit A of affidavit of O. A. Cumming of September 13, 1926, and also illustrated in the drawings constituting defendant's Exhibit No. 47, has a contact surface which is not spherical but which is conical.

4. That defendant's coupler, referred to in paragraph 1 hereof, is incapable of effecting any "suction" or "self-cleansing" result, when associated with either defendant's service type compressor exemplified in Exhibit A of Beezley affidavit and in defendant's Exhibit 8a or with defendant's handy-shop type compressor exemplified in Exhibit A of Cumming affidavit and in defendant's Exhibit 6 and illustrated in plaintiff's Exhibit 16, because said defendant's compressors are not provided with any means for relieving or stopping, prior to uncoupling, any heavy grease pressure produced by the compressor.

Respectfully submitted, by Leonard L. Kalish, of Counsel for Defendant.

[fol. 577] IN UNITED STATES DISTRICT COURT

PROCEEDINGS ON MOTIONS TO ENTER DECREE AND FINDINGS OF FACT

The hearing on the above matter was had before the Honorable Harry B. Anderson, Judge of the District Court of the United States for the Western District of Tennessee, in the District Court House at Memphis, Tennessee, beginning at ten o'clock A. M. November 19th, 1932, whereupon proceedings were had as follows:

Appearances

For Plaintiff: Mr. Lynn A. Williams, of Chicago, Illinois; Mr. Lowell Taylor, of Memphis, Tennessee.

For Defendant: Mr. Leonard L. Kalish, of Philadelphia, Pa.; Mr. Chas. N. Burch, of Memphis, Tennessee.

The Court: Go ahead.

Mr. Kalish: The court will recall that in the summer of 1928 a trial was had before this court in the case of Bassick Manufacturing Company vs. R. M. Hollingshead Company. As a result of that trial a decree was entered, and on that decree an appeal was taken, and incidentally, a cross appeal was taken. That appeal was prosecuted in the regular way, and it came on for argument, on, I think it was the 20th of February, 1930. It was argued at length, and voluminous briefs filed on both sides, and in June of 1931, I think—I may be wrong a month or two, but approximately so, an opinion was handed down by the Court of Appeals for the Sixth Circuit, written by Judge Denison, in which the appeal was dismissed on the ground that it was an appeal primarily from a decree which had the characteristics solely of a declaratory judgment. In other words the Court of Appeals took the view that these structures upon which plaintiff brought the suit were not the structures forming the basis of the appeal, but that the structures forming the basis of the appeal were solely those structures which the defendant submitted at one stage as you will recall, to get the view of the court upon those newly submitted structures. Those newly submitted structures were referred to the Master, as you will recall, and the Court of Appeals got the view, took the view I would say, ably guided [fol. 578] by Mr. Williams' brief, that the appeal was in fact nothing more than an appeal from a declaratory judgment.

As a matter of fact, your Honor will recall that the court enjoined the infringement not only of those things, those devices which the defendant submitted and which were referred to the Master, but this court also enjoined and held as infringements those very devices which plaintiff based its suit upon.

However, that may be, a motion was brought, and petition was filed for a rehearing, and the court rendered an opinion on that without granting the re-hearing, in which it reiterated its belief that this case was not in proper shape for appeal, and referred the case back to this court——

The Court: Well, it was primarily the Court's fault. I think Mr. Williams submitted a decree, very lengthy decree that was in proper form, but being a question of ordinary practice of law, Mr. Minor and I could see no necessity of that lengthy decree, and entered a short decree that we thought covered the subject. Apparently Mr. Minor and I were decidedly wrong on that matter.

Mr. Kalish: Well, I am inclined to think the decree which was entered was probably sufficient, had it not been for the very strenuous contention that the case was not in proper form. But however that may be, we are now back before the District Court with the directions of the Appellate Court to consider this case further, if desired, to hold no question concluded by the opinion of the Court of Appeals, and a motion has been presented here about ten weeks ago which is up before the Court now. A motion to set aside the decree of this court rendered in 1928, so that the case may then be opened for further proceedings.

A second motion is pending before this court also, a motion for leave to file interrogatories, and requiring the interrogatories propounded by defendant—requiring the plaintiff to answer the interrogatories.

A further motion is pending before this court, and that is a motion under the answer——

Mr. Williams: I didn't mean to interrupt, but you don't want to misstate your motion; your motion is, is it not, for leave to file interrogatories? There is no motion for a direction as to answering interrogatories, because I have not prepared to answer any motion to direct answers, but merely the motion as for leave to file. I think there is a difference.

[fol. 579] Mr. Kalish: Mr. Williams is technically probably correct. However, we are both approximately—well, I know I am twelve hundred miles from the seat of this court, and my client, the defendant in this case, has been in this litigation now six and one half years, and it has been under an injunction over five years, prevented from doing an otherwise lucrative business. An injunction which has seriously injured this defendant. Now technically Mr. Williams is correct. However, I am going to ask this Court to dispose of all matters which this court may now dispose of, because Mr. Williams, I am confident, is fully familiar with every detail of this case, and I am sure Mr. Williams needs

no preparation to argue the simple question of interrogatories, and I don't think we ought to be required to come down here three weeks or three months later on that second question.

Now before going into these three motions I would like to review, because it is necessary that the Court understand what the issues are before it passes——

The Court (interrupting): Well now, let's get this straight. Is it not a fact that the Court of Appeals dismissed the appeal on account of the form of the decree, and the only thing that is now before the court is to get a decree in proper shape so that it can be appealed from? Isn't that all? I don't want to hear this case again. I have heard all I want of this case—here, and in New York and in other places that I want to, unless there is something new. I decided it at the time, and if a decree can be drawn in accordance with my decision in 1930 which will properly present the matter to the Court of Appeals, I want that done.

Mr. Williams: I have such a decree here.

Mr. Kalish: If your Honor please, such a decree may possibly be drawn, if there is some understanding and agreement as to what the facts of the case are. Let me just say a few words on that——

The Court: Certainly.

Mr. Kalish: Since the court rendered its decision in this case a rule has been promulgated by the Supreme Court, Rule 70½, which specially requires the District Court to supply with its decision a series of findings of fact. The reason for that is obvious. When a case comes from this court to an Appellate Court, not only shall the points of law forming the basis of the decision be announced, but the facts which formed the basis of that decision shall also be stated.

[fol. 580] This case proceeded in a way which is possibly not common in this court, but is common in patent cases. The plaintiff filed its motion for preliminary injunction, and as the basis for that motion, had filed a series of affidavits, among them the affidavits establishing the purchase of the alleged infringing structures. Those alleged infringing structures, and the accompanying affidavits were the basis of his preliminary injunction, or the preliminary injunction of this court. When the case proceeded to final hearing those physical exhibits were in Memphis. Testimony of

defendant's witnesses was taken under the statute by depositions in Philadelphia. We consulted Mr. Hansmann, of Mr. Williams' office, on the occasion of the taking of these depositions. We were ready then, we so said, to produce expert testimony in the usual way to prove, to establish whether or not these alleged infringing structures did, or did not, respond to the claim of the patents. It was then agreed between Mr. Hansmann and myself and Mr. Fairbanks that it would not be necessary to make arrangements to bring these plaintiff's exhibits from Memphis to Philadelphia, in order that our witnesses might testify with respect to these devices. We supplied then and there structures which were then and there agreed upon to be duplicates of the devices which were here in court. They were so identified. They were testified to. We spent, I don't recall now, but between two and three—no, I think it was about four days taking the depositions of these witnesses with Mr. Hansmann and Mr. Williams' office, cross examining at length. These devices were exhibited then, and were later accepted by this court as being duplicate of the devices forming the basis of the suit, the devices which plaintiff introduced on its motion for preliminary injunction. The case before this court was argued on the assumption—which has never, in the least, been in doubt, which was never questioned—was argued on the assumption that the devices which were introduced in Philadelphia were in fact duplicates, and they are in fact duplicates of the devices which plaintiff introduced. So the case proceeded on the argument. In one case you will recall there was the Gullborg patent, which had a coupler known as the bayonet coupler, and arguments on that patent proceeded on whether or not our coupler was capable of producing the so-called sectional effect which was required in some, but not all of the claims of the patent. Mr. Williams argued it did, and we argued it did not.

[fol. 581] As to the Zerk patent, it was argued by us that our device did not respond to the claim of the patent because our device did not have the spherical surface required by the claims, but had a conical surface. Mr. Williams argued at length and successfully that it did not make any difference whether it had a spherical nozzle or a conical nozzle, that that was merely a matter of degree.

And so the case went to the Court of Appeals, and for the first time in the Court of Appeals we were confronted

with a brief by Mr. Williams, covering, I should say, over three hundred pages, which was devoted to the three main points. The first point was that the only devices before the court were those devices which were introduced by plaintiff on its motion for preliminary injunction and reintroduced at the trial hearing, and that the devices which were introduced in Philadelphia, and which were accepted throughout as being, in fact, duplicates of those devices, were, in fact, not before the court at all. And secondly, Mr. Williams argued that these devices which were introduced by plaintiff, the one had suction, and the other had the spherical surface. These things were things not found in the record, but arrived at by demonstrations in open court before the Appellate Court.

The third point was that the whole appeal was from a declaratory judgment and hence should be dismissed.

Now it is, therefore, I think, important, that before this case leaves this court again, we shall have not only a decision but a series of findings of fact which will establish once and for all just what the facts are upon which we are going to appeal. Now if Mr. Williams is in agreement as to what the facts are, I think this court can enter a decree today. If Mr. Williams is not in agreement as to what the facts are, I request that the defendant be given opportunity to establish just what the facts are.

The Court: I am not going to hear any more evidence on this matter. There was a full hearing before a Master, and a most lengthy argument before me, and I decided the case, and I rather directed the nature of the decree which apparently is the cause of all this trouble. Let a decree be entered as of my ruling of that date, which you gentlemen remember a great deal more clearly than I do.

Mr. Williams: I have here, if the court please, a decree which is the conventional decree in a patent case, which was submitted to your Honor after your Honor's decision was [fol. 582] announced from the bench. We did include an injunction relative to these new or proposed devices which Mr. Kalish has referred to. The Court of Appeals has held, in effect, that it was an inappropriate use of the Court's discretion to attempt to pass upon the question of contributory infringement by the defendant's sale of those proposed substitutes for what had previously been sold, particularly in view of the fact that this whole suit related to contributory infringement as contrasted with direct infringement,

and a contributory infringement involved the element of intent. The intent with which the defendant sells its devices as to whether the purchaser shall combine them with something else to complete an infringement is really at the foundation of the question of contributory infringement. The defendant, in effect, after the motion for preliminary injunction had been granted, came into court and said "Now here are some other devices which we exhibit that we would like the judgment of the court as to whether we may sell these without infringement, and we call the court's attention to the fact that while these devices can be used in combination with the alemite fittings of the plaintiff, they also can be used with this funny new fitting that we have devised and we have submitted. As the Court of Appeals said in its decision, the representation made by the defendant was that if it sold these grease guns with these proposed new couplers, they would be used with the defendant's proposed new fittings. We complained that that was a camouflage, that the real intent was to sell those guns to service stations and garages with the expectation that they would be used with our fittings.

The Court: Well, the matter of interest to the court at this time is to have a decree in accordance with the opinion that was rendered at that time, and in accordance with the opinion handed down by the Court of Appeals on the appeal.

Mr. Williams: Well now, I speak of that only for this reason, that the decree which was submitted in May, 1928, undertook to enjoin the defendant in accordance with the Master's report, and your Honor's confirmation of the report relative to those new things as well as the things that they actually had sold. Now to that extent the Court of Appeals has held that the undertaking to give that declaratory judgment was virtually an abuse of discretion. Now I have therefore drawn a new decree which omits those things, relative to the declaratory judgment phase of the [fol. 583] matter, and I have that here, and I have also suggestions as to findings of fact, as counsel suggests is in order under this new Rule 70½, I believe. I will be glad to hand up that.

The Court: Have you shown a copy to Mr. Kalish?

Mr. Kalish: No, I have not.

The Court: Well, I will take a recess of fifteen minutes, and let Judge Burch and Mr. Kalish look over that.

563

Judge Burch: Just before your Honor adjourns, the motion here is for leave to file an amendment to the answer, with the idea of taking some additional proof, and also a motion to file interrogatories with the idea of adducing some additional proof. Now those two motions, of course, will have to be passed upon, either granted or denied.

The Court: I am going to deny those motions. This was a very full hearing on the same things, and it went off on a question of declaratory judgment and so forth, and the court is very overburdened at this time, a matter of refreshing my mind when I passed on it, and all I want to do is get a decree entered which is in accordance with my opinion at that time, and the rulings of the Circuit Court, and therefore I will take a recess. I will overrule the motion about additional proof at present.

Mr. Kalish: May I say a word in that direction? I don't think I made it clear to your Honor what this motion to amend amounts to, and why that motion is brought. Since this court rendered its opinion, as a matter of fact more than a year thereafter, certain patents issued from the Patent Office bearing a filing date earlier than either of the patents in suit, which under the decision of the Supreme Court may be prior art. That, we say, is newly discovered evidence.

Mr. Williams: You do not say that in your motion papers. There is no*w* the slightest showing on any basis——

The Court: Well, let Mr. Kalish finish his statement.

Mr. Williams: Pardon me.

Mr. Kalish: Again I might say these are technical objections, but if your Honor please, I will revise my motion right now to the extent of saying that the motion to amend the answer is for the purpose of submitting to the court, introducing before the court newly discovered evidence which Mr. Williams recognizes as being newly discovered evidence, evidence which was not available at the time of the trial and prior to the decree, could not have been avail-[fol. 584] able by the most diligent search, because the patents did not issue until a year or more after the decree of this court, because patent applications, prior to the issuance of patents thereon, are held in absolute secrecy by the Government, and not open to inspection to anybody except the applicant, his attorney and assignee. Those applications were in the Patent Office, if I am not mistaken, fourteen years. They were filed prior to the date of filing

of either of these two patents in suit, and they disclose the full invention of one of the patents in suit, and have a vital bearing on the other patent in suit. Under the Supreme Court decision of Alexander Davis vs. Milburn, the patents which I seek to submit, notably the Morris patent, are prior art with respect to both of these patents, and I think it is in order for the court to admit them as newly discovered evidence.

The Court: I gave a full hearing on this matter. There was a full hearing before the Master. The decree went off largely through the court insisting on a short decree in accordance with the Tennessee equity practice, and also by a passing on a declaratory judgment. I am not going to open the case at this time. I am going to stand on my original ruling, and only cut out any rulings on the declaratory judgment feature, and I will take a recess of fifteen minutes so you can look over the proposed decree, and the findings of fact and either agree or settle the matter.

To the action of the court in refusing to grant the motions referred to, the defendant then and there excepted.

The said motions are as follows:

On Saturday, October 1, 1932, defendant The R. M. Hollingshead Company will move the court to enter an order making the decree of the United States Circuit Court of Appeals in this cause the decree of this court and setting aside the decrees of this court heretofore entered on May 25, 1928 and June 23, 1928, and setting aside the injunction writ heretofore filed herein on July 9, 1928, but continuing in force the interlocutory injunction heretofore issued and restoring this case to the docket of this court to be heard on its merits, without any question herein being foreclosed.

Defendant The R. M. Hollingshead Company will also ask leave to file an amendment to its answer and also to file interrogatories addressed to the plaintiff under Federal Equity Rule No. 58. Copy of the decree which defendant will ask this court to enter and also copy of the proposed amendment to defendant's answer and also copy of the [fol. 585] interrogatories addressed to plaintiff are attached to this motion.

A recess was thereupon taken until two o'clock P. M.

Afternoon Session

The hearing was resumed at two o'clock P. M. as follows:

Judge Burch: May it please the court, there is an affidavit of Mr. Kalish I would like to file in support of the motions that were made this morning giving the reasons he feels that it is necessary to take additional proof, to file amendment to his answer and to file interrogatories in order to adequately present his defense.

The Court: Very well.

Mr. Williams: I want to object to the receipt of that affidavit at this time. It was only handed me since two o'clock, and we, of course, have no opportunity to answer it.

The Court: Well, let it be filed.

Mr. Williams: I think I should like to take an exception to that.

The Court: Certainly.

The said affidavit is as follows:

I, L. L. Kalish, being duly sworn, depose and say:

That I am of lawful age, an attorney-at-law and have been of counsel for defendant in the above identified cause since its beginning.

I am familiar with the proceedings in this case. I have examined the three Morris patents, Re-issue No. 18123, Re-issue No. 18278 and No. 1816022 and truly believe that the disclosure of said patents constitute an anticipation of the patents in suit, particularly the Zerk patent No. 1,475,980, and are, therefore, material to the determination of this cause.

The above identified Morris patents bear original Patent Office filing date of August 7, 1916, but were not issued until substantially subsequent to the decree of this court of May, 1928, and therefore, said patents constitute newly discovered evidence which was not available at the trial of this cause and could not have been rendered available by diligent search because the files of these patents in the Patent Office did not become open to public inspection until their respective dates of issuance, all of which were much subsequent to the trial and determination of this cause in May, 1928.

Further affiant saith not.

[fol. 586] Judge Burch: Now, your Honor, this morning overruled the motions that were made, and of course, I am

not going to re-argue that, but I have prepared a decree covering what took place this morning, which covers one page of typewritten matter. I shall read it, or give it to your Honor. I submitted a copy of it to Mr. Williams.

The Court: Just read it.

Judge Burch: Would your Honor like me to read it?

The Court: Yes.

Counsel thereupon read in evidence the said decree, the same being in words and figures following, to-wit:

This cause was heard on the motion of the defendant filed herein on September 23, 1932 and the oral motions made in open court in pursuance thereof (and the affidavit of L. L. Kalish filed in support thereof) in which motions defendant, The R. M. Hollingshead Company, moved the court to enter an order making the decree of the United States Circuit Court of Appeals in this cause the decree of this court and to set aside the decrees of this court heretofore entered on May 25, 1928 and June 23, 1928, and to set aside the injunction writ filed herein on July 9, 1928, and to restore this cause to the docket of this court to be heard on its merits, without any question herein being foreclosed, and defendant, The R. M. Hollingshead Company, also moved the court for leave to file an amendment to its answer and also to file interrogatories addressed to the plaintiff under Federal Equity Rule No. 58, and defendant attached to said motions the copy of the decree which the defendant asked the court to enter and also a copy of the proposed amendment to defendant's answer and also a copy of the interrogatories addressed to the plaintiff.

After argument of counsel and due consideration by the court it is ordered, adjudged and decreed that each and all of said motions be disallowed and denied, to which action of the court the defendant duly excepted.

This order is entered prior to final decree of this date.

Mr. Williams: To that I have no objection. I was handed a copy of that. Did someone pick up that copy here? I don't find that.

Judge Burch: I will give you another copy, if you don't find that one. Just take this extra copy.

The said decree was thereupon signed by the court.

The Court: Have you gentlemen gotten together on the decree and finding of fact?

[fol. 587] Mr. Williams: Counsel undertook to let me have by one o'clock a copy of what they proposed, and they telephoned to Mr. Taylor that it was not available, and it was handed me here five or ten minutes after two, and there seems to have been the order which your Honor has hard, and also a proposed decree which I have not had an opportunity to read.

The Court: Well then, suppose I take a recess of ten or fifteen minutes to let you read it.

Mr. Williams: I think I had better.

The Court: All right, we will take a recess.

A short recess was had after which the hearing was resumed as follows:

Mr. Kalish: May it please your Honor, we have a decree prepared conforming to your Honor's decision, in which we have identified the various structures enjoined, first by reference to exhibit numbers of the devices which the plaintiff introduced through affidavits, and then also identified through the corresponding exhibits introduced by defendant as duplicates of plaintiff's exhibits which were introduced in connection with the taking of the testimony on behalf of the defendant.

I understand Mr. Williams' objection is primarily that these other exhibit numbers are included, and I must therefore explain why they are included.

As I think I stated briefly this morning, in taking testimony under the statute on behalf of the defendant, we did not have available the particular devices, the physical things which plaintiff introduced in evidence, and it was then and there agreed between Mr. Hansmann and myself that these devices which we did have in Philadelphia were in fact, and they are in fact, duplicates of the devices which plaintiff introduced, and which plaintiff represents are the things being sued upon. All of the defendant's testimony was based upon these devices which were available in Philadelphia. The question of their identity was not questioned then, was not questioned at the final hearing, was not questioned at any time until the case came to the Court of Appeals, and I think probably their identity may not be questioned now, and it seems to me this is a late date to question their identity, and therefore any effort to exclude these other exhibits and thereby to divorce all the evidence adduced on behalf of the defendant from this case, I think

is inappropriate. I think certainly the defendant should be entitled to that testimony which was adduced on its behalf, and except for these exhibits that would be divorced from this case.

[fol. 588] The Court: Is there any other difference between your decree and the one prepared by Mr. Williams?

Mr. Williams: Yes, sir.

Judge Burch: This last line under No. 8 should read: "And the same being exemplified." Does that meet your idea?

Mr. Williams: Really it does not. Counsel—I asked him during the recess to tell me why he wanted this change. He seemed disinclined to tell me, so that I would say to the court so far I have here just now for the first time heard what the reason for this proposition is. Here is a record of the Court of Appeals that contains the depositions that counsel refers to. They were taken in this case. They were filed in this case. The exhibits referred to in the deposition were filed in this case. If there be such a stipulation as counsel says there is, that something or other was identical with something else, why, that must be or can be in the Appellate Court, and I haven't the slightest purpose or intent, by any form of decree, to prevent the defendant from having available in this Court or the Court of Appeals or any other Court all of its evidence. It is in the record; the exhibits are in the record.

Now this is what I do object to; when we filed this suit, we came in shortly with some affidavits of two men, Cummings and Beezley, who said that they had purchased from the defendant an Exhibit "A," a gun thus and so, and an Exhibit "A" to another affidavit, thus and so, the physical things were identified and tagged and marked by the notary, and our suit was based upon proof of the sale of those particular devices and their appurtenances.

Now as Mr. Kalish says, the defendant went, as they had a right to do, to Philadelphia and took some depositions, and there offered in evidence quite a list of devices, with or without what stipulation I don't recall and I don't think it is in the least necessary to hunt them up now, and here are lists of five or six things of this kind, and of that kind, and the other kind, and as to some of those I haven't had time to check over. I suppose there are sixteen or twenty here. As to some of them it is my idea that the things

identified in Philadelphia, about which testimony was taken, are not like the ones which the evidence shows to have been sold by the defendant to these two witnesses whose testimony was stipulated as a part of the trial record.

Now what we have done in our proposed decree is to identify those devices. I guess I had better read a sample:

[fol. 589] "That the defendant, R. M. Hollingshead Company, has infringed eleven certain claims and violated the rights of the plaintiff thereunder by the sale of—

'a' compressors of the type exemplified in Exhibit A of the affidavit of D. A. Beezley of April 12, 1926."

That is what the prima facie proof of the plaintiff was on.

Now as contrasted with that, what the defendant is proposing is something like this:

"That the defendant is infringing, by the sale of compressors of the type exemplified in Exhibit A of the affidavit of D. A. Beezley of April 12, 1926"—and to that I have no objection; then they go on and say "The coupler element of said compressor of Exhibit A being illustrated in the drawing of plaintiff's exhibit 15, page 373, of the printed transcript of record on appeal." Now why that? That printed appeal record is no part of the record of this court, and why need we make it a part of this record when there is in this court a drawing, I presume the original of that particular drawing, and to which we refer in our decree. Then he goes on to say "And being further exemplified by defendant's Exhibit 8, 8-A, 8-B, 8-E, and defendant's Exhibit 41."

Now if those additional exhibits are identically the same thing there can be no value in having the thing identified half a dozen times over? If they differ, then why are we not entitled to have a decree directed to the thing which the proof shows to have been sold and upon which we based our suit?

Now seemingly in all of the other identifying paragraphs there is first the reference to the device originally sold as shown by the proof, and then supplemented with things just comparable with the one I have read "Constituting the device Exhibit 15 appearing on page 373 of the printed transcript of record on appeal, and further exemplified in defendant's exhibit No. 41 and another one."

The Court: Well, I don't conceive that to be a matter of great importance, one way or the other, but I will rule on that when I pass on the other matter. Now what is the second modification?

Mr. Williams: There is another modification. Our decree specifies that one of these devices infringes, and there is a contributory infringement of claims 14 and 15 of Gullborg patent. Counsel have added to that "Claims 1, 2, 5, 8 and 10"—we don't want that allegation.

The Court: If you didn't claim that——

[fol. 590] Mr. Williams: Why should that be decreed?

The Court: I will rule with you on that point.

Mr. Williams: Now as to the matter of the identification of various of these types, the importance of that is this: if I can turn—I think it is a matter of a good deal of importance—I have it here—we have a photograph of a so-called Zerk adapter that was sold with one of those guns, or the impression made by that adapter, it is generally of a spherical contour; I think that some of these things which the defendant is seeking now to have added, some of these exhibits probably show an adapter having a conical contour. Is that a fact as to some of these?

Mr. Kalish: The Zerk adapter, both what you introduced in evidence as well as what we introduced in evidence, was identical. Your conclusion as to their shape is incorrect. It seems to me the court must ultimately determine what the fact is as to that case, because it is that shape that apparently determine infringement. Now the devices are here, or should be here, and I think it is up to the court to decide that question of fact.

Mr. Williams: As counsel says, the devices which were sold to Cummings and Beezley are here as exhibits, and they show for themselves what their shape is or is not. Now to say that the defendant shall be enjoined, not only against the sale of the thing which they did sell, but some other, and as we think different things which they are putting in in connection with this deposition in Philadelphia and against which our suit was not directed and against which our claim was not made, and which I think was different from the one to which the suit was directed and which was made the basis—it was the sale in——

The Court: Well, the suit turns, of course, on the device you bought here.

Mr. Williams: I beg your pardon?

The Court: I say, the suit turns on the device you actually bought here.

Mr. Williams: I think, absolutely, and I would like that to be the thing which they are enjoined against selling, and not some different thing which we have not alleged constitutes infringement.

The Court: Well, we will pass from that. Now the second point——

Mr. Williams: Was the allegation.

The Court: Infringement of certain claims which you do not claim. Yes.

Mr. Williams: That is the second matter.

[fol. 591] The Court: Now what do you say about that, Mr. Kalish?

Mr. Kalish: The allegation of infringement of claims which they don't claim, I am willing to have that stricken out.

The Court: All right, you are together on that. That point is out of the way. Now what is the third point of difference?

Mr. Williams: When it comes to the part of this proposed decree that a writ of perpetual injunction issue forthwith against The R. M. Hollingshead Company, the proposed decree does not specify the form of a device which they are to be enjoined against selling. "Which is the apparatus hereinabove referred to." Now I think that is a matter of form. I haven't authority here to show whether the enjoining part of the decree should identify the things enjoined, but I have never seen a decree which did not identify them exclusivly, and I can see no possible objection to identifying them as does the form of decree which I have proposed.

Mr. Kalish: If your Honor please, I am agreeable. I merely provided for that in the interest of saving space.

The Court: All right, you are agreed on the third point. Now what is the fourth point?

Mr. Williams: Another is that they have for some reason modified the form of decree submitted by us. Our decree says they shall be enjoined against the sale or adoption of any device or devices adapted for use in systems or combinations embodying the inventions described and named, and so forth, whether for original equipment, or replacement, or otherwise. We copied into this decree form, because of some prior adjudications had in the Sixth

Circuit Court of Appeals in the Larkin and other cases, and our form read something like this: "'Either for original equipment or replacement under the guise of repairs or otherwise,'' which is identically the language which was approved by the Sixth Circuit Court of Appeals in the cases which were decided in 18 Federal, 2, and it is a form which has been incorporated——

The Court: There is practically no difference in the language there.

Mr. Kalish: Well, there is this difference. In one case in the Sixth Circuit which Mr. Williams speaks about there apparently was a situation where the defendant did something illegal in the guise of something legal, and that carries with it the implication of someone doing something un- [fol. 592] derhanded. That may have been the fact in those cases; it is not a fact here, so I see no reason why Hollingshead Company should be charged to be doing anything under the guise of something else unless that is a fact, and there is nothing here to support that.

The Court: Nothing in the record?

Mr. Kalish: No fact to support that intimation.

Mr. Williams: All I can say about that, your Honor, is that after the adjudication of these half a dozen or eight early cases in the Courts of Appeal, and where the language was as I have read it, we have, I suppose, secured the entry of probably one hundred or one hundred fifty decrees——

Mr. Kalish: Undefended.

Mr. Williams: But undefended——

The Court: Now don't address each other. If you have any remarks to make to one another, make them through the court.

Mr. Williams: Well, there has been one hundred or one hundred fifty of these decrees, some consented to, and I suppose some forty or fifty bitterly contested, in every one of which the language has been followed and incorporated. I have here those volumes that contain——

The Court: I don't see that that is a matter of great importance: It strikes me, just hearing that language read once, that either form accomplishes the purpose.

Mr. Williams: I would think so, but when we have a form that the court of Appeals have approved in so many of these cases, both in the Sixth Circuit and the Seventh——

The Court: Well, I think a little variation of language might improve judicial style. I will rule with the defendant on the fourth point. Now what is the other point?

Mr. Williams: I think there are no others.

The Court: You have agreed on the second and you have agreed on the third. I ruled with the defendant on the fourth.

And there is no fifth point, and that leaves the question of the exhibits, and I ruled with the plaintiff on that.

Mr. Williams: Very well.

Mr. Kalish: If your Honor please, we now have a series——

[fol. 593] Judge Burch: Perhaps we had better get this straightened out right now while it is fresh in the minds of everybody, this decree.

Mr. Kalish: Is it your Honor's position that this decree written by the defendant might be retained with the elimination of the exhibits, and with the reiteration of the things enjoined?

The Court: No, I agreed—no, the elimination of the claims. Now on the third point I—you get together on that. What that come down to.

Mr. Williams: If the court please——

The Court: I think it is the thing to do is to take Mr. Williams' decree except as it has in there——

Mr. Williams: About the "guise."

The Court: Leave that out, that word "guise" and so forth.

Mr. Kalish: Your Honor, at this point I think we ought to have an understanding about how this leaves the case. Can we reach the same position? Certain evidence was adduced——

The Court: Well, if that evidence introduced at Philadelphia was covered by a stipulation that it was the same, when the thing is argued it will be better than—and I cannot hunt this device up this afternoon and say whether they are; I would not know whether they are the same, would not if I were to look at them. But the matter involved is the device—what was ultimately enjoined are the devices that the plaintiff bought here, so I will rule with the plaintiff on that and we will adopt the plaintiff's form of decree except as to the fourth point raised in which I adopt your language instead of Mr. Williams' language.

Mr. Kalish: Now we have the last thing before the court, findings of fact, and in that connection I think I would just like to call your Honor's attention, if I may, to an excerpt from a recent decision of Judge Denison in the case entitled Briggs v. United States, decided December 11, 1930, in which Judge Denison mentioned for the first time, gives any indication of the scope of Rule 70½, and this is what Judge Denison said:

"Briggs appeals from an order "Padlocking (Title 27, Section 33, U. S. C. A.) his cafe-cabaret night club in Detroit. Proofs were taken in open court, and a duly settled narrative statement of evidence is returned.

"This is an equity proceeding. The recent Supreme Court rule (Equity rule 70½, June 2, 1930) requires that the Trial Judge make finding of facts and law. Lacking [fol. 594] any exposition of that rule by the Supreme Court, we do not understand that it contemplates, in the ordinary equity case, all the proceedings and formalities which attend such findings in suits at law. Until it is otherwise authoritatively held, we shall think the rule satisfied by a clear and concise statement by the judge—whether called findings or opinion—which shows that he regards as the essential facts and the applicable rules of law. The present record lacks even this; but the rule," the judge goes on to say that the rule——

The Court: I understand.

Mr. Kalish: Is so recent that he will not rule against it on that.

The Court: Yes, I understand.

Mr. Kalish: Now the essential facts, and it didn't make a great deal of difference whether your Honor gathers those facts from plaintiff's set of devices, or defendant's set of devices, the essential facts are these; as to the Gullborg patent, it is essential, as a matter of fact, whether the couplers forming parts of the defendant's structures are of the sectional type, or of the nonsectional type. Whether they are couplers with that self-cleansing action upon which Judge Denison, in the Sixth Circuit, sustained claims 1 to 8 inclusive. Or whether they did not have that suction. As to the Zerk patent it is essential to know as a fact, whether the defendant's device has the spherical contact surface required by each of the three claims in suit of the Zerk patent, or whether it has some other kind of surface; con-

ical, or hexagonal, or any other kind, and I have here a series of findings of fact which I would like to read your Honor, and they are very brief.

The Court: Have you and Mr. Williams gone over your findings of fact together?

Mr. Kalish: Yes, but we have not agreed by any means.

The Court: But you have gone over them, have you?

Mr. Kalish: Yes.

Mr. Williams: I have looked at them and tried to find out what the reason for the change was, and counsel seems disposed to tell the court, rather than me.

The Court: Well, the reason we took the recess was for you gentlemen to get together as near as possible, save me from passing on some matters that are not as fresh in mind as they might be.

Thereupon another recess of a few minutes was taken, after which the hearing proceeded further as follows:

[fol. 595] Mr. Kalish: May it please your Honor, I think we are in agreement on some things, and the others we find we cannot agree on.

The Court: All right. That is what I want to thresh out, what you are not agreed on.

Mr. Kalish: I agree, in order to simplify the thing, to eliminate reference to the defendant's exhibits.

The Court: All right.

Mr. Kalish: As to which Mr. Williams objects.

The Court: Very well.

Mr. Kalish: So that the first finding of fact is agreed to. And I just have this one suggestion to make, that instead of identifying that drawing plaintiff's exhibit as Exhibit J of the plaintiff's affidavit, which does not—I mean, it is not known in this case as Exhibit J, it is known in this case as plaintiff's Exhibit 15, I think it ought to carry that exhibit number which it has in this court. And as to finding No. 2——

Mr. Williams: Well, we are agreed only about striking out this matter. I am not agreeing to the rest of that.

Mr. Kalish: What are you agreeing to?

Mr. Williams: We both agree that we might strike out this reference to the transcript on appeal and so on. I am not agreeing to the rest of this.

Mr. Kalish: You are not agreeing to the rest of this?

Mr. Williams: No.

Mr. Kalish: Then you are not agreeing to anything.

Mr. Williams: No.

The Court: All right, each of you read your first finding of fact and I will settle it.

Mr. Williams: I wonder if I might hand you a copy that I have drafted? (Document handed to the court.)

Mr. Kalish: I will just mark what I am willing to agree on here, by agreement.

Mr. Williams: I wonder if I might say that I am sure that the authorities are to this effect, that this finding of fact should be a finding of ultimate facts, and not evidentiary matter.

The Court: I think that is undoubtedly the rule. Furthermore I think that more particularly would be required in a patent suit than in closing up a speakeasy, or injunction. I don't think the rule, the great liberality of that rule would apply in litigation of this sort. I interpreted that opinion of Judge Denison's to be that every time I closed a speak- [fol. 596] easy I would have to give in an informal way, a finding of fact that he had been selling liquor there contrary to law, and the conclusion of law was that he had violated the Volstead Act, and no great formality would be required. But I imagine in a case where things of this kind are involved, that you would have to have a little more formal finding of fact than in a speakeasy case, or night club case. All right, now let's see.

Mr. Kalish: The first finding of fact which we request is that this coupler which is identified as Exhibit A of the affidavit of D. A. Beezley, and also shown by the plaintiff in its drawing Exhibit 15, is of the suctional type shown in the drawings of the patent and described in the specifications and covered by these claims. Now that happens to be a fact that has been plaintiff's contention; it is the basis upon which that appliance was enjoined, and I can see no reason why that fact should not be stated.

No. 2 refers to the second bayonet coupler which is plaintiff's Exhibit A of the Cummings affidavit, and that appliance undoubtedly is of the non-suctional type so far as the evidence in this case points. The coupler does not have the suctional type construction as required by those particular claims, in the opinion of Judge Denison. That second coupler was testified to and its non-suctional char-

acter was never questioned by anybody, including the plaintiff.

The third is as to the character of the Zerk type push contact nozzle which plaintiff has introduced in evidence. I believe that that appliance ought to be examined by the court, if it is to be passed upon, unless there is an agreement here.

And fourth, is the point as to which there is evidence in the case which is not contradicted or controverted by anybody and that is that notwithstanding the so-called suction effect coupler of plaintiff's Exhibit A to the Beezley affidavit, that coupler is incapable of producing any suction in conjunction with pumps of the character defendant is charged with selling, because those, producing two or three thousands of pounds of pressure, have no means provided within them for relieving that enormous pressure prior to uncoupling, hence the minute suction produced within the coupler is overcome a thousand fold by the pressure of the pump, and hence no effective suction can be produced. The evidence in the case on that point is clear and uncontroverted and I see no reason why the court should not find that as a fact, because it is an essential element of the decision.

[fol. 597] Mr. Williams: I would like to take these things up in the reverse order. As to the fourth finding, that is an evidentiary matter. At best it was—I don't care in the least what counsel says, I think their pumps can be operated in such a way that the suction is utilized, and whether or not it is utilized goes merely to the question of infringement. The Exhibit is not here, and your Honor will remember the hours that we spent in the demonstration of this apparatus.

The Court: Yes, I remember the demonstration.

Mr. Williams: I don't think it is in the least necessary for the court to take the time to re-settle the controversy. It was settled by the conclusions of the court, in its opinion, and I can't for the life of me see that anything is to be gained by rearguing that matter before your Honor. Now the third one goes to the question of whether the device has a spherical surface, or a conical surface. We say it is substantially spherical, and counsel says it is conical, or substantially conical. Well, the physical thing is in evidence as a part——

The Court: It will be there at the Court of Appeals.

Mr. Williams: Absolutely.

The Court: Now what do you say about No. 2?

Mr. Williams: My main objection to No. 2 is that that starts off to and decides these evidentiary matters, and the ultimate fact is the thing. The only thing that is important—I do not think the first two are so important except as they lead to No. 4, and if we are going to be consistent, why try to cover any of these matters in any of those findings? I can't see why we should.

The Court: Well now, what objection have you got, except for the admission of these four findings of fact, to the findings of fact and conclusions of law presented by the plaintiff?

Mr. Kalish: My objections are primarily these, they provide a series of findings of fact on things which are not at all an issue, never were in issue. In other words here we have six pages of findings of fact on the very things which have not been in issue. I will leave it to the court's judgment as to what the purpose of what may be, but certainly it can have no useful purpose. Now I say this, the question or title is not in issue, and there is no need in discussing that. The question of validity is one which the court decided in its decree. That is not a fact. It is a finding of law—that is, its decision, and so on straight down, the facts that——

The Court: Your objections cover 1, 2, 3, 4, 5, 6.——

[fol. 598] Mr. Kalish: And 7 and 8. We are not interested with the state of incorporation of anybody. That is not in issue. Now we come down to 8—9, and the only thing that is found there is the decree of the court. The court has decreed as a matter of its final decision that the Hollingshead Company sold these things without authority. Well, that is just the decision itself. Now what are the facts which caused the court to hold that the Hollingshead Company had no authority? Because these devices were painted green, or because they were long or short, or what were the things about the devices which make them infringements? In other words, this is nothing more than a reiteration in different language of the decree.

The Court: Well, I am going to adopt the plaintiff's form. Note your exception. Now if you will prepare the decree as suggested by me you can have Mr. Taylor and Judge Burch present that Monday.

Mr. Kalish: May I ask your Honor that we be permitted to submit as part of our record the proposed findings of fact which we submitted?

The Court: Certainly.

The said proposed findings of facts submitted by the defendant are as follows:

1. That the defendant's coupler, exemplified in and forming a part of plaintiff's exhibit A of the affidavit of D. A. Beezley of April 12, 1926, and also exemplified in defendant's exhibit No. 41, and also illustrated in the drawing constituting plaintiff's exhibit 15 appearing on page 373 of the printed transcript of record on appeal, is a coupler of the "suctional" type shown in the drawings of Gullborg Patent No. 1307734 and described in the specification thereof and variously defined in claims 1, 2, 3, 4, 5, 6, 8 and 10 thereof.

2. That defendant's coupler, exemplified in and forming a part of Exhibit A of the affidavit of O. A. Cumming of September 13, 1926 and also exemplified in defendant's Exhibit 6c and illustrated in the drawing constituting plaintiff's Exhibit 16 appearing on page 274 of the printed transcript of record on appeal, does not embody the suction-producing construction shown in the drawings of the Gullborg Patent No. 1307734 and described in the specification of said patent and variously defined in claims 1, 2, 3, 4, 5, 6, 8 and 10 of said patent.

3. That defendant's push-contact type nozzle (for use in conjunction with defendant's lubricant compressor) ex- [fol. 599] emplified in Exhibit A of affidavit of O. A. Cumming of September 13, 1926, and also exemplified in defendant's Exhibits Nos. 45 and 45a and also illustrated in the drawings constituting defendant's Exhibit No. 47, has a contact surface which is not spherical but which is conical.

4. That defendant's coupler, referred to in paragraph 1 hereof, is incapable of effecting any "suction" or "self-cleansing" result, when associated with either defendant's service type compressor exemplified in Exhibit A of Beezley affidavit and in defendant's Exhibit 8a or with defendant's handy-shop type compressor exemplified in Exhibit A of Cumming affidavit and in defendant's Exhibit 6 and

illustrated in plaintiff's Exhibit 16, because said defendant's compressors are not provided with any means for relieving or stopping, prior to uncoupling, any heavy grease pressure produced by the compressor.

The Court: Now have you your decree ready now?

Mr. Williams: I think we have, have we not, Mr. Burch?

Judge Burch: So far as I know. There was only one change to be made.

The Court: That was striking out that "under the guise" proposition.

Judge Burch: The technical side I don't understand, but if I am correct about it there was only one change your Honor made in the plaintiff's decree and that was on page 4 line 7, you struck out the words "Under the guise of repairs."

Mr. Williams: "Under the guise of repairs"?

The Court: Yes. Now where is that?

Judge Burch: Seventh line. Isn't that right, Mr. Kalish?

Mr. Kalish: That is right. The order allowing an appeal will be taken care of as a matter of course, will it?

The Court: Oh, yes.

Thereupon court was adjourned.

[fol. 600] IN UNITED STATES DISTRICT COURT

DECREE—Entered Nov. 19, 1932. H. B. Anderson, Judge.

This cause having been heard before the court at final hearing, testimony of witnesses having been heard in open court, and depositions having been filed by both parties, counsel for the respective parties having been heard; and the court having been fully advised in the premises and having entered its order of May 25, 1928, confirming the report of the Standing Master and ordering that the temporary injunction hereinbefore issued be made perpetual; and appeals having been taken by both parties from said order, and the mandates of the United States Circuit Court of Appeals for the Sixth Circuit having been handed down dismissing said appeals and remanding the cause to this

court for further proceedings in conformity with the opinion rendered by said Circuit Court of Appeals; and the cause again having come before this court for settlement of the decree,

The court hereby finds:

(1) That the plaintiff, The Bassick Manufacturing Company, is the owner of United States Letters Patent to Arthur V. Gullborg, No. 1,307,734 of June 24, 1919, and to Oscar Zerk No. 1,475,980 of December 4, 1923; the inventions disclosed therein and of all rights and privileges under the said Letters Patent.

(2) That both of said Letter Patent are good and valid in law as to claims 1, 2, 3, 4, 5, 6, 8, 10, 14 and 15 of Gullborg patent No. 1,307,734, and claims 2, 3 and 5 of Zerk patent No. 1,475,980.

(3) That the defendant, The R. M. Hollingshead Company, has infringed claims 1, 2, 3, 4, 5, 6, 8, 10, 14 and 15 of said Gullborg patent No. 1,307,734 and violated the rights of the plaintiff thereunder by the sale of:

(a) Compressors of the type exemplified in Exhibit A of the affidavit of D. A. Beezley of April 12, 1926.

(b) Compressors of the handy shop type exemplified in Exhibit A of the affidavit of O. A. Cumming of September 13, 1926, and illustrated in the drawing exhibit K of the affidavit of Ernest W. Davis of October 21, 1926.

(4) That the defendant, The R. M. Hollingshead Company, has infringed claims 1, 2, 3, 4, 5, 6, 8, 10, 14 and 15 of said Gullborg patent No. 1,307,734, and violated the rights of the plaintiff thereunder by the sale of couplers of [fol. 601] the type exemplified in Exhibit A submitted with the affidavit of D. A. Beezley of April 12, 1926, and illustrated in the drawing exhibit J of the affidavit of Ernest W. Davis of October 21, 1926.

(5) That the defendant, The R. M. Hollingshead Company, has infringed claims 14 and 15 of said Gullborg patent No. 1,307,734, and violated the rights of the plaintiff thereunder by the sale of couplers of the type exemplified in Exhibit A of the affidavit of O. A. Cumming of September 13, 1926, and as illustrated in the drawing Exhibit K of the affidavit of Ernest W. Davis of October 21, 1926.

(6) That the defendant, The R. M. Hollingshead Company, has infringed claims 2, 3, and 5 of the said Zerk patent No. 1,475,980 and violated the rights of the plaintiff thereunder by the sale of lubricant compressors and Zerk adapters of the type exemplified in Exhibit A of the affidavit of O. A. Cumming of September 13, 1926.

Wherefore, it is ordered, adjudged and decreed:

(1) That a writ of perpetual injunction issue forthwith under the seal of this court enjoining and restraining the defendant, The R. M. Hollingshead Company, its officers, agents, employees, associates and confederates from making, using or selling any of the forms or parts of lubricating apparatus hereinabove referred to, and particularly:

(a) Compressors of the type exemplified in Exhibit A of the affidavit of D. A. Beezley of April 12, 1926.

(b) Compressors of the handy shop type exemplified in Exhibit A of the affidavit of O. A. Cumming of September 12, 1926, and illustrated in the drawing Exhibit K of the affidavit of Ernest W. Davis of October 21, 1926.

(c) Couplers of the type exemplified in Exhibit A submitted with the affidavit of D. A. Beezley of April 12, 1926, and illustrated in the drawing Exhibit J of the affidavit of Ernest W. Davis of October 21, 1926.

(d) Couplers of the type exemplified in Exhibit A of the affidavit of O. A. Cumming of September 13, 1926, and as illustrated in the drawing Exhibit K of the affidavit of Ernest W. Davis of October 21, 1926.

(e) Lubricant compressors and Zerk adapters of the type exemplified in Exhibit A of the affidavit of O. A. Cumming of September 13, 1926.

And/or any other device or devices embodying the inventions described and claimed in claims 1, 2, 3, 4, 5, 6, 8, 10, 14 and/or 15 of Gullborg patent No. 1,307,734, and/or claims 2, 3 and/or 5 of Zerk patent No. 1,475,980 and/or [fol. 602] any of the parts thereof and/or any other device or devices adapted for use in systems or combinations embodying the same, either for original equipment or for replacement or otherwise, and from offering or advertising so to do, and from aiding or abetting or in any way con-

tributing to the infringement of the said claims of the said patents, or either of them.

(2) That plaintiff recover from the defendant, The R. M. Hollingshead Company, the damages which the plaintiff has suffered from the profits which the said defendant has made by reason of its infringement of the said Letters Patent, and that this cause be referred to A. G. Riley, Esq., as Special Master of this court, to take and report an account of such damages and profits, and that the said defendant and the officers, agents, clerks and employees are required to attend before the said Master from time to time as he shall direct and to produce before him all such books, papers, vouchers, documents and devices, and to submit to such oral examination as he may direct.

(3) That plaintiff recover from the defendant its costs and disbursements of this suit to be taxed by the clerk, and that the plaintiff have execution therefor against the said defendant.

November 19th, 1932.

IN UNITED STATES DISTRICT COURT

FINDINGS OF FACT AND CONCLUSIONS OF LAW—Filed Nov. 19, 1932

This cause having been heard at final hearing upon the record and proceedings herein, and upon the tesimony of witnesses heard in open court, counsel for the respective parties having been heard and the court, being fully advised in the premises, files the following findings of fact and conclusions of law in accordance with Equity Rule 70½.

[fol. 603] Findings of Fact

1. That Arthur V. Gullborg was the original, first and sole inventor of the subject matter of United States Letters Patent No. 1,307,734 for Lubricating Means.

2. That the said Gullborg Letters Patent No. 1,307,734 were granted on June 24, 1919, to the said Arthur V. Gullborg.

3. That the said Gullborg patent No. 1,307,734 was subsequently assigned by mesne assignments to The Bassick Manufacturing Company, plaintiff herein.

4. That Oscar Zerk was the original, first and sole inventor of the subject matter of United States Letters Patent No. 1,475,980 for Lubricating Apparatus.

5. That the said Zerk Letters Patent No. 1,475,980 were granted on December 4, 1923, to the Allyne-Zerk Company of Cleveland, Ohio.

6. That the said Zerk patent No. 1,475,980 was assigned by the Allyne-Zerk Company to The Bassick Manufacturing Company, plaintiff herein.

7. That the plaintiff, The Bassick Manufacturing Company, is a corporation organized and existing under and by virtue of the laws of the State of Delaware, having its principal place of business at Chicago, in the County of Cook and State of Illinois.

8. That the defendant, The R. M. Hollingshead Company, is a corporation organized and existing under and by virtue of the laws of the State of New Jersey, having a regular and established place of business at Memphis, in the county of Shelby and State of Tennessee.

9. That the defendant, The R. M. Hollingshead Company, sold without authority

(a) compressors of the type exemplified in Exhibit A of the affidavit of D. A. Beezley of April 12, 1926;

(b) couplers of the type exemplified in Exhibit A submitted with the affidavit of D. A. Beezley of April 12, 1926, and illustrated in the drawing Exhibit J of the affidavit of Ernest W. Davis of October 21, 1926;

(c) compressors of the handy shop type exemplified in Exhibit A of the affidavit of O. A. Cumming of September 13, 1926, and illustrated in the drawing Exhibit K of the affidavit of Ernest W. Davis of October 21, 1926;

(d) couplers of the type exemplified in Exhibit A of [fol. 604] the affidavit of O. A. Cumming of September 13, 1926, and as illustrated in the drawing Exhibit K of the affidavit of Ernest W. Davis of October 21, 1926.

(e) lubricant compressors and Zerk adapters of the type exemplified in Exhibit A of the affidavit of O. A. Cumming of September 13, 1926.

10. That the plaintiff, The Bassick Manufacturing Company, has complied with the United States Statutes relating to marking patented devices manufactured and sold by it.

Conclusions of Law

1. That this court has had, during the pendency of this suit, and still has, jurisdiction of the matter in controversy.

2. That the plaintiff, The Bassick Manufacturing Company, is the owner of United States Letters Patent Nos. 1,307,734 and 1,475,980, dated June 24, 1919, and December 4, 1923, respectively, the inventions disclosed therein and of all rights and privileges under the said Letters Patent, including all rights of recovery for past infringement of said Letters Patent.

3. That the said Letters Patent Nos. 1,307,734 and 1,475,980, granted to Arthur V. Gullborg and Oscar Zerk respectively, are good and valid in law.

4. That the said Gullborg patent No. 1,307,734 and Zerk patent No. 1,475,980 are not anticipated by any defense raised by The R. M. Hollingshead Company.

5. That the defendant, The R. M. Hollingshead Company, has infringed claims 1, 2, 3, 4, 5, 6, 8, 10, 14 and 15 of said Gullborg patent No. 1,307,734 and violated the rights of the plaintiff thereunder by the sale of

(a) compressors of the type exemplified in Exhibit A of the affidavit of D. A. Beezley of April 12, 1926;

(b) compressors of the handy shop type exemplified in Exhibit A of the affidavit of O. A. Cumming of September 13, 1926, and illustrated in the drawing Exhibit K of the affidavit of Ernest W. Davis of October 21, 1926.

6. That the defendant, The R. M. Hollingshead Company, has infringed claims 1, 2, 3, 4, 6, 8, 10, 14 and 15 Gullborg patent No. 1,307,734 and violated the rights of the plaintiff thereunder by the sale of couplers of the type exemplified [fol. 605] in Exhibit A submitted with the affidavit of D. A. Beezley of April 12, 1926, and illustrated in the drawing Exhibit J of the affidavit of Ernest W. Davis of October 21, 1926.

7. That the defendant, The R. M. Hollingshead Company, has infringed claims 14 and 15 of said Gullborg patent No. 1,307,734 and violated the rights of the plaintiff thereunder by the sale of couplers of the type exemplified in Exhibit A of the affidavit of O. A. Cumming of September 13, 1926, and as illustrated in the drawing Exhibit K of the affidavit of Ernest W. Davis of October 21, 1926.

8. That the defendant, the R. M. Hollingshead Company, has infringed claims 2, 3, and 5 of the said Zerk patent No. 1,475,980 and violated the rights of the plaintiff thereunder by the sale of lubricant compressors and Zerk adapters of the type exemplified in Exhibit A of the affidavit of O. A. Cumming of September 13, 1926.

9. That the plaintiff is entitled to a writ of permanent injunction under the seal of this court enjoining and restraining the defendant, The R. M. Hollingshead Company, its officers, agents, employees, associates and confederates, from making, using or selling any of the forms or parts of lubricating apparatus hereinabove referred to, and particularly:

(a) compressors of the type exemplified in Exhibit A of the affidavit of D. A. Beezley of April 12, 1926;

(b) compressors of the handy shop type exemplified in Exhibit A of the affidavit of O. A. Cumming of September 13, 1926, and illustrated in the drawing Exhibit K of the affidavit of Ernest W. Davis of October 21, 1926;

(c) couplers of the type exemplified in Exhibit A submitted with the affidavit of D. A. Beezley of April 12, 1926, and illustrated in the drawing Exhibit J of the affidavit of Ernest W. Davis of October 21, 1926;

(d) couplers of the type exemplified in Exhibit A of the affidavit of O. A. Cumming of September 13, 1926, and as illustrated in the drawing Exhibit K of the affidavit of Ernest W. Davis of October 21, 1926;

(e) lubricant compressors and Zerk adapters of the type exemplified in Exhibit A of the affidavit of O. A. Cumming of September 13, 1926;

[fol. 606] and/or any other device or devices embodying the inventions described and claimed in claims 1, 2, 3, 4, 5, 6, 8, 10, 14 and/or 15 of Gullborg patent No. 1,307,734 and/or claims 2 3 and/or 5 of Zerk patent No. 1,475,980 and/or any of the parts thereof, and/or any other device or devices adapted for use in systems or combinations embodying the same, either for original equipment or for replacement under the guise of "repairs" or otherwise, and from offering or advertising so to do, and from aiding or abetting or in any way contributing to the infringement of the said claims of the said patents, or either of them.

10. That the plaintiff is entitled to recover from the fendant, The R. M. Hollingshead Company, the prof which the said defendant has made and the damages which the plaintiff has suffered by reason of the defendant's infringement of the Letters Patent in suit, and to recover its costs and disbursements of this proceeding in accordance with the statutes and rules in such cases made and provided.

H. B. Anderson, United States District Judge.

IN UNITED STATES DISTRICT COURT

PETITION FOR APPEAL—Filed Dec. 16, 1932

To the Honorable Harry B. Anderson, United States District Judge:

The above named defendant, The R. M. Hollingshead Company, conceiving itself aggrieved by:

(1) The decree of this Court entered in the above entitled cause on May 25th 1928;

(2) The further order or decree of this Court entered in the above entitled cause on June 23, 1928;

(3) The order of this Court entered in the above entitled cause on November 19th, 1932, disallowing and denying defendant's motion—

[fol. 607] (a) for an order making the decree of the United States District Court of Appeals for the Sixth Circuit, in this cause, the decree of the District Court; and

(b) to set aside the decrees of this Court entered May 25, 1928 and June 23, 1928, respectively, and the injunctions based thereon; and

(c) to restore this cause to the docket of this Court to be heard on its merits, without any question herein being foreclosed; and

(d) to amend defendant's answer to plead in defense, certain prior art patents Nos. Reissue 18,123; Reissue 18,278 and No. 1,816,022, as constituting newly discovered evidence, and also certain other prior art patents; and

(e) for leave to file interrogatories respecting said newly discovered prior art patents; and

(4) The decree of this Court entered in the above entitled cause on November 19, 1932;

does hereby appeal from said decrees and order, to the United States Circuit Court of Appeals for the Sixth Circuit, for the reasons set forth in the Assignment of Errors filed herein, and it prays that its appeal be allowed and that citation be issued as provided by law, and that a transcript of the record and proceedings, and documents and exhibits upon which said decrees are based, duly authorized, be sent to the United States Circuit Court of Appeals for the Sixth Circuit, sitting at Cincinnati, Ohio, under the rules of said Court in such cases made and provided.

The R. M. Hollingshead Company, by Leonard L. Kalish, Its Solicitor and Counsel. Burch Minor & McKay, of Counsel.

[fol. 608] IN UNITED STATES DISTRICT COURT

ORDER ALLOWING APPEAL—Entered Dec. 16, 1932

On this day, came the parties by their solicitor and counsel, and, on motion of solicitor and counsel for The R. M. Hollingshead Company, defendant, it is

Ordered as follows: That the appeal to the United States Circuit Court of Appeals for the Sixth Circuit from the decrees of this Court entered and filed in this cause on May 25, 1928; June 23, 1928; and November 19th, 1932, respectively, be, and the same is hereby allowed, and that a citation issue as provided by law, and that so much of the transcript of record herein as is necessary and essential to the proper presentation thereof be forthwith transmitted to the said United States Circuit Court of Appeals for the Sixth Circuit, and it is further

Ordered that the bond on appeal be fixed in the sum of Two Hundred Fifty ($250.00) Dollars.

H. B. Anderson, United States District Judge.

Dated this 16th day of December, 193-.

IN UNITED STATES DISTRICT COURT

ASSIGNMENT OF ERRORS—Filed Dec. 16, 1932

Now comes the defendant in the above entitled cause, and says that in the record and proceedings of this Court, and that in the decrees of this Court entered in the above entitled cause on May 25, 1928, June 23, 1928, and November 19, 1932, respectively, there is manifest error, to wit:

1. The Court erred in sustaining the Bill of Complaint and making and entering a decree in conformity with the prayers thereof.

2. The Court erred in making and entering said decree of May 25, 1928.

[fol. 609] 3. The Court erred in making and entering said decree of June 23, 1928.

4. The Court erred in not vacating and setting aside said decrees of May 25, 1928 and June 23, 1928, respectively, and the injunctions based thereon, in conformity with the mandates of the United States Circuit Court of Appeals, dated January 7, 1932, and filed in the District Court in this cause on January 9, 1932.

5. The Court erred in entering the order of November 19, 1932 denying defendant's motions.

6. The Court erred in disallowing and denying defendant's motions:

(a) for an order making the decree of the United States District Court of Appeals for the Sixth Circuit, in this cause, the decree of the District Court; and

(b) to set aside the decrees of this Court entered May 25, 1928 and June 23, 1928, respectively, and the injunctions based thereon, and

(c) to restore this cause to the docket of this Court to be heard on its merits, without any question herein being foreclosed; and

(d) to amend defendant's answer to plead in defense, certain prior art patents Nos. Reissue 18,123; Reissue 18,278 and No. 1,816,022, as constituting newly discovered evidence, and also certain other prior art patents; and

(e) for leave to file interrogatories respecting said newly discovered prior art patents.

7. The Court erred in making and entering said decree of November 19, 1932, finding the patents in suit valid and infringed, and ordering an injunction and an accounting.

8. The Court erred in adopting, making and entering as its findings of fact "The Findings of Fact and Conclusions of Law" as submitted by plaintiff.

9. The Court erred in failing to give and state its findings of fact and conclusions of law as required by Equity Rule No. 70½ promulgated by the Supreme Court of the United States.

10. The Court erred in failing to give findings of fact in substantial accordance with the findings of fact as proposed by defendant.

11. The Court erred in finding and holding claims 1, 2, 3, 4, 5, 6, 8 and 10 of Gullborg patent No. 1,307,734, valid.

[fol. 610] 12. The Court erred in finding and holding claims 14 and 15 of the Gullborg patent No. 1,307,734, valid.

13. The Court erred in finding and holding claims 2, 3 and 5 of Zerk patent No. 1,475,980, valid.

14. The Court erred in finding and holding that defendant infringed claims 1, 2, 3, 4, 5, 6, 8 and 10 of said Gullborg patent No. 1,307,734, and violated the rights of plaintiff thereunder by the sale of compressors of the type exemplified in Exhibit A of the Affidavit of D. A. Beezley, of April 12, 1926, (the "coupler" element of said compressor being illustrated in the drawing of plaintiff's Exhibit 15).

15. The Court erred in finding and holding that defendant infringed claims 14 and 15 of said Gullborg patent No. 1,307,734, and violated the rights of plaintiff thereunder by the sale of compressors of the type exemplified in Exhibit A of the Affidavit of D. A. Beezley, of April 12, 1926, (the "coupler" element of said compressor being illustrated in the drawing of plaintiff's Exhibit 15).

16. The Court erred in finding and holding that defendant infringed claims 1, 2, 3, 4, 5, 6, 8 and 10 of said Gullborg patent No. 1,307,734, and violated the rights of plaintiff thereunder by the sale of compressors of the handy shop type exemplified in Exhibit A of the Affidavit of O. A. Cumming, of September 13, 1926, and illustrated in the drawing Exhibit K of the Affidavit of Ernest W. Davis, of October 21, 1926 (said drawing being plaintiff's Exhibit 16).

17. The Court erred in finding and holding that defendant infringed claims 14 and 15 of said Gullborg patent No. 1,307,734, and violated the rights of plaintiff thereunder by the sale of compressors of the handy shop type exemplified in Exhibit A of the Affidavit of O. A. Cumming, of September 13, 1926, and illustrated in the drawing Exhibit K of the Affidavit of Ernest W. Davis, of October 21, 1926 (said drawing being plaintiff's Exhibit 16).

18. The Court erred in finding and holding that defendant infringed claims 1, 2, 3, 4, 5, 6, 8, 10, 14 and 15 of said Gullborg patent No. 1,307,734, and violated the plaintiff's rights thereunder by the sale of couplers of the type exemplified in Exhibit A submitted with the Affidavit of D. A. Beezley, of April 12th, 1926, and illustrated in the drawing Exhibit J of the Affidavit of Ernest W. Davis of October 21, 1926 (said drawing being plaintiff's Exhibit 15).

[fol. 611] 19. The Court erred in finding and holding that defendant infringed claims 14 and 15 of said Gullborg patent No. 1,307,734 and violated the rights of plaintiff there-

under, by the sale of couplers of the type exemplified in Exhibit A of the Affidavit of O. A. Cumming, of September 13, 1926, and as illustrated in the drawing Exhibit K of the Affidavit of Ernest W. Davis, of October 21, 1926 (said drawing being plaintiff's Exhibit 16).

20. The Court erred in finding and holding that defendant infringed claims 2, 3 and 5 of the Zerk patent No. 1,475,980 and violated the rights of plaintiff thereunder, by the sale of lubricant compressors and Zerk adapters of the type exemplified in Exhibit A of the Affidavit of O. A. Cumming of September 13, 1926.

21. The Court erred in enjoining defendant, its officers, agents, employees, associates and confederates, from making, using, or selling any of the forms or parts of lubricating apparatus hereinabove referred to in assignments numbered 14, 15, 16, and 17 hereof.

22. The Court erred in enjoining and restraining defendant, its officers, agents, employees, associates and confederates, from making, using or selling "any other device or devices embodying the inventions described and claimed in claims 1, 2, 3, 4, 5, 6, 8, 10, 14 and/or 15 of Gullborg patent No. 1,307,734 and/or claims 2, 3 and/or 5 of Zerk patent No. 1,475,980, and/or any of the parts thereof."

23. The Court erred in enjoining and restraining the defendant, its officers, agents, employees, associates and confederates, from making, selling or using "any other device or devices adapted for use in systems or combinations embodying the inventions of the hereinabove specified claims of said Gullborg patent and said Zerk patent, either for original equipment or for replacement, or otherwise."

24. The Court erred in holding, in confirmation of the Master's report and in overruling defendant's exceptions thereto, that the manufacture, sale and/or use by defendant of grease dispensing pumps or compressors equipped with bayonet type of conduit couplers of the type and character exemplified in Defendant's Exhibits "A," "B" and "F" before the Master, constitutes contributory infringement of claims 14 and/or 15 of the Gullborg patent No. 1,307,734.

25. The Court erred in holding, in effect, that the manufacture, sale and/or use of any old and unpatented grease dispensing pump or compressor having any old and un-

[fol. 612] patented bayonet type of conduit coupler thereon for connection with grease cups manufactured and sold by plaintiff according to the Gullborg Patent No. 1,307,733, constitutes contributory infringement of claims 14 and 15 of the Gullborg Patent No. 1,307,734.

26. The Court erred in holding, in effect, that the manufacture, sale and/or use of any old and unpatented grease dispensing pump or compressor having any old and unpatented contact type of discharge nozzle thereon for connection with certain unpatented grease cups of the general type disclosed in Figure 3 of Zerk Patent No. 1,475,980, manufactured and sold by plaintiff, constitutes contributory infringement of claims 2, 3 and 5 of the Zerk Patent No. 1,475,980.

27. The Court erred in not adjudging plaintiff to have violated the spirit, intent and terms of the Clayton Act (38 Stat. 731; U. S. Comp. Stat., Sec. 8835c).

28. The Court erred in deciding, in effect, that a patent owner, having manufactured and sold a patented article, may prohibit the proper and only possible use of that article, by virute of his ownership of another patent covering that article in combination with the ordinary and unpatented thing with which it must necessarily be used, and without which the patented article would have no utility at all.

29. The Court erred in failing to hold that plaintiff's vendees of the so-called "pin-fittings," manufactured and sold by plaintiff under its Gullborg patent No. 1,307,733, (not in suit), have an implied license to use such "pin-fittings" for the normal purpose and in the normal manner intended and required by the structure of said "pin-fittings," and that in the exercise of this right and license the vendee is at liberty to employ any of the ordinary old and unpatented devices or things of the prior art with which said "pin-fittings" may be used for the attainment of their intended utility.

30. The Court erred in deciding, in effect, that one, having manufactured and sold an unpatented article, may prohibit the proper and only possible use of that article, by virtue of his ownership of a patent covering that article in combination with the ordinary and unpatented things

with which it must necessarily be used and without which the article would have no utility at all.

31. The Court erred in failing to hold that plaintiff's vendees of the so-called "Zerk" type grease cups or "nipples," manufactured and sold by plaintiff, have an implied license to use such grease cups or "nipples," for the normal [fol. 613] purpose and in the normal manner intended and required by the structure of said grease cups or "nipples," and that in the exercise of this right and license the vendee is at liberty to employ any of the ordinary old and unpatented devices or things of the prior art with which said grease cups or "nipples" may be used for the attainment of their intended utility.

32. The Court erred in deciding, in effect, that the seller of a patented, or of an unpatented article, may, by virtue of his ownership of another patent covering that article in combination with the ordinary devices or old things with which it must necessarily be used, impose as a condition of such sale and the right to use that article in the only way it can be used, that such articles shall not be used in combination with said ordinary devices or old things sold by a competitor.

33. The Court erred in enjoining the defendant from manufacturing and selling any and all old and unpatented grease pumps or grease guns and conduit couplers or connectors adapted and intended for use in conjunction with grease cups manufactured and sold by plaintiff under its patent No. 1,307,733 (not in suit).

34. The Court erred in enjoining the defendant from manufacturing and selling any and all old and unpatented grease pumps or grease guns and conduit couplers or connectors adapted and intended for use in conjunction with unpatented grease cups manufactured and sold by plaintiff.

35. The Court erred in enjoining the defendant from selling any old and unpatented pump and hose for the purpose of dispensing rease, equipped with the bayonet type of coupler manufactured and sold by the plaintiff according to the Gullborg Patent No. 1,307,734 in suit, and which plaintiff's product defendant purchased on the open market, contrary to the recommendation implied in the Master's report, ordered aproved, to wit:

"I am further ready to agree with the concluding paragraph of the reply brief that it is no infringement to furnish a 'compressor' minus a 'coupler,' in other words, the pump and hose elements adapted to receive a Gullborg alemite coupler of plaintiff's manufacture. These two devices are public property; * * *"

36. The Court erred in decreeing that defendant be enjoined from issuing and/or selling defendant's pump and [fols. 614 & 615] hose in connection with or attached to a genuine Alemite coupler of plaintiff's manufacture.

37. The Court erred in holding and adjudging that the final decree of dismissal in the case of Bassick Manufacturing Company v. Frank Miller Company No. 2759 United States District Court, District of New Jersey, was not a decree on the merits or a final decree in said New Jersey cause, and that said final decree of dismissal was therefore not a good defense or bar in this Court as res judicata.

38. The Court erred in making perpetual the temporary injunction heretofore granted herein.

39. The Court erred in finding the equities to be with the plaintiff and in awarding it an injunction, accounting and costs as prayed for in the bill.

Wherefore and for divers other errors in the records, proceedings, and decrees and orders of this Court in this cause appearing, said defendant prays that the decrees of this Court entered May 25, 1928; June 23, 1928; and November 19, 1932, respectively, and each of them, be reversed.

Leonard L. Kalish, Solicitor and Counsel for Defendant-Appellant. Burch, Minor & McKay, of Counsel.

Bond on Appeal for $250.00, approved and filed Dec. 16, 1932, omitted in printing.

[fol. 616] In United States District Court

Order Allowing Former Physical Exhibits to Be Sent to Circuit Court of Appeals—Entered Dec. 16, 1932

In this cause it appearing to the court that appeals to the Circuit Court of Appeals for this Circuit were hereto-

fore taken from the decree of this court of May 25, 1928, as corrected by the decree of June 23, 1928, but that said appeals were dismissed because not having been taken from a final decree, the opinion dismissing said appeals being published in 50 Fed. Rep. (2d) 592; and an appeal having been prayed by the defendant from the final decree of this court of November 19, 1932, it is now ordered and adjudged that, in making up the record for this latter appeal, the clerk need not recopy the record up to and including the decree of June 23, 1928, but may use in lieu thereof a printed copy of the record on said first appeal, attaching there to a complete copy of all such proceedings as have occurred in this court since the said decree of June 23, 1928, and certify all the foregoing as the record on the present appeal. Along with the said certified record, the clerk of this court will send to the Circuit Court of Appeals such physical exhibits, if any, as were sent up on the first appeal and by the Circuit Court of Appeals returned to this court.

H. B. Anderson, Judge.

Dated this Dec. 16, 1932.

[fol. 617] In United States District Court

Order Extending Time for Preparation of Appeal, Etc. —Entered Dec. 16, 1932

In this cause, for good and sufficient reasons to the Court appearing, it is ordered by the Court that the time for the preparation and settling of the Record on Appeals, and for filing præcipes or supplemental præcipes, and for complying with the rules relating to appeals, be extended, and the same are hereby extended to and including January 19, 1933.

H. B. Anderson, United States District Judge.

Dated this Dec. 16, 1932.

Citation in usual form, showing service on Lowell W. Taylor, filed Dec. 17, 1932, omitted in printing.

[fol. 618] IN UNITED STATES DISTRICT COURT

ORDER APPROVING NARRATIVE FORM OF TESCIMONY—Entered Jan. 7, 1933. H. B. Anderson, Judge

It is hereby ordered that the narrative of the testimony heretofore approved by this court for the purposes of appeals Nos. 5397 and 5398, heretofore taken to the court of Appeals for the Sixth Circuit, shall be deemed as a correct narrative form of the testimony in this cause, for purposes of appeal allowed the defendant in this cause by order of this court dated December 16, 1932, allowing such appeal, and that such narrative form of testimony become a part of the record on this last mentioned appeal.

January 7, 1933.

[fol. 619] IN UNITED STATES DISTRICT COURT

ORDER EXTENDING TIME TO COMPLETE TRANSCRIPT ON APPEAL —Entered January 16, 1933. H. B. Anderson, Judge

In this case, it appearing to the court that additional time is necessary in which to complete the transcript of record and proceedings had herein, and for filing same in the United States Circuit Court of Appeals, for this, the Sixth Judicial Circuit;

It is, therefore, hereby ordered by this court that the time be and is extended thirty days from this date for completing and filing same in the United States Circuit Court of Appeals for the Sixth Circuit; and the same additional time is allowed the appellants within which to make the deposit of $45.00 required by Rule 16 of said Appellate Court.

IN UNITED STATES DISTRICT COURT

DEFENDANT'S PRÆCIPE FOR RECORD ON APPEAL—Filed Jan 7, 1933

To the Clerk of the Said Court:

Please prepare and certify a Record on Appeal, in the above entitled cause, to be filed in the United States Circuit

Court of Appeals for the Sixth Circuit, in the appeal allowed the defendant in the above cause on December 16, 1932, and include in such Record on Appeal the following papers, pleadings, depositions, documents and exhibits:

(A) All the papers, pleadings, depositions, documents, and exhibits which formed a part of the record on appeals Nos. 5397 and 5398, to the Court of Appeals for the Sixth Circuit, entitled Hollingshead vs. Bassick, and Bassick vs. Hollingshead, respectively. Printed copy of Record on Former Appeal, marked X, is now handed you.

(B) Mandate of the Court of Appeals for the Sixth Cir-
[fol. 620] cuit, in the case entitled Hollingshead vs. Bassick, Appeal No. 5397, filed in this Court on January 19, 1932.

(C) Mandate of the Sixth Circuit Court of Appeals, in the case of Bassick vs. Hollingshead, Appeal No. 5398, filed in this Court on January 19, 1932.

(D) Defendant's Motion for entry of order in conformity with the Mandate of the Court of Appeals for the Sixth Circuit (filed September 23, 1932), including:

(1) Order proposed by defendant on Mandate of the Court of Appeals;

(2) Amendment to Answer, proposed by defendant;

(3) Interrogatories proposed by defendant.

(E) Affidavit of Leonard L. Kalish, filed November 19, 1932, in support of defendant's motions, filed September 23, 1932.

(F) Order of the District Court entered Novemeber 19, 1932, disallowing and denying defendant's motions.

(G) Findings of Fact, as proposed by defendant on November 19, 1932.

(H) Report of the Court Reporter, of the proceedings before the District Court on November 19, 1932.

(I) Decree of the District Court entered November 19, 1932.

(J) Findings of Fact and Conclusions of Law filed by the District Court on November 19, 1932.

(K) Petition for Appeal, filed December 16, 1932.

(L) Order allowing appeal, filed December 16, 1932.

(M) Bond on appeal, filed December 16, 1932.

(N) Citation on appeal, filed December 17, 1932.

(O) Order Respecting Record on Appeal, dated December 16, 1932.

(P) Order extending time (to January 9, 1933) for settling record on appeal, dated December 16, 1932.

(Q) Order approving narrative form of testimony, dated January 7, 1933.

(R) Copies of patents cited in amendment to answer proposed by defendant, filed September 23, 1932.

(S) Præcipe for Record on Appeal.

The foregoing item (H) need not be printed and may be transmitted as a physical exhibit.

Leonard L. Kalish, Burch, Minor & McKay, Solicitors and Counsel for Defendant.

January 7, 1933.

Approved January 7, 1933.
H. B. Anderson,
U. S. District Judge.

[fol. 621] Clerk's Certificate to foregoing transcript omitted in printing.

[fol. 622] Minute entry of argument and submission, Oct. 3, 1933, omitted in printing.

In United States Circuit Court of Appeals, Sixth Circuit

Order Setting Case for Re-Argument—Filed Feb. 16, 1934

It is ordered that this cause be specially set for re-argument on the 6 day of March, 1934.

[fols. 623 & 624] Minute entry of re-argument and submission, March 6, 1934, omitted in printing.

In United States Circuit Court of Appeals

Decree—Filed Nov. 14, 1934

Appeal from the District Court of the United States for the Western District of Tennessee.

This cause came on to be heard on the transcript of the record from the District Court of the United States for the Western District of Tennessee, and was argued by counsel.

On consideration whereof, it is now here ordered, adjudged and decreed by this Court that the decree of the said District Court in this cause be and the same is hereby reversed and the cause remanded for further proceedings consistent with the opinion of this court.

[fol. 625] [File endorsement omitted]

IN UNITED STATES CIRCUIT COURT OF APPEALS, SIXTH CIRCUIT

No. 6419

(Decided November 14, 1934)

THE R. M. HOLLINGSHEAD COMPANY, Defendant-Appellant,

v.

THE BASSICK MANUFACTURING COMPANY, Plaintiff-Appellee

Appeal from the District Court of the United States for the Western District of Tennessee

Before Moorman and Simons, Circuit Judges, and Raymond, District Judge

OPINION—Filed Nov. 14, 1934

RAYMOND, District Judge:

This appeal involves the validity and infringement of claims 1, 2, 3, 4, 5, 6, 8, 10, 14 and 15 of Gullborg patent 1,307,734, issued June 24, 1919, for "lubricating means"; and of claims 2, 3 and 5 of Zerk patent 1,475,980, issued December 4, 1923, for "lubricating apparatus."

An appeal to this court from an order confirming a special master's report upon collateral issues and making permanent a preliminary injunction, but without determination of fundamental issues of validity and infringement, was dismissed. See R. M. Hollingshead Co. v. Bassick Mfg. Co., 50 F. (2d) 592; and R. M. Hollingshead Co. v. Bassick Mfg. Co., 53 F. (2d) 470. The cause was then submitted to the district court upon the record made prior to

the first appeal. This resulted in a decree that the sale of compressors and couplers of the type exemplified in Exhibit A filed with the affidavit of Beezley, and a similarly designated exhibit filed with the affidavit of Cumming, constituted infringement of the several claims of the Gullborg patent above enumerated, and, as to Zerk, that the sale of [fol. 626] such compressors and Zerk adapters shown in Exhibit A filed with the affidavit of Cumming, was an infringement of the three claims of the patent here in controversy.

Many other occasions for consideration of these patents have arisen. In the case of Lyman Mfg. Co. v. Bassick Mfg. Co., 18 F. (2d) 29 (C. C. A. 6), the Gullborg patent was held valid as to claims 1, 2, 3, 4, 7, 8, 14 and 15, and invalid as to claim 12. In the case of Larkin Automotive Parts Co. v. Bassick Mfg. Co., 19 F. (2d) 944 (C. C. A. 7), claims 1, 2 and 6 of Gullborg and claims 2, 3 and 5 of Zerk were held valid and infringed. Discussion of one or both of these patents is also found in the following cases: Bassick Mfg. Co. v. C. P. Rogers & Co., Inc., 26 F. (2d) 724 (D. C.); Bassick Mfg. Co. v. Adams Grease Gun Corporation, 39 F. (2d) 904 (D. C.); Bassick Mfg. Co. v. United Grease Gun Corporation, 40 F. (2d) 549 (D. C.); Bassick Mfg. Co. v. Adams Grease Gun Corporation, 52 F. (2d) 36 (C. C. A. 2); Alemite Corporation v. Lubrair Corporation, 62 F. (2d) 899 (C. C. A. 1).

The structures enjoined comprise a grease reservoir, a pump, a hose, and a coupler or nozzle at the free end of the hose adaptable to pin-fittings affixed to the bearings of an automobile or other machinery, to establish a fluid proof connection between the grease dispensing pump and the grease cups or "fittings". Both were of substantially the same type and form, one being known as the "hand" and the other, the larger, as the "service" type, and each was adapted for use in combination with the pin-fitting of the alemite system.

With respect to the Zerk patent, the accused device is a conical contact nozzle adapted to be attached to appellant's compressor units for the purpose of establishing temporary connection with certain "Zerk" type grease cups. Appellant argues that the claims of this patent must be limited to those receptacle elements, the nozzle contact face of which

has a concavely spherical surface, while the nozzle manufactured by appellant has a contact surface which is conical and is adapted to be used with lubricant receptacles well known in the prior art.

Appellant does not make or sell pin fittings. In general, it is its claim that claims 1 to 10, inclusive, of the Gullborg patent are not infringed, because appellant's compressors are not capable of the "suctional" function which was the basis for the finding of validity of claims 1, 2, 3, 4, 7 and 8, in the Lyman case, and for denying validity of claim 12. [fol. 627] Appellant also asserts that claims 14 and 15 are not infringed, or, if held to be infringed, are necessarily invalid for lack of invention, because they should be interpreted to cover only Gullborg's suctional compressor in combination with the specific "pin-fitting" described in the two claims.

Considering first claims 1, 2, 3, 4, 5, 6, 8 and 10 of the Gullborg patent, it is apparent that no infringement exists. The Lyman case definitely recognized that Gullborg's improvement over prior patents was narrowly confined in that it pertained only to the form and resulting functions of Winkley's spring-pressed element for completing the seal. It was there said:

"In place of Winkley's cup, with top and sides complete, Gullborg substituted a cup-shaped perforated washer, which was spring-pressed into sealing contact with the head of the fitting."

The functions gained by this change of form were stated:

"The first was that after the initial sealing was effected by the spring pressure, it was intensified and made more efficient by the pressure developed in the liquid itself. The second was that by reason of the peculiar shape of the sliding member, and after it had been by the pressure of the fitting pushed up a substantial distance, upon the disunion of the parts the spring would throw it sharply down to its position of rest, leaving a vacuum behind it, and an upward inrush of air into this vacuum through the restricted opening would create a suction which would pull up into the opening the grease which at the moment of disunion had been below the opening, and which otherwise woud smear up the parts and impair the cleanliness of operation."

In distinguishing between the validity of the claims sustained and the invalidity of claim 12, it was said:

"So far, therefore, as any claim in Gullborg depends upon this suction result, it is valid; so far as it must rest solely for its novelty upon the pressure produced adhesion, it is invalid. Of the claims in suit, Nos. 1, 2, 3, 4, 7, and 8, by their reference to a perforated sliding disc or cup washer, or means for removing excess lubricant, sufficiently imply dependence upon the construction which will give this [fol. 628] novel suction effect. In claim 12 there is no novelty over Winkley, excepting that the interposed gasket is held against one of the members by the pressure of the lubricant. This claim, for the reasons just stated, is invalid."

Each of the claims here under consideration is limited to a coupler having a suction effect, consisting of a perforated sealing disc slidably mounted, or other equivalent means. The accused device of appellant is the old and well known grease gun or compressor with a coupling means which contains no sliding disc or cup washer or any mechanical means for producing suction effect designed to remove excess lubricant. Such retraction of excess lubricant as was made to appear upon demonstration was slight and was apparently only that commonly incident to the movement of grease upon release of pressure. The accused structures therefore lack the vital element previously found essential for the validity of the several claims relied upon. To give them the breadth of construction necessary to find infringement would be to give to specific improvements in matter of form and structure a scope wholly unwarranted by any precedent.

Claims 14 and 15 of the Gullborg patent were held valid in the Lyman case, but their scope was not there clearly defined. They have since been under consideration by several courts [see Bassick Mfg. Co. v. C. P. Rogers & Co., 26 F. (2d) 724 (D. C.); Bassick Mfg. Co. v. Adams Grease Gun Corporation, 39 F. (2d) 904 (D. C.); Bassick Mfg. Co. v. United Grease Gun Corporation, 40 F. (2d) 549 (D. C.); Bassick Mfg. Co. v. Adams Grease Gun Corporation, 52 F. (2d) 36 (C. C. A. 2); Alemite Corporation v. Lubrair Corporation, 62 F. (2d) 899 (C. C. A. 1)], and different constructions have been placed upon the views expressed in the Lyman case.

This appeal definitely presents the question whether or not, under claims 14 and 15, appellant and the public at large may use grease pumps of the prior art, adapted for connection with the Gullborg "pin-fitting" marketed by appellee under its other Gullborg patent 1,307,733, but devoid of Gullborg's "suction producing" coupling construction. Appellee's contention is that these claims should be given so broad a construction as to protect a monopoly of all compressors which are capable of connection with its alemite pin-fittings, regardless of whether those compressors include the suctional feature.

[fol. 629] It is not claimed that appellant has ever made or sold the alleged combination of compressor and grease cup. Nor is it claimed that it has made or sold the pin-fitting or grease cup described in claims 14 and 15 and protected by Gullborg patent 1,307,733. Appellant asserts only a right to make and sell prior art compressors not having the suction effect but adapted to be applied to any grease cups or fittings. It sells merely an unpatented non-suctional compressor. Appellee charges contributory infringement.

Claims 14 and 15 are not materially different. Claim 15 reads:

"15. The combination with a grease cup comprising a tubular member having a closure seat, a closure, a pin extending through said tubular member and from both sides thereof, and a spring confined between said pin and closure, and tending to hold said closure on its seat, of a grease pump having a discharge conduit, and means co-acting with the ends of said pin for detachably connecting the discharge end of said conduit with said grease cup."

The grease pump element of the combination, if construed literally, would clearly embrace any construction of grease gun or compressor whether with or without the "suctional effect." Appellee has sold several hundred millions of the pin-fittings, and the inescapable consequence of acceptance of its contentions would be to establish for it a practical monopoly of the business of making and selling compressors, both patented and unpatented, for supplying grease to automobiles.

Determination of patentability of a combination of old elements turns upon whether the combination produces,

through joint action of the elements, either a novel and useful result, or an old result in a more advantageous way. The problem is to ascertain what, if any, new cooperative function has been evolved. [See Hailes v. Van Wormer, 87 U. S. 353; Palmer v. Corning, 156 U. S. 342; Office Specialty Mfg. Co. v. Fenton, 174 U. S. 492; Grinnell Washing Machine Co. v. Johnson, 247 U. S. 426; Radio Corporation v. Dubilier Condenser Corporation, 59 F. (2d) 309 (C. C. A. 3).] Because of the necessity of ascertainment of this requisite joint or cooperative function if a patent is to be sustained, the duty rests upon the patentee to clearly and fully disclose the precise elements of the combination [fol. 630] upon which he seeks a monopoly. He is required to particularly point out and distinctly claim each of the elements which is a part of the combination.

The second major element of the claims under consideration includes.

"means co-acting with the ends of said pin for detachably connecting the discharge end of said conduit with said grease cup."

The all inclusive generality and baffling obscurity of this element preclude attempts to determine the presence of cooperative function, and it is only by reference to the drawings and specifications that the language can be accorded any specific meaning.

Claims must be interpreted in the light of specifications as though the words "substantially as described" were incorporated in each claim and should be limited to this contribution, which is the invention disclosed by the patent. Radio Corporation of America v. Twentieth Century R. Corp., 19 F. (2d) 290 (C. C. A. 2); International Banding Machine Co. v. American Bander Co., 9 F. (2d) 606 (C. C. A. 2); Tompkins-Hawley-Fuller Co. v. Holden, 273 F. 424 (C. C. A. 2); Fowler & Wolfe Mfg. Co. v. McCrum-Howell Co., 215 F. 905 (C. C. A. 2).

See also National Tube Co. v. Marks, 216 F. 507, 515 (C. C. A. —).

It is significant that neither the drawings nor the specifications afford any basis for liberal construction of the word "means." The only "means" illustrated or referred to are those which include as a novel feature a perforated sealing disc slidably mounted to reciprocate in the bore of

the coupling member. The six objects of the invention are stated to be:

1st. To provide novel means for supplying a lubricant under pressure to the parts of an apparatus to be lubricated, the said means comprising a grease pump or gun and means for detachably connecting the discharge of said grease pump or gun with the part to be lubricated.

2nd. To provide novel coupling means for connecting the grease gun with the parts to be lubricated, the said coupling means being so constructed that when the coupling members are uncoupled or disconnected from each other there will be no excess lubricant on the outer ends of the coupling members.

3rd. To provide novel means for effectively sealing the joint between the coupling members so that the lubricant may be forced between the parts to be lubricated under a very heavy pressure.

[fol. 631] 4th. To provide novel means whereby lubricant may be supplied to parts to which it is difficult to gain access.

5th. To provide novel coupling members to be permanently secured to the parts to be lubricated.

6th. To provide novel means to assist in attaching and and detaching a tubular coupling member to a part to be lubricated.

Nowhere in the specifications is there an indication of an intention to connect a novel pin-fitting with any and all known coupling means. Nor is there any suggestion that greater strength or efficiency would be obtained by such a combination.

It has often been stated that an element described in such general terms as to include every form of the element or device then known is insufficient except when the generic description can properly be interpreted to mean the particular form of the element set forth in the specifications. This necessarily follows from proper application of section 4888 of the Revised Statutes (35 U. S. C. A. sec. 33), which provides that the applicant for a patent shall file in the Patent Office a written description of the same, and of the manner and process of making, constructing, compounding

and using it, in full, clear, concise and exact terms, and that he shall particularly point out and distinctly claim the part, improvement or combination which he claims as his invention or discovery. [See Bettendorf Co. v. Ohio Steel Foundry Co., 56 F. (2d) 777 (C. C. A. 6).] In the case of Portland Gold Mining Co. v. Hermann, 160 F. 91, 99 (C. C. A. 8), it was said:

"In a combination device consisting in congeries of well known mechanical appliances, no liberality of construction is accorded to it to create a monopoly; but it is limited to the descriptive elements in the combination as expressed in the specifications; and no great liberality of the doctrine of mechanical equivalents can be indulged in its favor. As the applicant for such combination of old devices chooses his own expressions in presenting it, and is required to enumerate the elements of his claim, he is limited to the combined apparatus as specified. And no one is an infringer of a combination claim unless he uses the elements thereof, and in substantially the same mode of co-operation."

[fol. 632] And in the case of American Can Co. v. Hickmott Asparagus Canning Co., 142 F. 141, 146 (C. C. A. 9), we find the following:

"The question arises whether infringement is thereby avoided. The appellees contend that the words in the claim 'means for interlocking the hooks on the blank' are limited by the words which immediately follow, 'substantially as specified.' But those words refer to the whole claim, and import nothing into it not already there, either to narrow it, so as to escape anticipation, or to broaden it, so as to establish infringement. The words mean "substantially as specified in regard to the combination which is the subject of the claim.' Lake Shore R. R. Co. v. Car-Brake Shoe Co., 110 U. S. 229, 4 Sup. Ct. 33, 28 L. Ed. 129. Of course, an inventor cannot by the mere use of the word 'means,' in reference to the accomplishment of a designated function in a combination claim, appropriate any and all kinds of mechanism or devices which may perform the specified function, or any other mechanism or device than that which is described in the patent or which is its equivalent. Reference must be had to the specifications to ascertain the

means which are made an element of the claim and are protected by the patent. Dudley E. Jones v. Munger Imp. C. Machine Mfg. Co., 49 Fed. 61, (1 C. C. A. 158); Williams v. Steam Gauge & Lantern Co. (C. C.), 47 Fed. 322."

The exact question is the proper interpretation to be given to the word "means" and the language immediately following. A similar question arose in the case of Dudley E. Jones v. Munger Improved Cotton Machine Mfg. Co., 49 F. 61, 65 (C. C. A. 5), wherein one of the elements of the combination of the claim being considered was "means for delivering the cotton from the conveyer to the gin." The court said:

"It is true that the claims must be construed according to the language of each, but specifications and designs may be referred to to limit or explain, if not to enlarge. Can we consider that the patent of complainant may be held to cover any and every means that might possibly be used to convey the cotton from the exhaust chamber to the gin, or must it be limited to the actual means claimed, described, or suggested in the specifications? This is, as has [fol. 633] been herein decided, a patent for a combination, and each and every element of such combination must be used as patented, or the entire result is changed, and the machine sought to be held as infringing is a different one. In Vance v. Campbell, 1 Black 427, the court say-:

'Unless the combination is maintained, the whole of the invention fails. The combination is an entirety. If one of the elements is given up, the thing claimed disappears."

In determining what the combination is, for which letters patent have been granted, the entire designs, specifications, and claims may be considered. It is this special combination which has been held to be patentable on account of its producing a new and useful result; and, should it be held that this patent could cover every means that could be used for this function, there might be a new and other combination which would be valuable and useful, yet would be covered by these letters patent."

The rule is, therefore, that the scope of a patent upon a combination should be limited to the specific devices described or their mechanical equivalents. Applying these

principles to claims 14 and 15, it must be held that the interpretation of the words "means co-acting with the ends of said pin for detachably connecting the discharge end of said conduit with said grease cup" should be in the light of the drawings and specifications. Nowhere in the specifications is there found a description of any other co-acting means than the hollow coupling member described in line 109, page 1, to line 18, page 2, of the patent, which read:

"* * * a hollow coupling member, indicated in general by the reference character 21. The free end of this coupling member, as shown in Fig. 2, is provided with a bayonet slot 22, the transverse portion 23 of which is included from the inner end of the longitudinal portion of the slot toward the outer end of the coupling member for a purpose which will be referred to later on. The bore of the coupling member is enlarged at 24 to provide an annular shoulder 25. A perforated cup leather or sealing disk 26 is slidably mounted in the annular portion 24 of the bore of the coupling and is urged against the shoulder 25 by means of a coiled spring [fol. 634] 27, one end of which abuts against the cup leather or sealing disk 26 and the other end of which abuts against the adjacent end 28 of the conduit 19. This end of the conduit may be soldered or secured in any convenient manner to the coupling member."

The co-action between the grease cup and coupling member is described in lines 47 to 84, page 2 of the patent. No alternative means is shown in the drawings or described or referred to in the specifications.

The word "means" which introduces the second element of claims 14 and 15 admits of no more than two possible constructions. It must either signify only the "novel means" several times referred to in the description and disclosed by the drawings, or include all possible means, patented or unpatented, then in existence or discovered during the life of the patent, for making the connection between a grease pump and the pin-fitting covered by the patent, Gullborg 1,307,733. Externally, the pin-fitting is the same as those in common use with bayonet couplings prior to this patent. Its novelty is claimed to reside in increased strength and economy of manufacture effected by the extension of the projecting "arms" entirely through the fitting,

and the resulting provision for support of the spring which actuates the closure. It is the view of the court that these advantages may be claimed only where the pin-fitting described is used in combination with couplers having the novel suction effect.

In view of the limited scope of the invention, this interpretation of the word "means" as used in these claims is within the principles announced in Davis Sewing Mach. Co. v. New Departure Mfg. Co., 217 F. 775, 782 (C. C. A. 6).

Counsel for appellee in apparent recognition of the inadequacy of the drawings and specifications of Gullborg 1,307,734 to meet the exactions of sec. 4888, urge that reference should be made to Gullborg 1,307,733 and that claims 14 and 15 are to be interpreted in the light of the drawings and specifications of that patent which shows only the non-suction effect coupler. To support this contention, the case of In re Tully, 12 F. (2d) 624 (App. D. C.), is cited, where it was said:

"It is familiar law that this claim must be given an interpretation consistent with the application in which it originated."

The issue in that case, however, involved the allowance or rejection of claims pending in the patent office where different rules clearly apply. No case is found where, in an effort to interpret the word "means" as an element of a patent upon a combination, reference has been permitted [fol. 635] to another patent upon one of the elements for interpretation of that word.

It is the conclusion of the court that claims 14 and 15 are valid only if the word "means" is limited by construction in the light of the drawings and specifications to a coupling member embracing mechanical means designed to produce a suction effect for the purpose of removing excess lubricant. Appellant's structure therefore does not infringe these claims.

The discussion in the Lyman case of the validity of these claims was limited to the following paragraph:

"We see no reason for denying the patentable novelty of Gullborg's particular form of fitting, by reason of which it has come to be called a pin fitting, and by which the same pin which furnished bearings for the slot was made to pass through the fitting and furnish an abutment for the

valve closing spring; *but it is only this complete combination that can be patentable.*''

The italicized words obviously refer to a specific combination. There was no discussion of the validity of the claims considered in the scope here urged by appellee, and the case is not open to construction contrary to the view here expressed. It is our conclusion, therefore, that the case is not to be regarded as authority for appellee's contention.

With reference to claims 2, 3 and 5 of the Zerk patent, it is important to observe that each contains a limitation as to form which denies the right to generic construction. These claims were sustained in the case of Larkin Automotive Parts Co. v. Bassick Mfg. Co., 19 F. (2d) 944 (C. C. A. 7), upon the asserted novelty of the concavely spherical surface of the nozzle and the dirt-cutting circumferential edged part adapted to be embraced within the spherical surface of the nozzle. The principle applicable to claims specific as to matters of form, structure and function is stated in the case of D'Arcey Spring Co. v. Marshall Ventilated Mattress Co., 259 F. 236, 240 (C. C. A. 6), as follows:

"* * * where the claim defines an element in terms of its form, material, location or function, thereby apparently creating an express limitation, where that limitation pertains to the inventive step rather than to its mere environment, and where it imports a substantial function which the patentee considered of importance to his invention, the [fol. 636] court cannot be permitted to say that other forms, which the inventor thus declared not equivalent to what he claimed as his invention, are nevertheless to be treated as equivalent, even though the court may conclude that his actual invention was of a scope which would have permitted the broader equivalency."

In each of the three claims relied upon, the patentee has expressly limited himself to a structure embodying a "nozzle contact surface having a concavely spherical surface." The appellant's coupler complained of has a conical surface, that is, the contact face is in shape a truncated cone. The main object of the Zerk invention was stated to reside in relieving the operator performing the several operations involved in greasing automobiles from assuming

awkward positions, the nozzle contact face being adapted to be pressed against that of the pin-fitting from any one of a number of different angular directions, at the same time maintaining a tight lubricant proof contact between the circular edge of one contact face and the spherical surface of the other contact face which engages it. The specific form adopted renders it unnecessary to hold the coupler and pin-fitting in precise alignment. Whether or not the description of appellant's device as a truncated cone is meticulously accurate is not important. It is obvious that upon the contact surface thereof there is no substantially spherical concave element within the meaning of that description in the patent. The claims relied upon are entitled only to a very narrow range of equivalents and cannot be found to be infringed by a nozzle the form of which is such that it does not make a sealed connection between the face openings unless it is held in an approximately vertical position. Appellant's structure makes complete contact only when the axis of the cone is substantially perpendicular to the plane of the circle. It is elementary that one thing to be the equivalent of another must perform the same functions. It follows that the two nozzles cannot be held to be mechanical equivalents. Among desirable results claimed by the patentee is the claim that:

"A leak proof connection is maintained between the rim or edge 16 of the nipple contact face and the spherical contact face of the nozzle by the manual pressure exerted toward the nipple upon the handle. This is true, even though the angle from which the nozzle is presented to the nipple is varied widely, the nipple circular edge making a [fols. 637 & 638] tight joint with the nozzle spherical face 15 in all cases, so long as they are pressed together, and when so pressed together complete a closed conduit or passage-way for lubricant under high pressure passing from the gun nozzle to the interior of the nipple."

Appellant's device, when held by the operator from different angular directions, is clearly not adapted to maintain lubricant proof contact between the adjacent surfaces.

It is the conclusion of the court that appellant's device differs materially in function, this difference arising from the fact that there is no substantially "spherically con-

cave'' element in appellant's structure. Infringement is therefore not present.

The decree of the district court is reversed and the cause remanded for the entry of a new decree in accordance herewith.

[fols. 639-641] [File endorsement omitted.]

[fol. 642] IN UNITED STATES CIRCUIT COURT OF APPEALS FOR THE SIXTH CIRCUIT

[Title omitted]

APPELLEE'S PETITION FOR REHEARING—Filed Dec. 14, 1934

To the Honorable the Judges of this Court:

The appellee herein, The Bassick Manufacturing Company, respectfully petitions this Court to grant a rehearing of this cause, and especially to reconsider certain essential statements and conclusions of the opinion filed herein on the 14th day of November, 1934.*

[fol. 643] As the basis for such rehearing and reconsideration, appellee respectfully submits that the Court, as shown by its opinion herein, erred in the particulars hereinbelow specified:

I

In its opinion the Court said:

"Appellant does not make or sell pin fittings. In general, it is its claim that claims 1 to 10, inclusive, of the Gullborg patent are not infringed, because Appellant's compressors are not capable of the 'suctional' function which was the basis for the finding of alidity of claims 1, 2, 3, 4, 7 and 8 in the Lyman case, and for denying validity of claim 12. * * *

---

* The Appellee by the specifications contained in this petition does not intend to waive, but rather still insists upon, each of its contentions heretofore made in the briefs on file, but it particularizes in this petition for a rehearing only those as to which it believes that the Court's conclusions were based upon clear errors in its understanding of the facts.

"Considering first claims 1, 2, 3, 4, 5, 6, 8 and 10 of the Gullborg patent, it is apparent that no infringement exists. * * *

"The accused device of appellant is the old and well known grease gun or compressor with a coupling means which contains no sliding disc or cup washer or any mechanical means for producing suction effect designed to remove excess lubricant. Such retraction of excess lubricant as was made to appear upon demonstration was slight and was apparently only that commonly incident to the movement of grease upon release of pressure. The accused structures therefore lack the vital element previously found essential for the validity of the several claims relied upon. To give them the breadth of construction necessary to find infringement would be to give to specific improvements in matter of form and structure a scope wholly unwarranted by any precedent."

Whereas, the fact is that the defendant sold two different kinds of structures or devices, namely, a compressor or gun exemplified in Exhibit A of the Beezley affidavit, and another compressor or gun exemplified in Exhibit A of the [fol. 644] Cumming affidavit. The first included a "suction effect" coupler. The second included a coupler which was not of the suction type. The exact construction of the suction effect coupler of the compressor which Hollingshead sold to Beezley is shown in the enlarged drawing constituting Exhibit J of the Davis affidavit and Plaintiff's Exhibit 15 at final hearing. This drawing is reproduced on page 373 of the Record herein. It is substantially identical with the suction effect couplers of the compressors uniformly held by other courts, and heretofore uniformly held by this Sixth Circuit Court of Appeals to constitute an infringement of claims 1, 2, 3, 4, 7 and 8 of the Gullborg patent in suit No. 1,307,734.

The fourth paragraph of the decree of the District Court, from which the above appeal was taken, found "that the defendant, The R. M. Hollingshead Company, has infringed claims 1, 2, 3, 4, 5, 6, 8, 10, 14 and 15 of said Gullborg patent No. 1,307,734, and violated the rights of the plaintiff thereunder by the sale of couplers of the type exemplified in Exhibit A submitted with the affidavit of D. A. Beezley of April 12, 1926, and illustrated in the drawing Exhibit J of the affidavit of Ernest W. Davis of October 21, 1926"; where-

upon it was decreed that a writ of injunction issue, restraining Hollingshead from making, using or selling "(a) Compressors of the type exemplified in Exhibit A of the affidavit of D. A. Beezley of April 12, 1926."

Your petitioner respectfully submits that it was error on the part of this Court to find and hold that the device sold by Hollingshead to Beezley was not of the suction type, and that it was not sold in infringement of claims 1, 2, 3, 4, 5, 6, 8 and 10 of the said Gullborg patent 1,307,734.

[fol. 645] II

In its opinion the Court said relative to Zerk patent in suit No. 1,475,980, that:

"Appellant's device, when held by the operator from different angular directions, is clearly not adapted to maintain lubricant-proof contact between the adjacent surfaces.

"It is the conclusion of the Court that Appellant's device differs materially in function, this difference arising from the fact that there is no substantially 'spherically concave' element in Appellant's structure. Infringement is therefore not present."

Whereas, the fact is that the appellant's device, when applied by the operator from different angular directions, does maintain lubricant-proof contact between the adjacent surfaces, due to the fact that engaging surface of the nozzle of the appellant's compressor is substantially spherically concave.

Your petitioner respectfully submits that the Court, as shown by its opinion herein, erred in holding that:

"The appellant's coupler complained of has a conical surface, that is, the contact face is in shape a truncated cone."

and not a substantially spherically concave surface, and that it is not an infringement of claims 2, 3 and 5 of the Zerk patent in suit.

Wherefore, and for other reasons appearing in petitioner's brief in support of this petition, petitioner respectfully urges that a rehearing may be granted, and that the man-

date of this Court may be stayed pending the disposition of this petition.

Respectfully submitted, The Bassick Manufacturing Company, Plaintiff-Appellee, by Lynn A. Williams, Counsel for Petitioner.

[fols. 646-675] I hereby certify that the above petition is well grounded in law and proper to be filed, and is not interposed for purposes of delay.

Lynn A. Williams, Counsel for Plaintiff-Appellee, The Bassick Manufacturing Company.

Brief in support of petition for rehearing omitted in printing.

[fol. 676] IN UNITED STATES CIRCUIT COURT OF APPEALS

ORDER DENYING PETITION FOR REHEARING—Filed January 14, 1935

The petition for rehearing in this cause is hereby denied.

[fol. 677] Clerk's certificate to foregoing transcript omitted in printing.

SUPREME COURT OF THE UNITED STATES

ORDER ALLOWING CERTIORARI—Filed May 20, 1935

The petition for a writ or certiorari to the United States Circuit Court of Appeals for the Sixth Circuit is granted. And it is further ordered that the duly certified copy of the transcript of the proceedings below which accompanied the petition shall be treated as though filed in response to such writ.

The Chief Justice took no part in the consideration or decision of this application.

FILE COPY

FILED
APR 13 1935

SUPREME COURT OF THE UNITED STATES

OCTOBER TERM, 1934

No. [redacted] 23

THE BASSICK MANUFACTURING COMPANY,
Plaintiff-Petitioner,

vs.

THE R. M. HOLLINGSHEAD COMPANY,
Defendant-Respondent.

PETITION FOR WRIT OF CERTIORARI

AND

BRIEF IN SUPPORT THEREOF.

LYNN A. WILLIAMS,
ALBIN C. AHLBERG,
Counsel for Petitioner.

Eastman Bros., Inc., Law Printers, 542 S. Dearborn St., Chicago.

INDEX.

PETITION FOR WRIT OF CERTIORARI 1

Summary and short statement of the matter involved 2

Reasons relied on for the allowance of the writ 3

BRIEF OF PETITIONER IN SUPPORT OF PETITION FOR WRIT OF CERTIORARI 11

Opinion of the court below 11

Jurisdiction 12

Statement of question involved 12

Summary of argument 12

Petitioner's business 13

Statement 15

The construction and mode of operation of the coupler of the Gullborg patent No. 1,307,734 16

The Hollingshead Company's equipment 17

The compressor sold by the Hollingshead Company to Beezley included a suction effect coupler substantially identical with those held by the Seventh Circuit Court of Appeals, and previously held by the Sixth Circuit Court of Appeals, to infringe the suction effect claims of Gullborg patent No. 1,307,734 20

The construction and mode of operation of the couplers previously held by the Sixth Circuit Court of Appeals to infringe the "suction effect" claims of the Gullborg patent 1,307,734 24

In the structure of the Gullborg patent in suit, as in the case of all of the "suction effect" compressors heretofore held by the Sixth Circuit Court of Appeals and by the Seventh Circuit Court of Appeals and by scores of District Courts to infringe the suction effect claims of the Gullborg patent No. 1,307,734, it is necessary to relieve the pressure upon the grease in order to secure the advantages of the "suction effect" 28

In conclusion 30

Specification of errors 34

Appendix:

List of cases in which petitioner's Gullborg patent No. 1,307,734 was found valid and infringed 35

Cases Cited.

American Stove Co. *v.* Cleveland Foundry Co., *et al.*, 158 Fed. 978, 985 31
Ball & Roller Bearing Co. *v.* F. C. Sandford Mfg. Co., 260 Fed. 415 31
Bassick *v.* Adams, 52 Fed. (2d) 36 8
Bassick *v.* The Larkin Automotive Parts Co., 18 Fed. (2d) 29 25
Bassick *v.* O. K. Manufacturing Co., 18 Fed. (2d) 29 24
David *et al. v.* Harris, 206 Fed. 902, 904 31
Fay *v.* Mason *et al.*, 127 Fed. 325, 333 32
Fried, Krupp Aktien-Gesellschaft *v.* Midvale Steel Co., 191 Fed. 588 32
Hardinge Conical Mill Co. *v.* Abee Engineering Co., *et al.*, 195 Fed. 936, 940 31
Holland Furniture Co. *v.* Perkins Glue Co., 277 U. S. 245, 246 12
Hollingshead *v.* Bassick, 50 Fed. (2d) 592 3
I. T. S. Rubber Co. *v.* Essex Rubber Co., 270 Fed. 593, 605 31
Kohn *v.* Eimer *et al.*, 265 Fed. 900, 903 31
Larkin Automotive Parts Company and Montgomery Ward & Co. *v.* Bassick, 19 Fed. (2d) 944 21
Larkin *v.* Bassick, 19 Fed. (2d) 944 ..... 5, 8
Leeds & Catlin *v.* Victor, 213 U. S. 301, 325 ..... 5, 14
Lyman *v.* Bassick and six other cases, 18 Fed. (2d) 29 ..... 8, 27
Marconi Wireless Tel. Co. of America *v.* De Forest Radio Telephone & Telegraph Co., 243 Fed. 560, 563 31
National Mach. Corp. Inc. *v.* Benthall Mach. Co., Inc., 241 Fed. 72, 86 32
Rogers *v.* Alemite, 74 Fed. (2d) 1019 8
Safety Car Heating & Lighting Co. *v.* Gould Coupler Co., 239 Fed. 861, 865 31
Sundh Electric Co. *v.* General Electric Co., 204 Fed. 277, 279 31
Victor Talking Mach. Co. *v.* Sonora Phonograph Corp., 221 Fed. 676, 677 31
Webber Electric Co. *v.* Freeman Electric Co., 256 U. S. 668, 669 12

SUPREME COURT OF THE UNITED STATES

OCTOBER TERM, 1934.

No.

THE BASSICK MANUFACTURING COMPANY,
Plaintiff-Petitioner,

vs.

THE R. M. HOLLINGSHEAD COMPANY,
Defendant-Respondent.

PETITION FOR WRIT OF CERTIORARI.

To the Honorable the Chief Justice and Associate Justices of the Supreme Court of the United States:

Your petitioner, The Bassick Manufacturing Company, respectfully prays for a writ of certiorari to review the decision and decree of the United States Circuit Court of Appeals for the Sixth Circuit rendered November 14, 1934 (73 Fed. (2d) 543), directing that the bill of complaint be dismissed in the above entitled cause. A petition for rehearing was denied January 14, 1935.

Summary and Short Statement of the Matter Involved.

An ordinary patent infringement suit in equity was brought August 16, 1926, in the United States District Court for the Western District of Tennessee, Western Division, on patents to Arthur V. Gullborg No. 1,307,734, issued June 24, 1919, and to Oscar U. Zerk No. 1,475,980, issued December 4, 1923, charging an infringement thereof by the respondent, The R. M. Hollingshead Company, in the sale of certain lubricating devices, and praying an injunction and an accounting.

The Hollingshead Company, in so far as the Gullborg patent is concerned, sold two kinds of equipment known throughout a rather extensive litigation as "suction effect" and "non-suction effect." Petitioner, by this petition, seeks to bring before this court for review so much of the decree of the Circuit Court of Appeals for the Sixth Circuit as held the sale by the Hollingshead Company of "suction effect" couplers (and their associated compressors) not to be an infringement of the claims of the Gullborg patent.

The case was tried at final hearing in the District Court and a so-called "decree" was entered on May 25, 1928 (Rec., p. 533). The Hollingshead Company took an appeal from that decree[1] but the appeal was dismissed by the Sixth Circuit Court of Appeals as being

[1] Mr. Chief Justice Hughes appeared on the brief as one of the counsel for The R. M. Hollingshead Co. in connection with this first appeal to the Sixth Circuit Court of Appeals. His appointment to the United States Supreme Court occurred prior to the oral arguments upon this appeal. This first attempted appeal by the Hollingshead Co. was dismissed by the Sixth Circuit Court of Appeals. In its first appeal the Hollingshead Company did not argue or contend that its suction-effect couplers were not sold in contributory infringement of claims 1, 2, 3, 4, 5, 6, 8, 10, 14 and 15 of the Gullborg patent. It had not even assigned error on this score. In its first appeal, in which Mr. Justice Hughes appeared as counsel, the sole contention was that certain non-suction effect couplers did not infringe claims 14 and 15 of the Gullborg patent.

from an order confirming a special master's report upon collateral issues, and making permanent a preliminary injunction but without determination of the fundamental issues of validity and infringement and, therefore, non-appealable (*Hollingshead* v. *Bassick*, 50 Fed. (2d) 592; petition for rehearing denied 53 Fed. (2d) 470). The cause was then submitted to the District Court upon the record made prior to the first attempted appeal. This resulted in a decree holding that the sale of compressors and couplers of the type exemplified in Exhibit A filed with the affidavit of Beezley (suction effect) and Exhibit A filed with the affidavit of Cumming (non-suction effect) constituted infringement of claims 1, 2, 3, 4, 5, 6, 8, 10, 14 and 15 of Gullborg patent No. 1,307,734.

The opinion of the Sixth Circuit Court of Appeals reversing the decree of the District Court is reported at 73 Fed. (2d) 543. The order denying the petition for rehearing entered on January 14, 1935, is not reported.

Reasons Relied On For the Allowance of the Writ.

The discretionary power of this court to grant a writ of certiorari is invoked upon the following grounds as set forth in Rule 38 of this court:

The decision of the Sixth Circuit Court of Appeals sought to be reviewed is in direct conflict with the decisions of several other circuit courts of appeal relative to the Gullborg patent (and in conflict also with the previous decisions of the Sixth Circuit Court of Appeals in several other cases).

Claims 1, 2, 3, 4, 5, 6, 8 and 10 of the Gullborg patent No. 1,307,734 (Rec., p. 411) describe a lubricating sys-

tem for automobiles or other machines, in which a "pin fitting" (*i. e.*, a nipple or "grease cup") is permanently screwed into a hole leading to the bearing to be lubricated. Each bearing is permanently equipped with one pin fitting. A grease gun or compressor can, by means of Gullborg's coupler, be quickly attached to and detached from each of the several pin fittings in succession. The gun or compressor is first filled with grease. When, therefore, it is attached to one of the pin fittings by means of the coupler, its piston can be operated in such a way as to force grease under high pressure through the coupler and the pin fitting, into the bearing to be lubricated. Upon discontinuing the pressure in the grease gun by arresting the forward movement of the piston or by retracting the piston of the compressor, the associated coupler may be detached from the one pin fitting and subsequently attached to another pin fitting.

There was nothing new or patentable in or about the grease gun *per se* of Gullborg's combination. It was the construction and mode of operation of the coupler and the pin fittings which, in combination with the grease gun, constituted Gullborg's invention and led to the commercial adoption of Gullborg's lubricating system to an extent such as to have almost completely displaced every other known means for the lubrication of the chassis bearings of automobiles. The plaintiff, Bassick Manufacturing Company (and its successors, Alemite Corporation and Stewart-Warner Corporation) has sold more than five hundred million of the pin fittings and tens of millions of compressors and couplers for use in combination therewith.

The complete combination of the patent cannot be assembled by the manufacturer. It is only the ultimate

user who does that,—because it is only the ultimate user who has occasion to couple the compressor to a pin fitting. In this respect the Gullborg patent is like that of the Berliner patent involved in the case of *Leeds & Catlin* v. *Victor*, 213 U. S. 301, 325, where the claimed combination involved the disc record, tone arm, and stylus of a phonograph. It was only the ultimate user who brought together or "combined" the tone arm and stylus with the disc record.

Some of the many infringers of the Gullborg patent have sold the pin fitting parts only; others have sold the compressor and coupler parts only.

Almost all of the many suits for infringement of the Gullborg patent have therefore involved mainly questions of contributory infringement.

In the present case the Hollingshead Co. sold only the compressor and coupler part of the complete combination. It did so with the expectation and intention that the purchaser would combine it with the pin fitting parts manufactured and sold by others.

With this brief explanation of the invention of the Gullborg patent, the conflict of the decision of the Sixth Circuit Court of Appeals can be concisely and exactly stated:

In the case of *Larkin* v. *Bassick*, 19 Fed. (2d) 944, the Court of Appeals for the Seventh Circuit held that the Larkin Company's sale of certain couplers, together with their associated compressors, for intended use in combination with the plaintiff's "Alemite" pin fittings, was a contributory infringement of claims 1, 2 and 6 of the Gullborg patent in suit. In its decision rendered November 14, 1934 (73 Fed. (2d) 543), in the present case, the Sixth Circuit Court of Appeals held that the Hollingshead Company's sale of the same identical

couplers (together with their associated compressors) for intended use in combination with the plaintiff's "Alemite" pin fittings, was not a contributory infringement of these same claims 1, 2 and 6 of the Gullborg patent.

The *complete* identity of the couplers sold by the Hollingshead Co. in the one case with those sold by the Larkin Company in the other case, was due doubtless to the fact that the couplers sold by Hollingshead were manufactured for Hollingshead by Larkin prior to the time that Larkin had been enjoined against the further sale of these couplers. This common source of these identically similar couplers as sold by the two companies, is alluded to in the opinion by Judge Denison of the Sixth Circuit Court of Appeals, 50 Fed. (2d) 592 (rehearing denied 53 Fed. (2d) 470), wherein the first attempted appeal of the Hollingshead Company was dismissed. In this opinion Judge Denison said:

> "In *Lyman Mfg. Co.* v. *Bassick Mfg. Co.*, 18 F. (2d) 29, we held the Gullborg patent No. 1,307,734 valid as to certain claims and contributorily infringed by Larkin through the sale of his compressor or grease gun for the purpose of being used in connection with plaintiff's pin fittings to make up the combination described in these claims. . . . The Hollingshead Company, through a subsidiary at Memphis, had been purchasing and selling these Larkin devices, thus held to infringe these two patents. On account of such sales, the Bassick Company brought, in the court below, this suit complaining of the infringement of these two patents. Upon due application a preliminary injunction issued, which was expressly directed against the further sale of these Larkin devices."

The record in the present (Hollingshead) case does not show that the Hollingshead Co. purchased its coup-

lers (and the associated compressors) from the Larkin Co. It does, however, show the exact and complete identity of the couplers sold by Hollingshead with those sold by Larkin. The Larkin Company's sales of these couplers were held by the Seventh Circuit Court of Appeals to be a contributory infringement. The Hollingshead Company's sales of identically the same couplers were held by the Sixth Circuit Court of Appeals not to be a contributory infringement.[2]

This latest decision of the Sixth Circuit Court of Appeals in this case of *Hollingshead* v. *Bassick* is not only in conflict with the decision of the Seventh Circuit Court of Appeals in *Larkin* v. *Bassick*, 19 Fed. (2d) 944, but also in conflict with the decisions of several other United States Circuit Courts of Appeal, but is indeed in conflict with the prior decision of the Sixth Circuit Court of Appeals in *Lyman* v. *Bassick* and six other cases reported in 18 Fed. (2d) 29.

The conflict with the decision of the Seventh Circuit Court of Appeals can be most concisely stated, because

---

[2]Some of the guns or compressors in association with which the Hollingshead Co. sold its couplers, differed in immaterial respects from the compressors sold by Larkin prior to the commencement of the litigation against Larkin. Larkin was, however, compelled to discontinue the manufacture and sale of all of these slighly variant forms of compressors under the prior decision of the Sixth Circuit Court of Appeals, 18 Fed. (2d) 29, and under the decision of the Seventh Circuit Court of Appeals in 19 Fed. (2d) 944.

The details of the compressor are, however, of no consequence since the claims of the Gullborg patent describe the compressor part of the combination in such broad, general terms as "a pump" (claims 1, 2, 3, 4, 5 and 6), or "means for supplying lubricant to said conduit comprising a receptacle provided with a discharge outlet" (claims 8 and 10).

The opinion of the Sixth Circuit Court of Appeals in Lyman vs. Bassick and Six Other Cases, 18 Fed. (2d) 29, devotes itself in detail to the Gullborg coupler, and in a footnote on page 35 disposes of the compressor part of the combination by saying merely:

> "Of course, in order to allow this vacuum and suction to develop, any heavy pressure on the grease must be stopped, either by the check valves used in some forms, or by the release of the plunger pressure, or both, and, if there is any failure in this relief, the grease, perhaps after momentary retraction, will continue to exude."

The Hollingshead Co.'s couplers were sold with compressors having these check valves or means for releasing the plunger pressure, or both.

the defendant's allegedly infringing coupler in the Larkin case (19 Fed. (2d) 944, C. C. A. 7) was identical with the defendant's allegedly infringing coupler in this Hollingshead case. In the other cases the defendants' couplers differed in some details from the Hollingshead Co's. couplers. In construction and in mode of operation these other couplers embodied all of the essential features of the coupler of the Gullborg patent. It is impossible to reconcile the holding that the Hollingshead Co's. coupler did not infringe, with the holdings in the other case that the defendants' couplers did infringe. Indeed, it is impossible to reconcile the present holding of the Sixth Circuit Court of Appeals, that the Hollingshead Co's. coupler did not infringe, with the same Court's holding in *Lyman* v. *Bassick* and six other cases (including Larkin) that the defendants' couplers did infringe. The present decision of the Sixth Circuit Court of Appeals is, therefore, in direct conflict with the following decisions:

Larkin v. *Bassick* (C. C. A. 7), 19 Fed. (2d) 944.

Bassick v. *Adams* (C. C. A. 2), 52 Fed. (2d) 36.

Lyman v. *Bassick* and six other cases (C. C. A. 6), 18 Fed. (2d) 29.

Rogers v. *Alemite* (C. C. A. 3), 74 Fed. (2d) 1019.[3]

WHEREFORE, your petitioner respectfully prays that a writ of certiorari be issued to review the decision and decree of the United States Circuit Court of Appeals for the Sixth Circuit in the case numbered and entitled

[3] This present decision of the 6th C. C. A. is in conflict also with the decisions of many district courts under the same Gullborg patent. The invention of the Gullborg patent so completely replaced every other known means of lubricating the chassis bearings of automobiles and other machines that there has been a very great temptation to infringe it. The plaintiff's contentions relative to the infringement of the Gullborg patent have been fully sustained in all of the suits listed in the appendix.

on its docket, 6419, *The R. M. Hollingshead Company* v. *The Bassick Manufacturing Company,* to the end that this cause may be reviewed and reversed by this Court, and that your petitioner be granted such other and further relief as may be proper.

Dated, April 12, 1935.

THE BASSICK MANUFACTURING COMPANY,
By LYNN A. WILLIAMS,
ALBIN C. AHLBERG,
Counsel for Petitioner.

SUPREME COURT OF THE UNITED STATES

OCTOBER TERM, 1934.

No.

THE BASSICK MANUFACTURING COMPANY,
Plaintiff-Petitioner,

vs.

THE R. M. HOLLINGSHEAD COMPANY,
Defendant-Respondent.

BRIEF OF PETITIONER IN SUPPORT OF PETITION FOR WRIT OF CERTIORARI.

I.

Opinion of the Court Below.

The opinion of the Sixth Circuit Court of Appeals is reported in 73 Fed. (2d) 543, and is printed in the record at pages 601 to 614. There was no opinion on the petition for rehearing. The order denying the petition, entered January 14, 1935, appears at page 617 of the record.

Jurisdiction.

The grounds on which the jurisdiction of this court is invoked are:

1. The date of the judgment to be reviewed was November 14, 1934, and of the denial of the petition for rehearing January 14, 1935.

2. The judgment was rendered in a suit in equity brought under the patent laws to determine issues of validity and infringement of letters patent for invention issued by virtue of Title 35, Sec. 40, United States Code.

3. The statute under which jurisdiction is invoked is Sec. 240 (a) of the Judicial Code, Title 28, United States Code, Sec. 347 as amended by the Act of February 13, 1925.

4. Cases believed to sustain the jurisdiction are *Webber Electric Co.* v. *Freeman Electric Co.*, 256 U. S. 668, 669; *Holland Furniture Co.* v. *Perkins Glue Co.*, 277 U. S. 245, 246.

Statement of Question Involved.

The question involved before this Court is that of infringement of claims 1, 2, 3, 4, 5, 6, 8 and 10 of Gullborg patent No. 1,307,734.

Summary of Argument.

Claims 1, 2, 3, 4, 5, 6, 8 and 10 of Gullborg patent No. 1,307,734 describe a lubricating system or equipment which under the trade-name of "Alemite" has had a phenomenal commercial success. It promptly displaced every other known means for the lubrication of

the chassis bearings of automobiles and other similar machinery. Some or all of these claims of this patent have been adjudicated as valid and infringed in scores of similar cases. The couplers sold by Hollingshead correspond in every feature of construction and mode of operation with the coupler illustrated and described in the Gullborg patent. The claims in suit read squarely on the devices sold by the Hollingshead Company. The Hollingshead Company should be held as a contributory infringer of these claims, precisely as scores of other defendants have been so held.

Petitioner's Business.

In 1919, petitioner began the manufacture and sale of "Alemite" lubricating equipment under the protection of the Gullborg patent in suit No. 1,307,734. That business has continued down to the present time. This lubricating equipment comprises "pin fittings" which are screwed or attached to the bearings of automobile and other machinery, and compressors and couplers for use in conjunction with the fittings for introducing the lubricant into the bearings. Specimens of the equipment are in evidence as Plaintiff's Exhibit B, Otis testimony—assortment of Alemite pin fittings, and Exhibit A, Otis testimony—small hand type compressor, hose and coupler. Petitioner manufactured and sold a full line of pin fittings for various types of bearings and a large line of compressor outfits as illustrated in Plaintiff's Catalog, Exhibit E, Otis Testimony.

Each Alemite pin fitting is exactly like every other Alemite pin fitting in so far as the receiving or connecting end is concerned. The fittings differ only in the end which is attached to the bearing, that is, they

have different sizes and kinds of threads or securing means. Each compressor outfit, whether small or large, terminates in an Alemite coupler and is adapted to receive an Alemite pin fitting and to make a quickly attachable and detachable leak-proof and otherwise satisfactory connection therewith.

No two pieces of machinery have exactly the same number of bearings, located in exactly the same way. What the purchaser desires, therefore, is to buy a combination comprising a compressor of appropriate size or type, and an assortment of fittings adapted to fit the requirements of his particular machine, and a coupler by means of which the compressor may be successively connected with each of the several pin fittings.

In consonance with these requirements of purchasers, the Bassick Company, after first attempting to market the Alemite equipment in predetermined "sets," adopted the policy of separately listing and pricing all of the component parts of the complete combination, thereby allowing each purchaser to procure the assortment best adapted to his needs.

This method of selling is rather unusual. The only close parallel is that of the phonograph. The Victor Talking Machine Company sold the Victor phonograph under the Berliner patent No. 534,543, involved in *Leeds & Catlin* v. *Victor*, 213 U. S. 301, and 213 U. S. 325. The Berliner patent covered the combination of the turn-table, stylus, tone arm, etc., and the disc record. Anyone could buy a phonograph machine in any one of a dozen sizes and styles and then select the disc records which struck his fancy. One purchaser would buy a small portable Victrola Style 23-A and fifteen Jazz band records. Someone else would buy the console style Victrola No. 141-C, together with twenty-five

Grand Opera records. The phonograph machines and the records were separately listed and priced, just as are the component parts of the Alemite equipment. In both cases the purchaser desires and enjoys the advantage of making up a selection to suit his particular needs.

No high pressure lubricating equipment comparable to the patented equipment had ever been manufactured or sold prior to the advent of petitioner's product on the market.

Statement.

We have reproduced drawings of the Gullborg patent construction and drawings appearing in records constituting physical exhibits in this case, showing what were previously found to have been infringments of the Gullborg patent by the Sixth Circuit Court of Appeals and by the Seventh Circuit Court of Appeals.

The Construction and Mode of Operation of the Coupler of the Gullborg Patent No. 1,307,734.

In the accompanying Figure 1 we have illustrated the compressor and coupler exactly as they are disclosed in the Gullborg patent (Rec., p. 421). At the left-hand side of this drawing the coupler is shown in attachment with one of the fittings of the patent. "A perforated cup leather or sealing disc 26 is slidably mounted in the annular portion 24 of the bore of the coupling, and is urged against the shoulder 25 by means of a coiled spring 27, one end of which abuts against the cup leather or sealing disc 26, and the other end of which abuts against the adjacent end 28 of the conduit 19." (Rec., p. 423, line 7.) When the coupler is attached to the fitting, the end of the fitting pushes the cup leather sealing disc 26 away from the shoulder 25, and into the annular portion 24 of the bore of the coupler. The red coloring shows the entire space within the conduit and above the sealing disc 26 to be filled with grease under pressure.

(The hole through the pin fitting and into the associated shackle bolt is, of course, also filled with grease during the process of lubricating a bearing, but for the sake of clearness in illustrating the suction effect we have not applied the red coloring to these passageways in the fitting and shackle bolt and bearing.)

When the injection of grease under high pressure into a given bearing has been completed, the plunger of the compressor is backed off to relieve the pressure upon the grease, whereupon the coupler is detached from the pin fitting.

When the coupler is detached from the pin fitting by disengaging the bayonet slots of the coupler, as shown

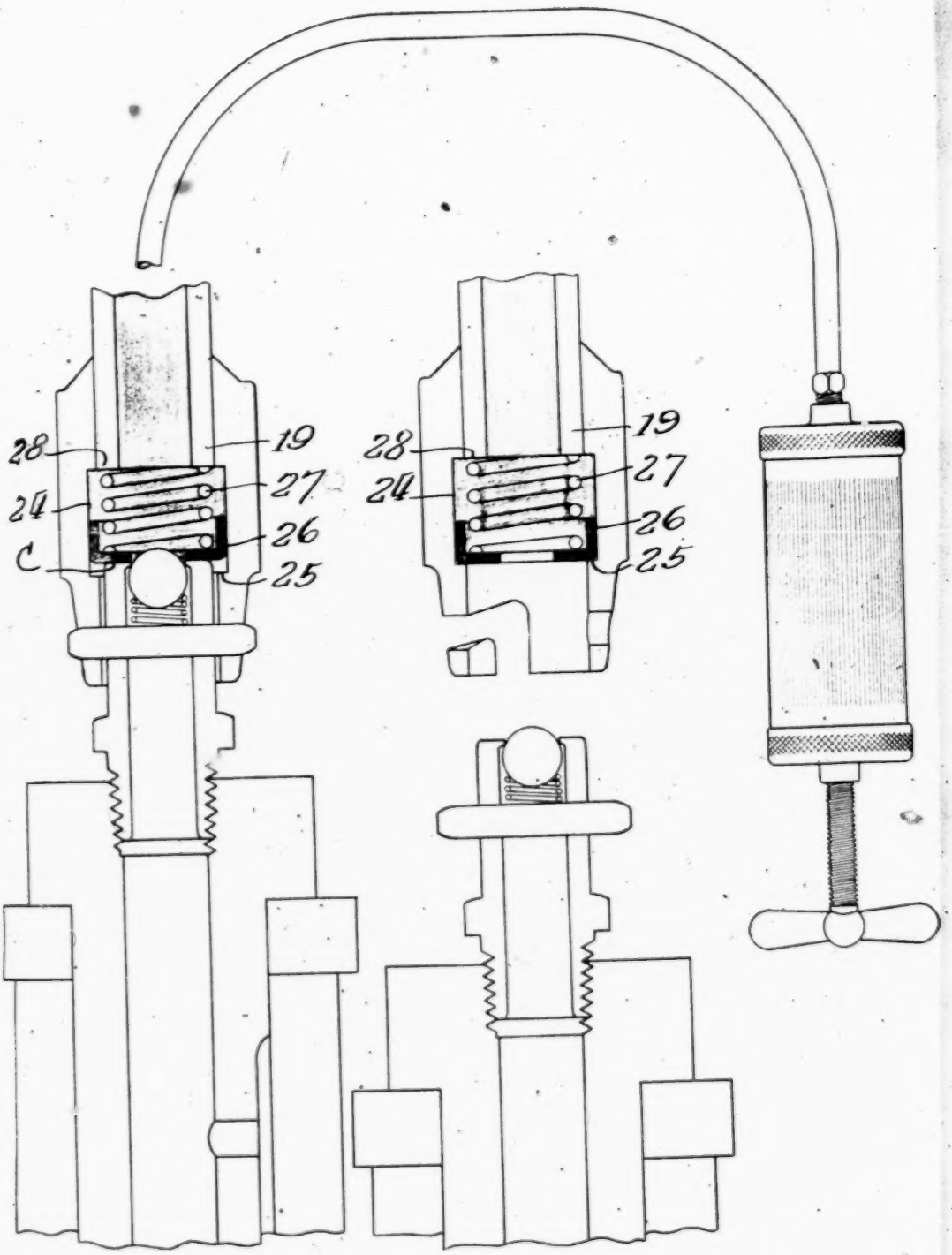

FIG. 1.

in the central view in Fig. 1, the perforated cup leather or sealing disc 26 is pushed downwardly by the spring 27, until the periphery of the sealing disc 26 engages the shoulder 25 at the end of the cylindrical bore 24 of the coupler.

When the sealing disc 26 is thus pushed downwardly by the spring 27, the space between the sealing disc 26 and the conduit 19 is enlarged slightly. The grease, like other liquids, is substantially non-compressible and non-expansible. The grease cannot and does not, therefore, expand (as would an elastic medium, like air) to fill this enlarged space.

The result is a tendency to produce a vacuum (*i. e.*, an unfilled space) within the bore of the coupler above the sealing disc 26, as indicated by the absence of the (red colored) grease just above the sealing disc 26 in the central view of Fig. 1. This vacuum creates a suction, *i. e.*, a tendency of the air to rush in to fill the empty space. This air rushing in through the crevice at C between the end of the fitting and the outer face of the sealing disc 26 carries with it the blob of grease which would otherwise be left on the end of the fitting and on the ball valve at the end of the fitting, and carries this excessive grease back through the hole or perforation in the sealing disc 26 and into the space in the bore of the coupler above the sealing disc 26.

The Hollingshead Company's Equipment.

The respondent Hollingshead Company sold two kinds of couplers (with their associated compressors). The coupler sold to Cumming was not of the "suction" type. This coupler bought by Cumming was found by the District Court to have been sold in contributory in-

fringement of claims 14 and 15 only of Gullborg patent 1,307,734. The Sixth Circuit Court of Appeals held that claims 14 and 15 must be limited to the "suction effect" type of coupler, and that the compressor and coupler sold to Cumming did not, therefore, infringe these claims.

The other type of coupler,—sold by Hollingshead to Beezley, had a "suction effect" coupler. The further sale of this suction effect coupler was enjoined by the District Court, not only under claims 14 and 15, but also under claims 1, 2, 3, 4, 5, 6, 8 and 10 of this Gullborg patent 1,307,734.

On behalf of the petitioner we have always asserted claims 1, 2, 3, 4, 5, 6, 8 and 10 to be limited to couplers of the "suction effect" type. We adhere to that view. The Hollingshead Company has always entertained and expressed the same view. The opinion of the Sixth Circuit Court of Appeals entered November 14, 1934, is based upon and expresses the same view. Everybody concerned has, therefore, entertained the same understanding of these claims, and still entertains the same understanding. Our petition for a writ of certiorari has to do solely, therefore, with the question of infringement of claims 1, 2, 3, 4, 5, 6, 8 and 10, (although claims 14 and 15 are, in any event, broad enough to cover the "suction effect" coupler).

The point of our petition is, briefly, that the compressor which Hollingshead sold to Beezley was of the "suction effect" type.

The coupler of this compressor which Hollingshead sold to Beezley is, in construction, mode of operation and result, substantially identical with the "suction effect" coupler illustrated and described in the Gullborg patent in suit. It is identical in construction,

mode of operation and result with the couplers of the compressors held by the Seventh Circuit Court of Appeals to infringe the "suction effect" claims of the Gullborg patent. We have already explained just what the "suction effect" is and how it is developed in and by the coupler of the Gullborg patent in suit. We wish now to call your Honors attention to the construction and mode of operation of the coupler of the compressor sold by Hollingshead to Beezley, and then to compare this coupler with that held by the Seventh Circuit Court of Appeals to be sold in infringement of the Gullborg patent.

We shall wish to compare it also with the couplers previously held by the Sixth Circuit Court of Appeals to infringe.

PLAINTIFF'S EXHIBIT 15

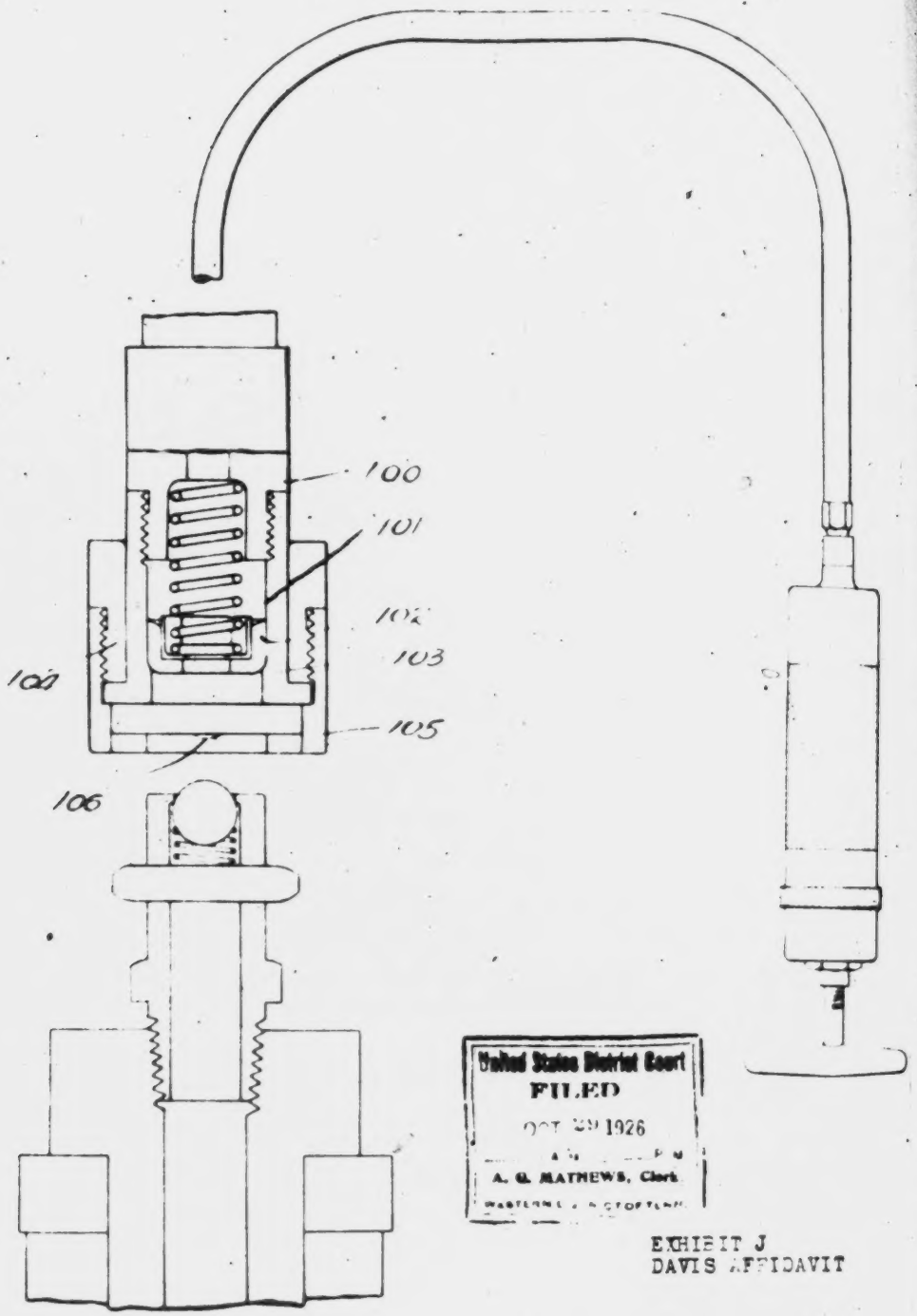

United States District Court
FILED
OCT 29 1926
A. G. MATHEWS, Clerk

EXHIBIT J
DAVIS AFFIDAVIT

The Compressor Sold By the Hollingshead Company to Beezley Included a Suction Effect Coupler Substantially Identical With Those Held By the Seventh Circuit Court of Appeals, and Previously Held By the Sixth Circuit Court of Appeals, to Infringe the Suction Effect Claims of Gullborg Patent No. 1,307,734.

Opposite this page we have reproduced Exhibit J drawing of the Davis affidavit, appearing at page 373 of record herein.* It illustrates the construction of the coupler forming a part of the compressor which the Hollingshead Company, respondent, sold to Beezley.

On the fly-page opposite this drawing of the Hollingshead equipment sold to Beezley, we have reproduced the same drawing, as Figure 2, but have shown the coupler both attached to a pin fitting and detached therefrom, as in the other drawings of this series. We have supplied reference numerals corresponding with those of the Gullborg patent drawing. Furthermore, we have shown in the left-hand view the condition of the grease during the period of injection. In the central view we have illustrated in red the fact that the grease does not entirely fill the bore 24 of the coupler above the sealing disc 26.

A comparison shows that the Hollingshead Company's suction effect coupler in this case is absolutely

* In all of these drawings the compressor part of the combination is shown in a conventional or diagrammatic manner. This is for the reason that the details of the compressor (or "the pump," as the claims describe it) form no part of Gullborg's invention. The "pump" or compressor was merely one element of the new combination. Any form or kind of grease "pump" would suffice for Gullborg's purpose. In all of the exhibit drawings and in all of our reproductions of them the important thing, i. e., the coupler and the cooperating pin fitting have been drawn to a large scale. Since the details of the compressor or "pump" are unimportant, this part of the drawings is shown on a small scale and in a digrammatic manner. None of the compressors of any of the parties in any of the suits to which reference is made conformed in all of their details to these diagrammatic representations of the compressor part of the combination.

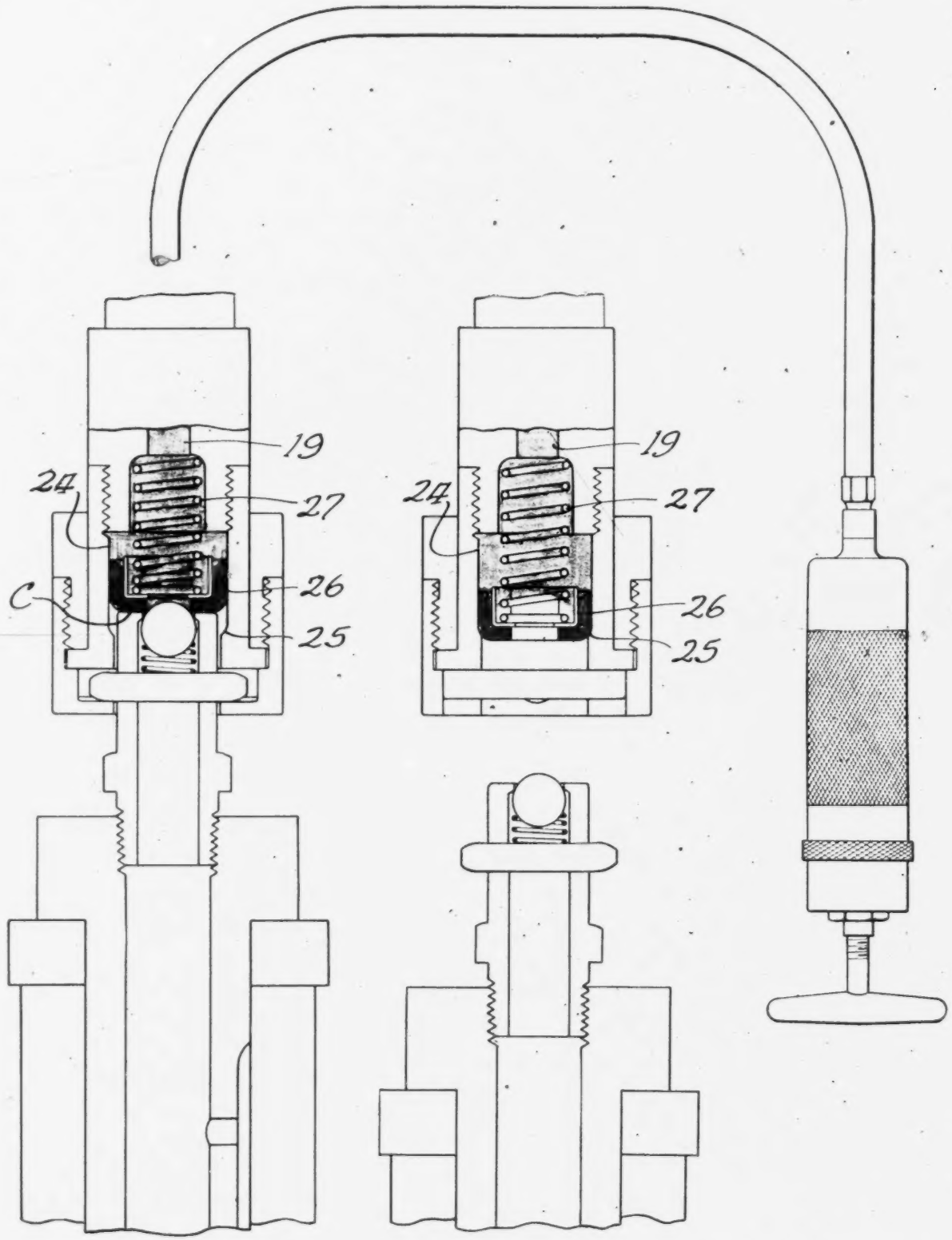

FIG. 2.

identical with the coupler manufactured and sold by the Larkin Automotive Parts Company as involved in the suit in the Seventh Circuit and as shown opposite the following page of this brief.

This brings us to the discussion of the Seventh Circuit Court of Appeals in *Larkin Automotive Parts Company and Montgomery Ward & Co. v. Bassick* (7th C. C. A.), 19 Fed. (2d) 944.

NORTHERN DISTRICT OF ILLINOIS
EASTERN DIVISION

THE BASSICK MANUFACTURING COMPANY
vs.
MONTGOMERY WARD & CO. INC. and
THE LARKIN AUTOMOTIVE PARTS CO.

EQUITY NO. 5180

Plaintiff's Exhibit No. 140

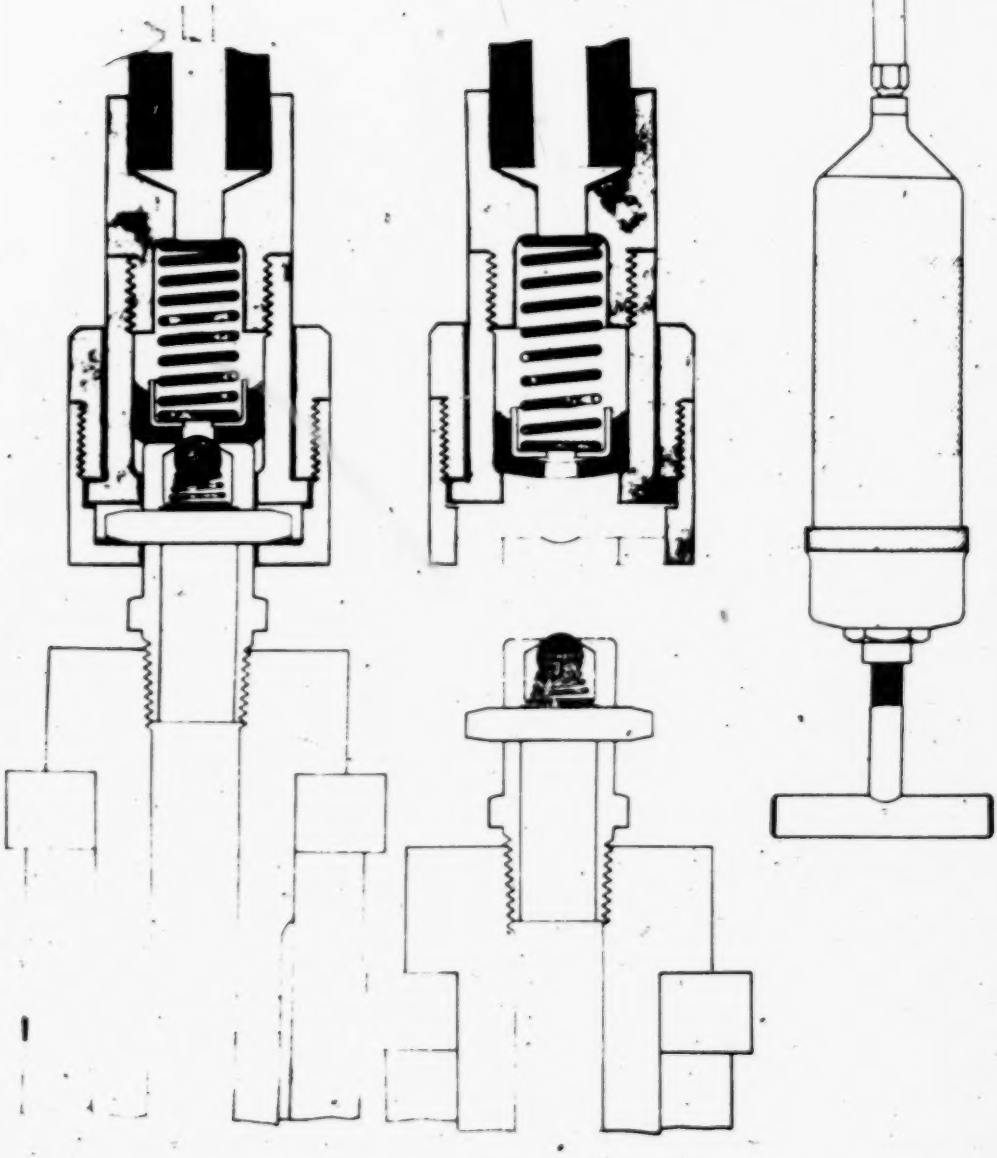

Opposite this page of this brief we have reproduced Plaintiff's Exhibit Chart No. 140, which appears at page 475 of the record in the case of *Larkin Automotive Parts Company et al.* v. *Bassick*, in the Seventh Circuit Court of Appeals. The two volumes of this record were offered in evidence herein as Plaintiff's Exhibits Nos. 6 and 6-A, and are here as physical exhibits. This drawing illustrates the suction effect coupler manufactured and sold by the Larkin Automotive Parts Company. It was found to infringe by the Seventh Circuit Court of Appeals, 19 Fed. (2d) 944.

Adjacent the drawing of this Larkin equipment we have, as Figure 3, reproduced the drawing with the addition of reference characters corresponding with those of the Gullborg patent.

As in the other instances, the left-hand view shows the coupler attached to the fitting. The conduit and the bore of the coupler are shown to be filled with grease. The sealing disc 26 is in the form of a cup leather; a spring 27 presses the cup leather 26 toward the shoulder 25.

When the coupler is detached from the pin fitting, as shown in the central view of Fig. 9, the spring 27 pushes the sealing disc 26 downwardly until it engages the shoulder 25, thereby enlarging the space within the bore 24 of the coupler. Here, as in the other instances, there is a tendency to produce a vacuum within the space above the sealing disc 26 and within the bore 24, because, as indicated in red in this central view, the grease cannot and does not fill the enlarged space which is created by the downward movement of the sealing disc upon the disconnection of the coupler from the pin fitting.

At the moment of disunion, "nature abhoring a vac-

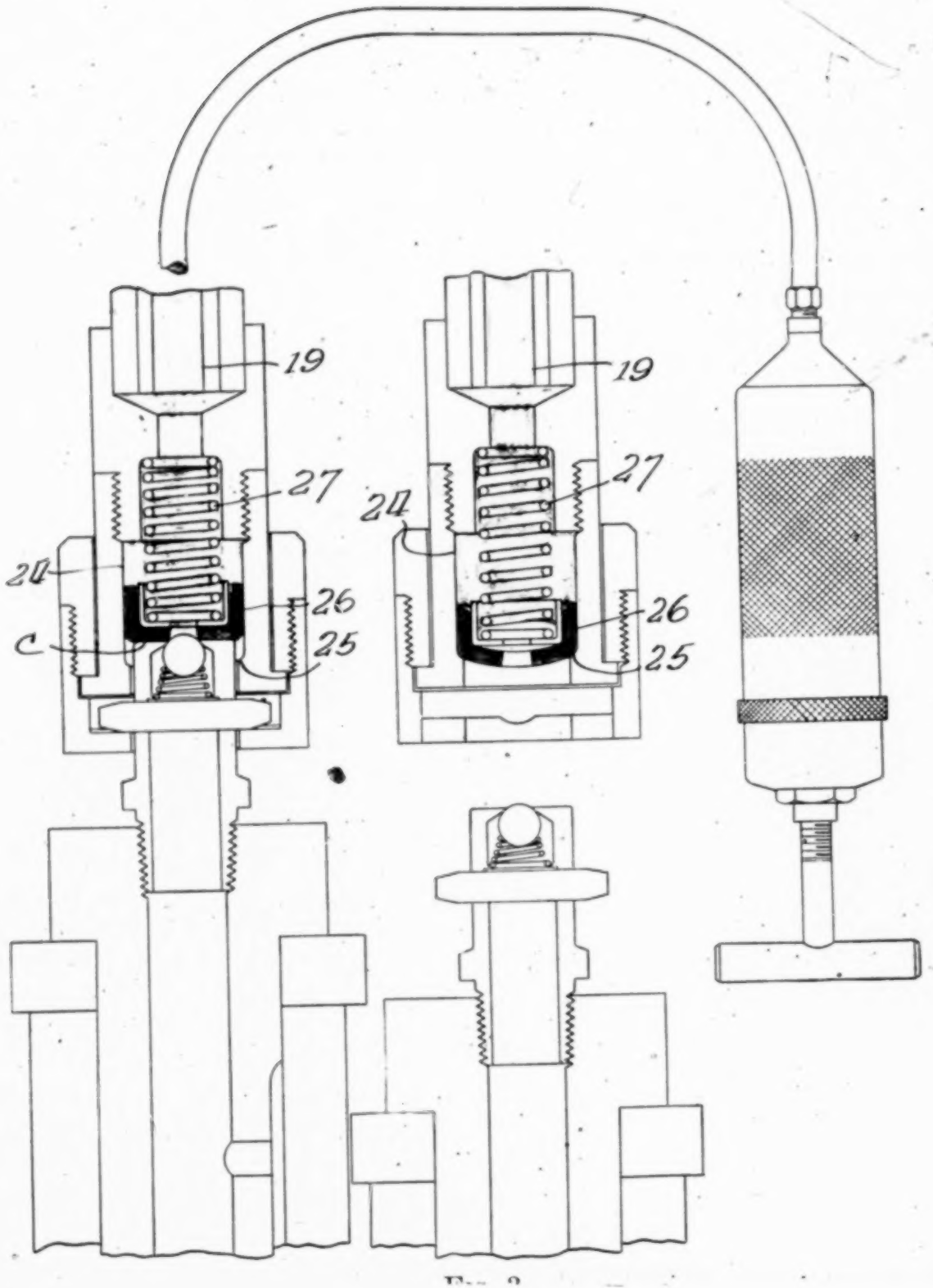

uum" causes air under atmospheric pressure to rush in through the crevice at C, thereby carrying any excess lubricant from the head of the fitting into the space above the sealing disc 26 and within the bore 24 of the coupler.

A comparison of the drawing Figure 2 with the drawing Figure 3, shows that the device now held by the Sixth Circuit Court of Appeals *not to infringe* is *identical* with the device held by the Seventh Circuit Court of Appeals to infringe.

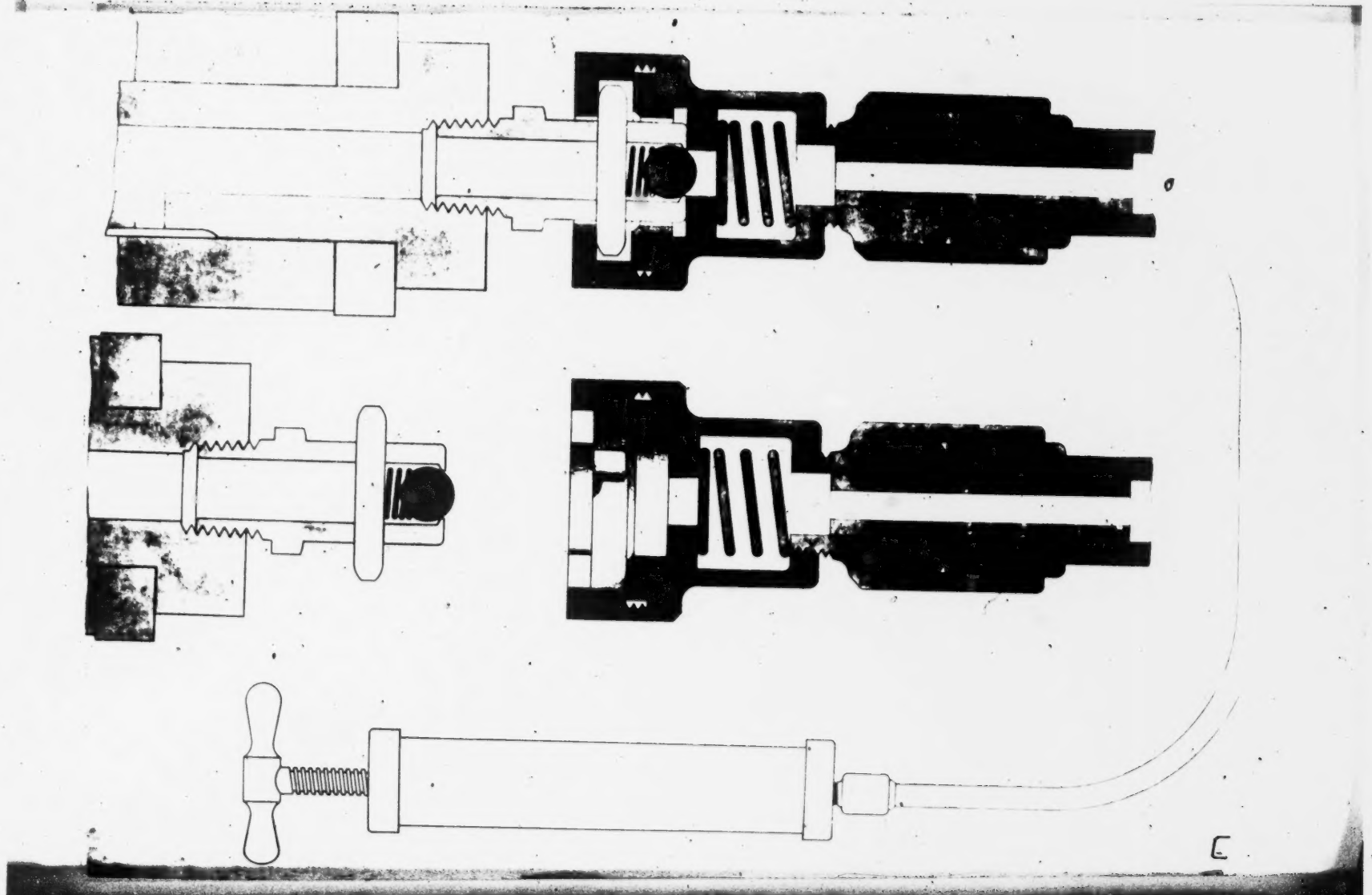

The Construction and Mode of Operation of the Couplers Previously Held By the Sixth Circuit Court of Appeals to Infringe the "Suction Effect" Claims of the Gullborg Patent 1,307,734.

Bassick v. *O. K. Manufacturing Co.*, Appeals Nos. 4571 and 4572, 6th C. C. A., 18 Fed. (2d) 29.

Opposite this page of this brief we have reproduced Plaintiff's Exhibit Chart 118, which appears at page 664 of the record of Appeals Nos. 4571 and 4572 in the Sixth Circuit Court of Appeals, in the case of *Bassick* v. *O. K. Manufacturing Company et al.*, involving Gullborg patent No. 1,307,734. This record in the O. K. case is before the court as a physical exhibit, Plaintiff's Exhibits 4-A and 4-B. The construction illustrated was one of those found to infringe by the Sixth Circuit Court of Appeals.

Adjacent this exhibit drawing is a drawing, Figure 4, of the same equipment, in which we have indicated the grease in red. The reference letters correspond with those of the Gullborg patent. We have added the reference letter C to indicate the crevice through which there is a rush of air upon the downward movement of the sealing disc 26 upon the detachment of the coupler from the pin fitting.

Here, as in the construction of the Gullborg patent, the inward rush of air through the hole or perforation in the center of the sealing disc 26 carries any excess lubricant from the head of the fitting back into the space above the sealing disc 26 within the bore 24 of the coupler.

The sale of this device by The O. K. Manufacturing Company was held by the Sixth Circuit Court of Appeals, in its opinion at 18 Fed. (2d) 29, to be an infringement of the suction effect claims of the Gullborg patent in suit.

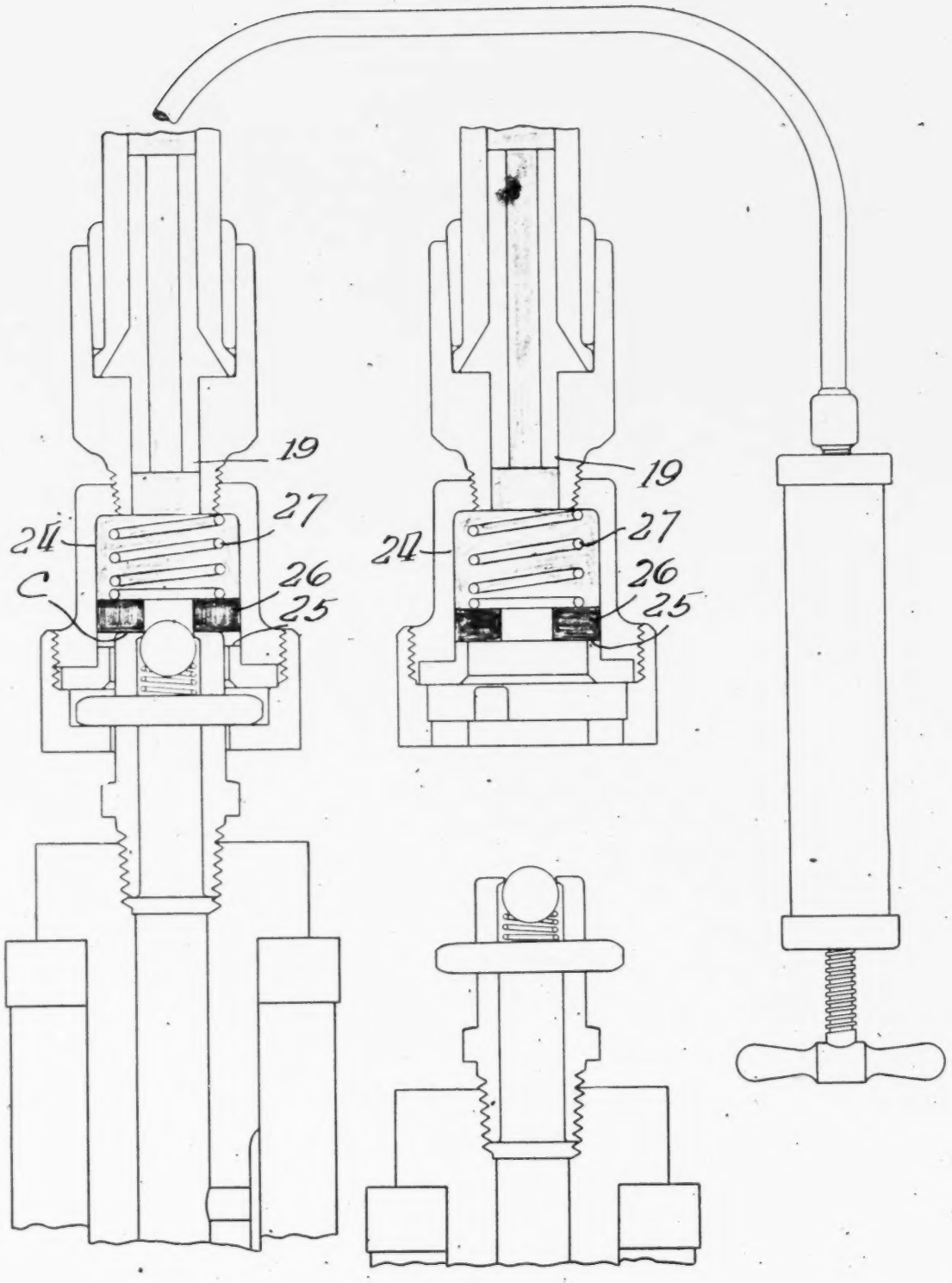

FIG. 4

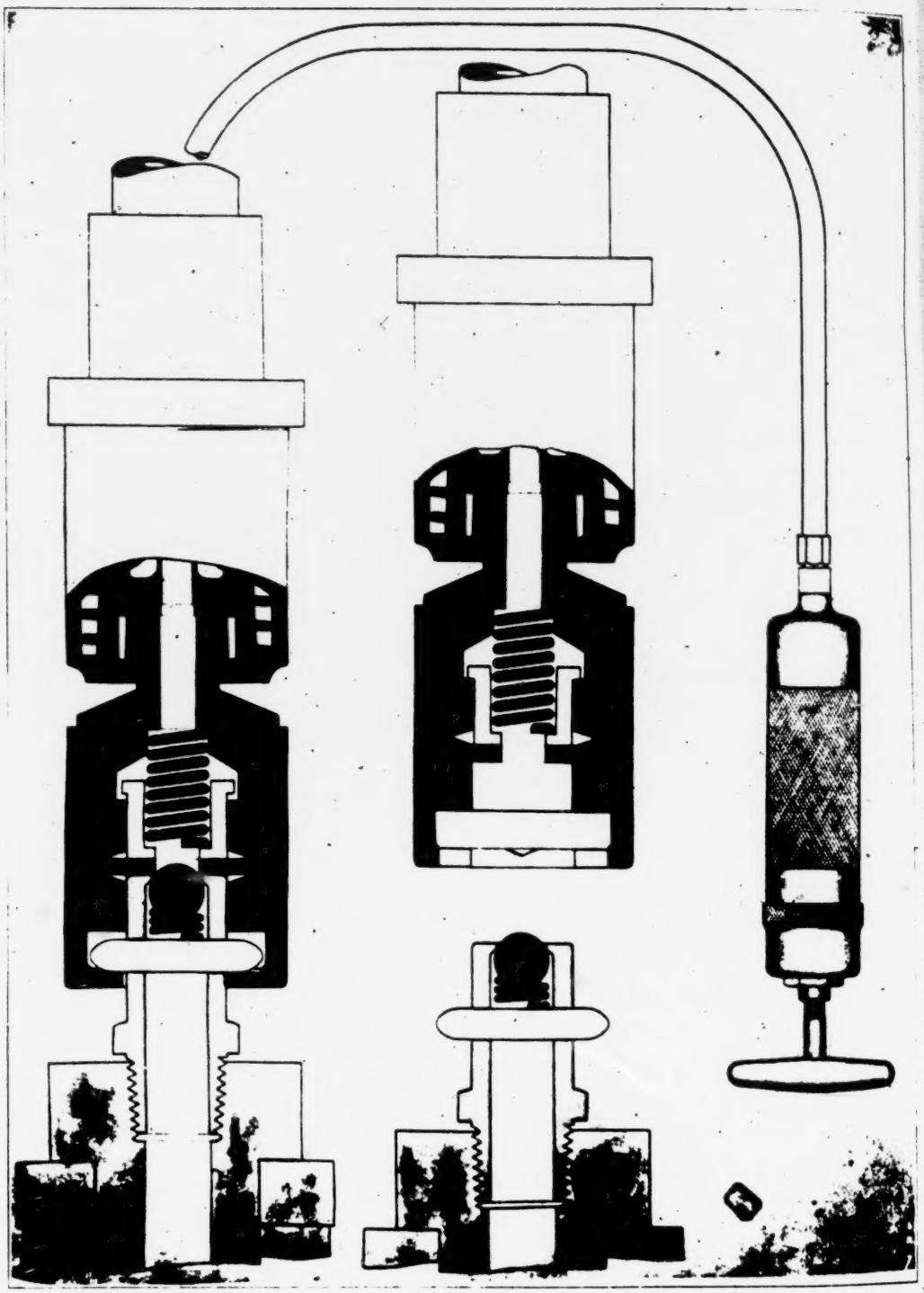

Bassick v. *The Larkin Automotive Parts Co.*, Appeals Nos. 4601 and 4766, 6th C. C. A., 18 Fed. (2d) 29.

Opposite this page of this brief we have reproduced Plaintiff's Exhibit Chart 34 in the case of *Bassick* v. *The Larkin Automotive Parts Company*, decided by the Sixth Circuit Court of Appeals. This drawing appears at page 214, Vol. IV of the record in the Larkin case, which was offered in evidence as Plaintiff's Exhibits 3-A, 3-B, 3-C, and 3-D, herein.

Adjacent this drawing of the Larkin equipment, which is one of those found to infringe by the Sixth Circuit Court of Appeals, we have reproduced the exhibit drawing as Figure 5,—adding to it reference letters corresponding with those of the Gullborg patent, and indicating in red the position of the grease during the period of injection and upon detachment of the coupler from the fitting.

In this case the sealing disc did not exactly *slide* within the bore of the coupler. The same results were secured by an equivalent construction, in which the leather sealing disc 26 was given a somewhat enlarged diameter. The outer periphery of this large sealing disc was clamped between metal shoulders. These metal shoulders were flared out toward the axis of the coupler in such a way as to permit the sealing disc to flex easily upon the attachment and detachment of the coupler. A metal thimble T was interposed between the spring 27 and the sealing disc 26 to transmit the pressure of the spring 27 to the sealing disc 26.

As shown in the left-hand view of Figure 5, the sealing disc was flexed upwardly so as to compress the spring 27 upon the attachment of the coupler to the pin fitting. Upon the detachment of the coupler from

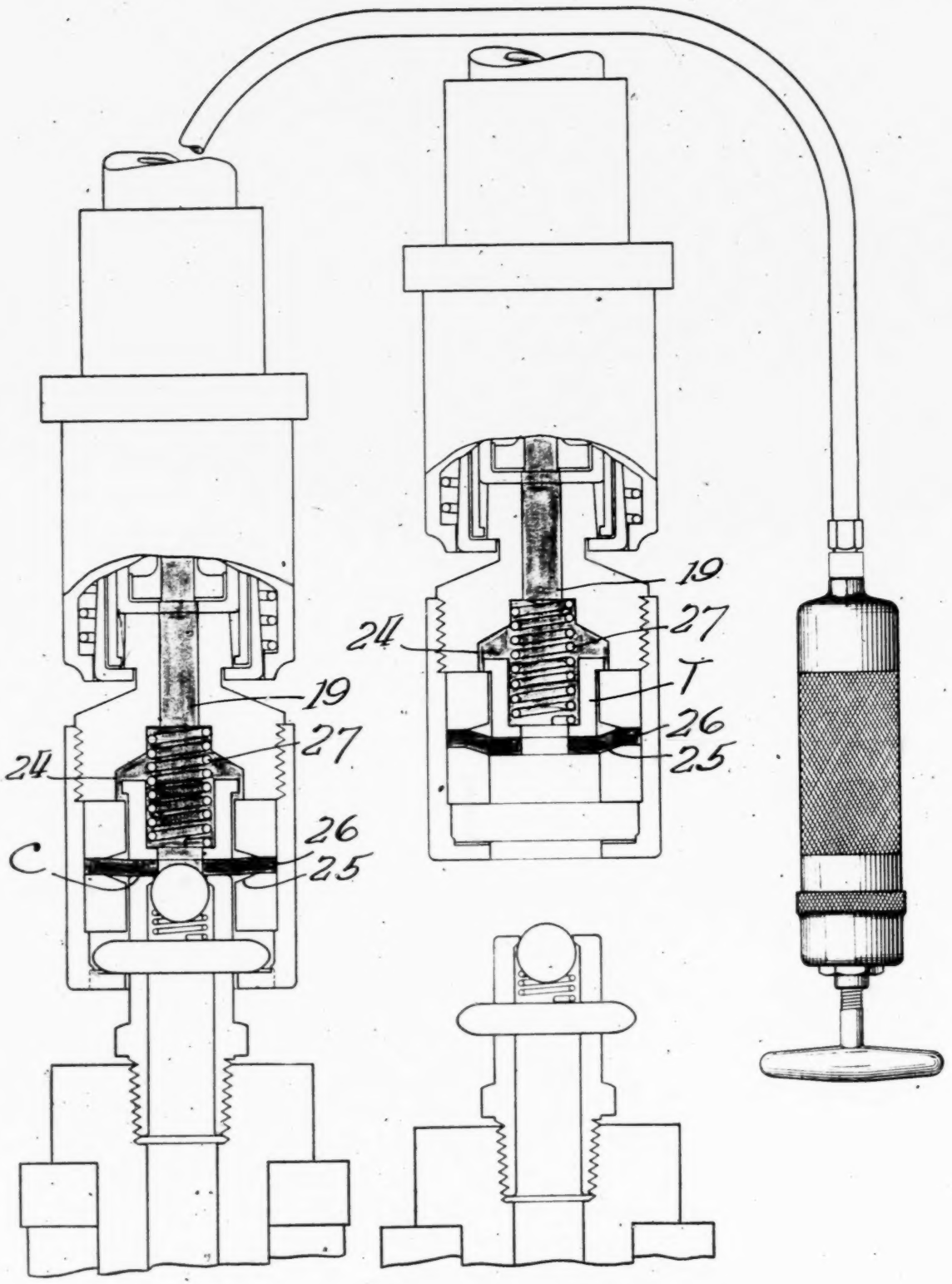

the pin fitting, the spring 27 pushed the central portion of the sealing disc 26 downwardly until it engaged the shoulder 25. This downward movement of the sealing disc at the moment of disunion enlarged the space above the sealing disc, thereby tending to create a vacuum. Here, as in the other cases, there was a tendency of the air to rush in through the crevice C to fill the space in the coupler, which the grease could not and would not expand to fill.

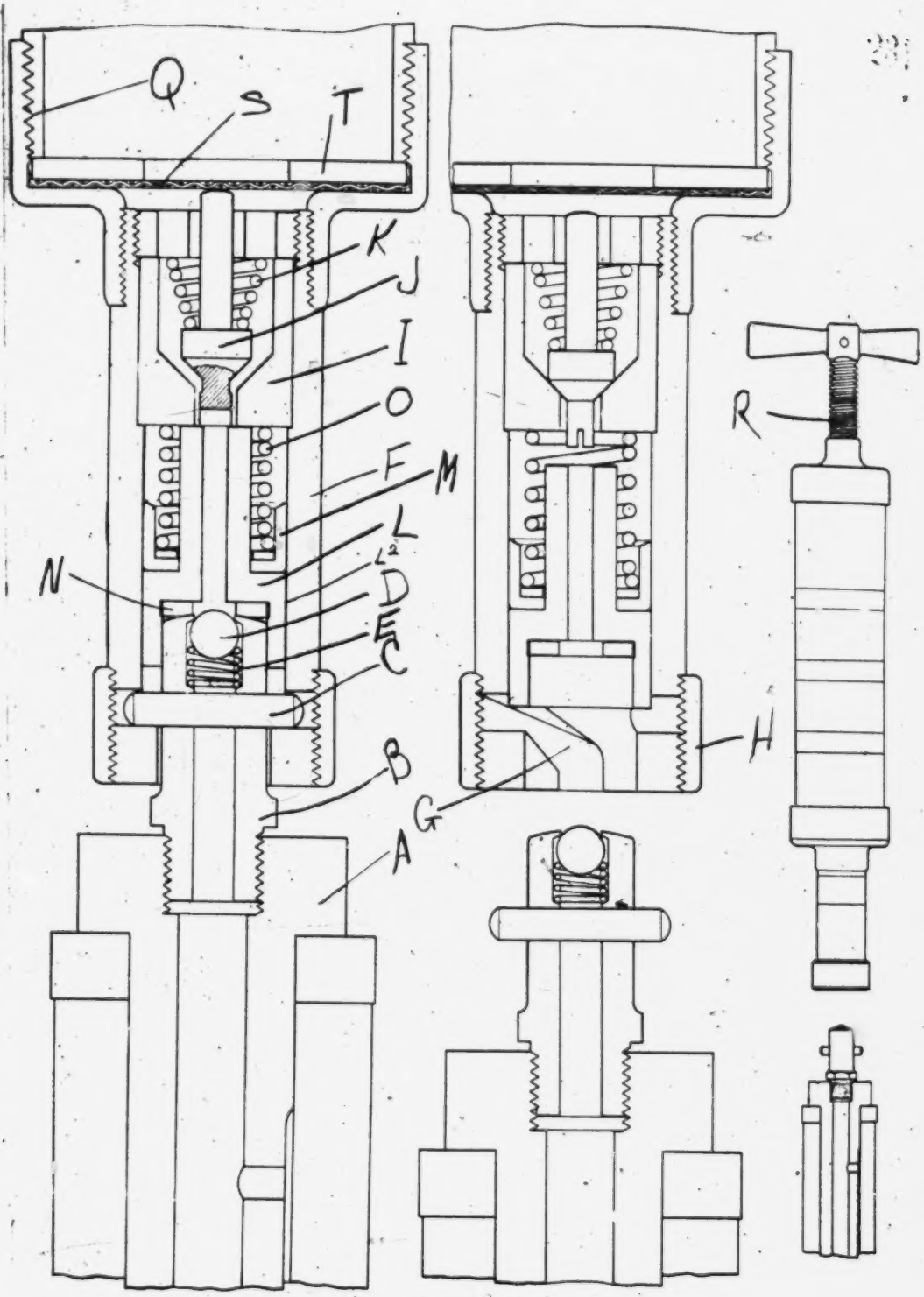

PLAINTIFF'S EXHIBIT NO. 11.
Defendant's Structure; Lyman Compressor, Coupling and Nipple.
(Filed Dec. 23, 1924.)

The Lyman Manufacturing Co. v. Bassick, Appeals Nos. 4461 and 4462, 6th C. C. A., 18 Fed. (2d) 29.

Opposite this page of this brief, we have reproduced Plaintiff's Exhibit Chart No. 11, which appears at page 231 of the record in the Sixth Circuit Court of Appeals in the case of *Lyman Manufacturing Company v. The Bassick Manufacturing Company*, Appeals Nos. 4461 and 4462, decided in the opinion reported at 18 Fed. (2d) 29. The record is in evidence here as a physical exhibit, Plaintiff's Exhibit 5.

Adjacent the drawing of the Lyman equipment we have reproduced the same drawing as Figure 6, with the addition, however, of the reference letters corresponding with those of the Gullborg patent and showing the position of the lubricant in red.

In this instance the sliding sealing member was made partly of leather and partly of metal. We have applied the reference numeral 26 to the three parts of this sliding element. The central lead line runs to the metal piston. The lower face of this metal piston was provided with a leather gasket, to which we have run the lowermost lead line from 26. At the top of this sliding metal piston there was provided a cup leather, to which we have run the uppermost lead line from the numeral 26. A central stem of metal projected upwardly from the metal part of the piston 26 to operate a valve with which we are not here concerned. There was an aperture through the metal piston and through the gasket which engaged the head of the fitting.

Here, as in the other cases, it will be seen that the space above the sealing member and within the bore 24 of the coupler is enlarged by and upon the downward movement of the sealing member under the expansive force of the spring 27.

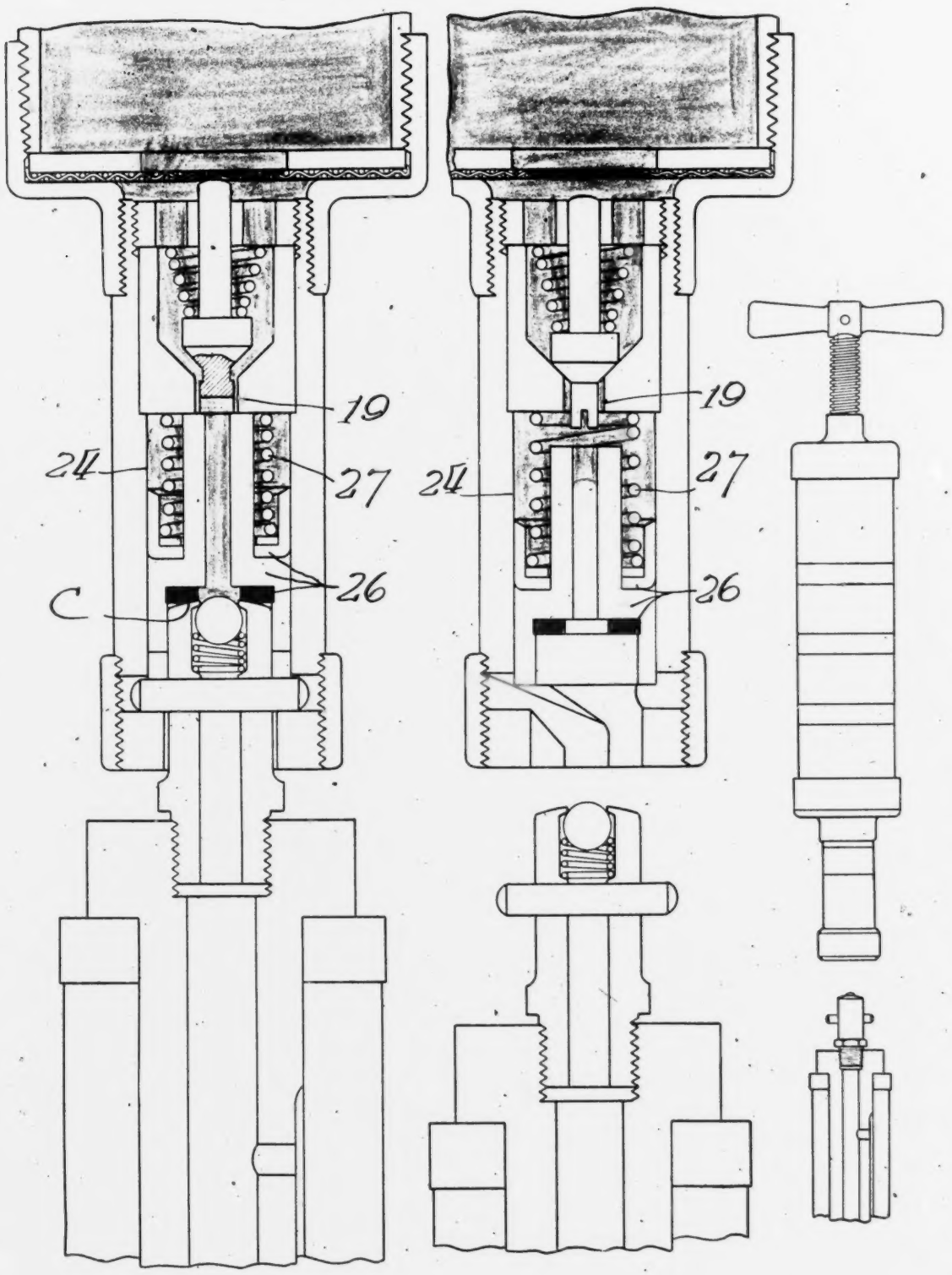

FIG. 6.

The present decision of the Sixth Circuit Court of Appeals is in conflict with these prior decisions of the same court.

In the Structure of the Gullborg Patent in Suit, As in the Case of All of the "Suction Effect" Compressors Heretofore Held By the Sixth Circuit Court of Appeals and By the Seventh Circuit Court of Appeals and By Scores of District Courts to Infringe the Suction Effect Claims of the Gullborg Patent No. 1,307,734, It Is Necessary to Relieve the Pressure Upon the Grease in Order to Secure the Advantages of the "Suction Effect".

In footnote No. 5 of the Sixth Circuit opinion, the Court said:

> "Of course, in order to allow this vacuum and suction to develop, any heavy pressure on the grease must be stopped, either by the check valve used in some forms, or by the release of the plunger pressure, or both; and if there is any failure in this relief the grease, perhaps after momentary retraction, will continue to exude."

In the case of the compressor sold by the appellant to Beezley it is just as necessary to relieve any heavy pressure upon the grease before detaching the coupler from the fitting as it is in the construction of the patent in suit and in all of the other constructions which have been held to be infringements of its suction effect claims.

The Hollingshead suction effect equipment can be operated in such a way as to destroy the utility of the suction effect by maintaining the application of a heavy pressure upon the lubricant in the conduit at the moment of disunion of the coupler from the fitting. The fact is, however, that the Hollingshead equipment can

be and normally would be operated in such a way as to relieve the pressure whereby the suction effect of the Gullborg invention is obtained. Such a relief of pressure in the Hollingshead coupler can be demonstrated in open court in three minutes.

The Sixth Circuit Court of Appeals in 18 Fed. (2d) 29, recognized the "suction effect" feature of the Gullborg construction when it granted relief against infringements involving substantially the same kind of "suction effect" equipment as was sold by the Hollingshead Company.

In discussing the Gullborg improvement over an earlier Winkley patent the Sixth Circuit Court of Appeals, at page 35 of 18 Fed. (2d), said:

> "The additional functions gained by this change in form were two; the first was that after the initial sealing was effected by the spring pressure, it was intensified and made more efficient by the pressure developed in the liquid itself. The second was that by reason of the peculiar shape of the sliding member and after it had been by the pressure of the fitting pushed up a substantial distance, upon the disunion of the parts the spring would throw it sharply down to its position of rest, leaving a vacuum behind it, and an upward inrush of air into this vacuum through the restricted opening would create a suction which would pull up into the opening the grease which at the moment of disunion had been below the opening, and which otherwise would smear up the parts and impair the cleanliness of operation. The first of these meritorious functions is not fanciful. Its existence is not only apparent from inspection but tests show that the same pressure which is developed in the conduit below the fitting,—as much as a thousand pounds if need be,—is also developed above and against the contacting bottom of this cup washer; and the actual

efficiency in this pressure is demonstrated by the test showing that while it is maintained, the fitting head and the lower side of the washer can not be disturbed in their adherence without considerable force, while when the pressure is removed they would, except for the bayonet joint, drop apart. As to the second functional merit, its theoretical existence is apparent. Its actual existence in substantial degree seems to be demonstrated by high pressure experiments and by the concurrence of the undisputed testimony that the claimed result does occur and that this is one of the efficient causes why the device has had its great success."

In Conclusion.

The coupler sold by the Hollingshead Company to Mr. Beezley is a "suction effect" coupler substantially identical in its construction and mode of operation with that of the Gullborg patent in suit, and with that heretofore and now sold by the plaintiff, and with those heretofore held by the Sixth Circuit Court of Appeals and still by the Seventh Circuit Court of Appeals (and by scores of district courts throughout the country) to infringe the "suction effect" claims of the Gullborg patent in suit. The opinion of the Sixth Circuit Court of Appeals entered in the Hollingshead case on November 14, 1934, is the only holding by any one of the many courts which have passed upon this Gullborg patent that such a device as the defendant's Beezley type gun is not an infringement of the "suction effect" claims of this Gullobrg patent No. 1,307,734.

The petitioner did not in the trial of this case undertake to introduce the testimony of any expert witnesses. It was our opinion that the subject-matter was simple, that the language was clear and unmistakable, and that

the apparatus offered in evidence was sufficient in and of itself to demonstrate its construction and mode of operation.

Furthermore, the unbridled employment of expert witnesses in patent cases has often been most emphatically condemned by the federal courts.

David et al. v. *Harris*, 206 Fed. 902, 904, Second C. C. A. 1913. Opinion by Coxe, C. J.

Kohn v. *Eimer et al.*, 265 Fed. 900, 903, 2nd C. C. A. 1920. Opinion by Learned Hand, D. J.

Ball & Roller Bearing Co. v. *F. C. Sandford Mfg. Co.*, 260 Fed. 415, D. C. Conn. 1922. Thomas, D. J.

Marconi Wireless Tel. Co. of America v. *De Forest Radio Telephone & Telegraph Co.*, 243 Fed. 560, 563, 2nd C. C. A. 1917. Opinion by Hough, C. J.

Safety Car Heating & Lighting Co. v. *Gould Coupler Co.*, 239 Fed. 861, 865, 2nd C. C. A. 1917. Opinion by Hough, C. J.

Hardinge Conical Mill Co. v. *Abee Engineering Co., et al.*, 195 Fed. 936, 940, 2nd C. C. A. 1912. Opinion by LaCombe, C. J.

Victor Talking Mach. Co. v. *Sonora Phonograph Corp.*, 221 Fed. 676, 677, D. C. S. D. N. Y. 1915. Mayer, D. J.

I. T. S. Rubber Co. v. *Essex Rubber Co.*, 270 Fed. 593, 605, D. C. Mass. 1920. Anderson, C. J.

American Stove Co. v. *Cleveland Foundry Co., et al.*, 158 Fed. 978, 985, 6th C. C. A. 1908. Opinion by Severns, C. J.

Sundh Electric Co. v. *General Electric Co.*, 204 Fed. 277, 279, 2nd C. C. A. 1913. LaCombe, C. J.

Fay v. *Mason et al.*, 127 Fed. 325, 333, 2nd C. C. A. 1903. LaCombe, C. J.

National Mach Corp. Inc. v. *Benthall Mach. Co., Inc.*, 241 Fed. 72, 86, 4th C. C. A. 1916. Opinion by Pritchard, C. J.

Fried, Krupp Aktien-Gesellschaft v. *Midvale Steel Co.*, 191 Fed. 588, 3rd C. C. A. 1911. Opinion by Buffington, C. J.

Still furthermore, at the time of the trial of the instant case the Gullborg patent in suit had been the subject of repeated litigations. Many of them had been the subject of appeals disposed of by the Sixth Circuit Court of Appeals.

The Hollingshead Company, on the other hand, did introduce expert testimony. The arguments and the conclusions of the defendant's expert were, in our opinion, best answered by the devices themselves,—which were in evidence as physical exhibits. The result is that we have had to rely, and will have to rely in this case upon the Court's examination and understanding of the devices themselves as shown by the exhibits, both paper and physical. A moment's demonstration of some of these exhibits completely refutes the contentions of the Hollingshead Company's expert witness to the effect that a check valve in the discharge conduit of the Hollingshead compressor operates in such a way as to prevent the Hollingshead Company's "suction effect" coupler from functioning in such a way as to produce the "suction effect".

If the opinion of the Sixth Circuit Court of Appeals in the present case is to stand, it means simply that the Hollingshead Company has the right to sell lubricating equipment substantially identical with that described in the patent in suit and substantially identical with

that upon which the plaintiff's entire business has been built.

It means that the Hollingshead Company alone may share in the Bassick Company's business under the patent in suit, whereas scores of defendants in other suits under the same claims of the same patent have been restrained from doing,—both by the Sixth Circuit Court of Appeals and by many other courts, including particularly (for the purposes of this petition) the Seventh Circuit Court of Appeals.

After careful consideration we have decided not to burden your Honors with a presentation or discussion of the couplers of the compressors which the Second Circuit Court of Appeals and the Third Circuit Court of Appeals, and scores of district courts have enjoined under some or all of these claims 1, 2, 3, 4, 5, 6, 8 and 10 of Gullborg patent 1,307,734.

Claims 14 and 15 of the Gullborg patent in suit are broad enough to include both "suction effect" couplers and non-suction effect couplers. The Sixth Circuit Court of Appeals held that these claims must be limited to the "suction effect" couplers. The Second Circuit Court of Appeals and the Third Circuit Court of Appeals have not so regarded these claims 14 and 15. But, even if they be limited in some way to the suction effect coupler, they are nevertheless infringed by the coupler sold by the Hollingshead Company to Beezley.

Specification of Errors.

The specification of errors which your petitioner will urge if the writ of certiorari is granted, is that the Circuit Court of Appeals for the Sixth Circuit erred:

In finding that claims 1, 2, 3, 4, 5, 6, 8, 10, 14 and 15 of the Gullborg patent No. 1,307,734 were not infringed by the Hollingshead Company's sale of lubricant compressors and suction effect couplers of the type identified herein as Exhibit A, Beezley affidavit.

From the foregoing it appears that the Circuit Court of Appeals for the Sixth Circuit has rendered a decision of such a nature as to justify the issuance of a writ of certiorari for its review and one which has seriously prejudiced the rights of your petitioner.

Respectfully submitted,

LYNN A. WILLIAMS,
ALBIN C. AHLBERG,
Counsel for Petitioner.

34

APPENDIX.

List of Cases in Which Petitioner's Gullborg Patent No. 1,307,734 Was Found Valid and Infringed.

This list includes all of the cases in which decrees were obtained, whether by consent, default, or after contest.

Petitioner was known as The Bassick Manufacturing Company until September 17, 1928, whereupon the corporate name was changed to Alemite Manufacturing Corporation. On May 13, 1929, the corporate name was changed to Alemite Corporation.

Defendant		Date of Decree	Reported
Adams Grease Gun Corp.	N. Y.	Dec. 21, 1931	53 Fed. (2d) 36
A. E. A. Mfg. Co., Inc.	N. Y.	Oct. 11, 1927	
Airshot Lubrication Co.	Ohio	Aug. 22, 1927	
Airshot Manufacturing Co.	Kan.	Sept. 19, 1932	
Alexander, H. and Hrusa, F. C.	Calif.	Mar. 10, 1930	
Aloia, Joseph	N. Y.	Jan. 5, 1929	
Alper, David	Calif.	Dec. 16, 1929	
Aluminum Screw Machine Products Co.	N. J.	Jan. 17, 1928	
American Luberite Corp.	N. Y.	June 25, 1929	
Auto Equipment Co.	Ind.	July 6, 1926	13 Fed. (2d) 463
Auto Equipment Co., Inc.	Tex.	Dec. 9, 1927	
Auto Supply Co., Inc.	Miss.	July 3, 1929	
Automotive Specialty Corp.	N. Y.	Sept. 26, 1927	
Ballou & Wright	Wash.	Feb. 23, 1928	
Barsook, Henry	Mich.	Sept. 11, 1930	
Bearing Supply Co.	Wash.	July 25, 1930	
Beckley-Ralston Co.	Ill.	Jan. 10, 1928	
Bel-Mel Corp.	Ill.	May 12, 1930	
Bercovich, J.	Calif.	Dec. 2, 1929	
Bercovich, M.	Calif.	Mar. 10, 1930	
Berkson, Mae	Ohio	Feb. 10, 1928	
Berlin, David	Mich.	Oct. 14, 1930	
Berlin, F. A.	D. C.	Jan. 23, 1928	
Biddle Purchasing Co.	N. Y.	Jan. 30, 1931	
Blain, W. P.	Ill.	July 1, 1925	
Blumenkopf, Henry	N. Y.	Feb. 4, 1930	
Borderland Auto Supply Co.	Tex.	Sept. 1, 1926	
Boston Pressed Metal Co.	Mass.	Sept. 12, 1927	
Boyer, A. J.	Mass.	Sept. 11, 1930	
Brandfield Corp.	N. Y.	Mar. 9, 1932	
Brandmeier, August T., August T. Brandmeier Corp. and Kelwax Corp.	N. Y.	Feb. 15, 1934	
Brown, M.	N. Y.	Oct. 2, 1934	
Brown & Green Ignition Sales Co.	N. Y.	June 26, 1928	
Burns, W. E.	Ore.	Sept. 11, 1925	
Byron, S.	Ill.	Sept. 22, 1927	

Defendant		Date of Decree	Reported
California Dairies	Calif.	Feb. 18, 1929	
Carpenter, N. A.	N. Y.	Nov. 15, 1928	
Carson Equipment Co.	N. Y.	Mar. 18, 1929	
Cartman, S. J. and J. A.	Calif.	Mar. 7, 1930	
Cavanec, F. and Smith, W. D.	Kan.	Sept. 30, 1931	
Champion Hy-Pressure Mfg. Co.	N. Y.	Feb. 25, 1925	
Chanslor & Lyon Co.	Calif.	Feb. 6, 1929	
Chapman, D. L. and F. R.	Colo.	Jan. 26, 1929	
Chicago Auto Equipment Co.	Ill.	Oct. 15, 1929	
Chicago Automobile Supply House	Ill.	Oct. 15, 1929	
Clark, A. B. et al.	Calif.	Aug. 25, 1933	
Clarksberg Tire Co.	W. Va.	Apr. 12, 1932	
Coffman, W. R.	W. Va.	Apr. 12, 1932	
Cohan, George	N. Y.	Nov. 28, 1930	
Cohen, Gottlieb	N. Y.	Apr. 4, 1928	
Cohen, J. M. and M. A.	Mass.	Nov. 18, 1925	
Cohn, Morris D.	Calif.	Jan. 29, 1932	
Coliseum Battery Co.	Ill.	Oct. 15, 1929	
Commonwealth Screw Co.	Mass.	Jan. 28, 1926	
Community Motor Supply Co.	Ill.	June 16, 1927	
Continental Sales Co.	Ill.	Sept. 29, 1925	
Continental Tire Corp.	Ill.	Mar. 16, 1926	
Cook Auto Machine Co.	Ark.	Oct. 17, 1929	
Cook, J. B., Auto & Machine Co.	Tenn.	Jan. 2, 1926	
Coombs, C. B.	Ind.	Oct. 27, 1933	
Cronin Co., P. J.	Ore.	Apr. 13, 1928	
Curtice, E. S. and Clark, E. O.	Miss.		
Curtis & Christensen, Inc.	Calif.	Feb. 15, 1930	
Cussins & Fearn Co.	Ohio	Apr. 9, 1927	
C. & G. Manufacturing Co.	Ill.	Jan. 8, 1926	
Dawson, S. and Temple, R.	Ill.	Oct. 26, 1931	
Doliva, George	Mich.	Sept. 11, 1930	
Doyle, Larry	Calif.	June 10, 1931	
Drapery Hardware Mfg. Co.	N. Y.	Oct. 18, 1928	
Drolet & O'Brien Co.	Ill.	Oct. 15, 1930	
Eastern Machine Co. et al.	N. Y.	July 22, 1932	
E. G. Mfg. Co., Inc.	N. Y.	Dec. 5, 1927	
Eisenberg, B. and L.	N. J.	Dec. 16, 1931	
Fairchild, Roger	Conn.	Aug. 23, 1932	
Farnsworth, R. and Callahan, T. J.	Calif.		
Farrell Auto Supply Co., Inc.	N. Y.	Aug. 23, 1929	
Farwell, Ozmun, Kirk & Co.	Minn.	Nov. 14, 1928	
Faught, A. E. and Windmiller, H. J.	Tex.	May 18, 1927	
Feldman, L.	Ill.	Dec. 6, 1927	
Fischer, J. Waterman	Calif.	Aug. 24, 1926	
Flamm, Samuel A.	Pa.	Jan. 24, 1930	
Fly, William L.	Mo.	Nov. 19, 1925	
Franklin Auto Supply Co.	R. I.	May 18, 1928	
Froehling Mfg. Co.	Ill.	Dec. 10, 1923	
Fromm, Eric	Mich.	Sept. 30, 1930	
Gaines Motor Sales Co.	Tex.	Apr. 9, 1927	
Garelick, Jake	Mich.	Oct. 15, 1930	
Gavin Co., P. W.	Calif.	Dec. 27, 1926	
Gelier, Ward & Hasner Hardware Co.	Mo.	Apr. 15, 1926	
Gibson Company, The	Ind.	July 12, 1927	
Gillette, S. H.	Calif.	Dec. 11, 1929	

Defendant		Date of Decree	Reported
Globe Sales Co. and W. S. Rea	Minn.	Nov. 28, 1932	
Glyder, Morris J.	N. Y.	Feb. 2, 1932	
Godbey, John S.	Ohio	June 25, 1928	
Gold, J. N. and Marinoff, J.	Pa.	Jan. 21, 1929	
Goldberg, S.	N. Y.	June 29, 1929	
Gould-Mersereau Co.	N. Y.	Feb. 9, 1928	
Grant-Dadey Co.	N. D.	May 25, 1927	
Gray Co., Inc.	Minn.	July 28, 1932	
Grease-Rite Pneumatic Gun Co.	Colo.	Nov. 1, 1927	
Greenberg, H. and Jacobs, B.	R. I.	Jan. 22, 1932	
Green, Howard C.	Calif.	Oct. 16, 1929	
Gresser Manufacturing Co.	Mich.	May 15, 1930	
Griswold-Sohl Co.	Ohio	Sept. 10, 1925	
Gross Hardware & Supply Co., Ph.	Wis.	Oct. 19, 1927	
Gulotta, Charles	N. Y.	May 28, 1929	
Haiden Auto Parts, Inc.	Calif.	Sept. 5, 1929	
Hamerschlag, E.	N. Y.	Feb. 18, 1935	
Harris, Max, and Engert, Hyman E.	Ill.	Jan. 10, 1934	
Harris, Roger and Coleman, L. R.	Conn.	Apr. 11, 1933	
Harris, S. and Hirsch, R.	Ill.	Oct. 8, 1930	
Hartman, John J.	Calif.	Aug. 30, 1929	
Hasford, C. B.	Tex.	Mar. 19, 1935	
Hassell, Inc., John	N. Y.	May 3, 1929	
Haynes, W. W. and Patrick, S. A.	Okla.	July 16, 1927	
Hickman, Paul W.	Pa.	Feb. 7, 1930	
Hi-Pressure Sales Co., Inc.	Calif.	May 7, 1934	33 Fed. (2d) 912
Hittelman, R.	Calif.	May 25, 1931	
Hockaday, Harlow & Phillips	Calif.	Sept. 11, 1929	
Hofer, Jacob, Inc.	N. Y.	Nov. 15, 1928	
Holliday, W. J. & Co.	Ind.	May 28, 1927	
Horst & Wilkinson Co., Inc.	Iowa	Nov. 19, 1928	
Huber, J. F. and F. S.	Calif.	Nov. 29, 1929	
Hunter, William J.	N. Y.	Nov. 29, 1926	
Hygrade Machine Products Mfg. Co., Inc.		May 27, 1929	
Ideal Auto Supply Co.	Ill.	Oct. 15, 1929	
Inter-Mountain Electric Co.	Utah	Dec. 19, 1929	
Jacobs, I. H.	Calif.	Mar. 10, 1930	
Jaffe, Harry E.	Ill.	Apr. 8, 1926	
Jawers Auto Supply Store	Pa.	July 1, 1930	
Johnston, Mose	Ohio	Nov. 11, 1927	
Jones, J. Elmer	Mo.	June 30, 1927	
Jones, V. P.	Calif.	May 6, 1931	
Jones, Wesley J.	Kan.	July 8, 1929	
Justus & Parker Co.	Ohio	Jan. 26, 1929	
Kansas City Filling Station Supply Co.	Mo.	Jan. 9, 1928	
Kantor, Max	N. Y.	Dec. 8, 1933	
Kavanaugh, A. W. et al.	Okla.	Oct. 14, 1929	
Kellogg Mfg. Co.	N. Y.	Apr. 1, 1930	
Kelly-How-Thomson Co.	Minn.	Jan. 2, 1929	
Kirk, A. L.	Calif.	Nov. 12, 1934	
Kirkpatrick, D. B.	Calif.	Apr. 3, 1931	
Klein, Dan	N. Y.	Apr. 9, 1932	
Koehler, A. G. and Koehler, E. T.	Conn.	Oct. 17, 1927	
Kohorn, S. N. and Gup, M.	Ala.	Dec. 8, 1925	
Korchel, George	N. Y.	Jan. 5, 1929	

Defendant		Date of Decree	Reported
Kragen, M.	Calif.	Mar. 24, 1930	
Kramer, M. S.	N. Y.	Nov. 20, 1928	
Kraus, Joseph	Calif.	Sept. 11, 1929	
Kretzer, L. and Seger, C.	N. Y.	July 9, 1928	
Laidhold, Nat	N. Y.	Nov. 13, 1928	
Lamb, B. W.	Kan.	Oct. 2, 1928	
LaMaskin-Berger Co.	Ill.	Nov. 7, 1934	
Larkin Automotive Parts Co.	Ohio	June 7, 1928	18 Fed. (2d) 29
Larkin Automotive Parts Co., et al.	Ill.	June 1, 1928	19 Fed. (2d) 944
Lerer, E. S. and D. M.	Calif.	Mar. 10, 1930	
Leseberg, W. L.	Calif.	Dec. 16, 1929	
Leverstone Sales Co.	Ill.	Dec. 20, 1926	
Linden Auto Sales Co.	N. Y.	Feb. 4, 1930	
Livingston, S. S.	Calif.	June 15, 1931	
Lloyd, A. S. c	Calif.	Dec. 2, 1929	
Lovering, Charles E.	Ohio	June 8, 1925	
Lowe Motor Supplies Co.	N. Y.	Apr. 16, 1927	
Lyman Manufacturing Co.	Ohio	Mar. 18, 1927	18 Fed. (2d) 29
Lyons, J. S.	Okla.	Apr. 9, 1925	
McCauley, C. et al.	Tex.	Mar. 17, 1928	
McCracken, L. S.	Okla.	Oct. 9, 1929	
Maher, Richard D.	Mich.	Mar. 12, 1928	
Malisoff, Fanny	Calif.	Nov. 29, 1929	
Mandel, Conrad	Ill.	Sept. 22, 1927	
Manhattan Mirror Works	N. Y.	Feb. 19, 1930	
Marcus, Henry	Ill.	Sept. 6, 1924	
Marshall-Wells Co.	Minn.	Jan. 2, 1929	
Martin, James	N. Y.	Feb. 23, 1928	
Matras & Sons, Inc.	Wis.	Oct. 14, 1927	
May Screw Products Co.	Mich.	Jan. 8, 1932	
Mee-Oakes Co.	Okla.	Jan. 4, 1926	
Midwest Machinery Products Co.	Ill.	May 6, 1925	
Miller Company	Tex.	Mar. 17, 1928	
Miller, Otto A.	Ohio	May 13, 1926	
Miller's Brass Fitting Co., Inc.	N. Y.	July 3, 1928	
Mills Morris Co.	Tenn.	Apr. 27, 1928	
Min-a Max Company	Minn.	Oct. 29, 1934	
Minthorn, L. L.	N. Y.	Sept. 12, 1928	
Moore-Handley Hardware Co.	Ala.	Dec. 16, 1927	
Moore Hardware & Iron Co.	Colo.	Apr. 9, 1929	
Moore, John M.	Okla	June 11, 1927	
Moore, L. L. and Wood, J. Carlisle	Tex.	Nov. 2, 1932	
Morgan, G. B. et al.	Tex.	June 28, 1932	
Morgan Manufacturing Co., Inc.	Del.	Sept. 5, 1928	
Morris, M. E.	Calif.	Mar. 10, 1930	
Morris, Vernon	Calif.	Dec. 20, 1929	
Morrison's, Inc.	Utah	Aug. 31, 1929	
Motive Parts Co. of America	Ill.	Dec. 27, 1928	
Motor Equipment Co.	Kan.	Mar. 15, 1928	
Motor Parts Co.	Pa.	Jan. 24, 1930	
Motor Parts Depot, Inc.	Tex.	June 4, 1926	
Muller, W. J. and F. B.	Calif.	Dec. 13, 1929	
Munoz, Alfred	N. Y.	Nov. 15, 1928	
Nath, Louis	N. Y.	Nov. 17, 1934	
National Acme Co.	Ohio	June 30, 1925	
National Auto Electric Co.	N. Y.	Nov. 13, 1928	
National Lubricator Corp.	N. Y.	June 18, 1929	
National Service Co.	D. C.	May 13, 1926	

Defendant		Date of Decree	Reported
New Britain Machine Co.	Conn.	Sept. 10, 1927	
New England Mills Co.	Ill.	Mar. 16, 1926	
Nichoalds Co.	Mich.	Feb. 25, 1927	
Nichols, Dean & Gregg	Minn.	Nov. 14, 1928	
Nielsen, Walter	Calif.	Mar. 10, 1932	
Norris, John E.	Mich.	Feb. 6, 1928	
Nurkiewicz, Ignatius	N. Y.	Jan. 5, 1929	
Nusbaum Motor Supply Co.	Mich.	Dec. 30, 1929	
O. K. Manufacturing Co. et al.	Ohio	Dec. 13, 1927	18 Fed. (2d) 29
Olson, Fred L.	Kan.	Dec. 6, 1926	
Orgill Bros. & Co., Inc.	Tenn.	Jan. 5, 1931	
Orr Iron Co.	Ind.	Oct. 10, 1927	
Pacific Lubrication Engineering Co.	Calif.	Mar. 14, 1932	
Paco Accessories, Inc.	Ohio	Apr. 29, 1932	
Paine, Kenneth, and Houde, A.	Mass.	Jan. 24, 1932	
Parts Engineering Co.	Pa.	Feb. 20, 1928	
Paysen, Andrew	Iowa	Nov. 2, 1926	
Pearlman, William	Ill.	June 16, 1927	
Peck Spring Co.	Conn.	Dec. 12, 1927	
Peerless Automatic Machine Co.	Ohio	Sept. 27, 1928	18 Fed. (2d) 29
Pep Auto Supply Co.	Pa.	Nov. 16, 1928	
Peterson, B. W.	Conn.	Nov. 26, 1929	
Phipps, F. H. and Duffey, A. F.	Tex.	May 24, 1929	
Pittsburgh Parts Mfg. Co.	Pa.	Sept. 23, 1927	
Pittsburgh Tire Sales Co.	N. Y.	Dec. 12, 1927	
Plant Co.	Minn.		
Poncher, Louis	Ill.	June 16, 1927	
Porte Mfg. Co.	N. Y.	June 26, 1926	
Post & Lester Co.	Conn.	Nov. 8, 1927	
Pruden Hardware Co., W. E.	N. Y.	Apr. 26, 1927	
Quaker Auto Supply Stores	Pa.	Dec. 7, 1928	
Ramsey Motor Service, Inc.	Minn	Nov. 14, 1928	
Ready Auto Supply Co.	N. Y.	Dec. 30, 1927	22 Fed. (2d) 331
Rex Metal Mfg. Co.	Pa.	Oct. 10, 1934	
Rhode Island Machine & Tool Co.	R. I.	July 9, 1921	
Rieth, Harvey L.	Ohio	June 8, 1925	
Riggs Tire & Supply Co.	Ohio	June 18, 1927	18 Fed. (2d) 29
Riley, P. J.	Ohio	Nov. 16, 1928	
Robertson, William & Sons	Ill.	Apr. 15, 1930	
Robey, H. C. and B. T.	Wash.	June 17, 1926	
Rockmore, N. and Gross, L.	N. Y.	Jan. 3, 1930	
Rogers, G. S. and Dusenberry, R. W.	Pa.	Jan. 19, 1934	74 Fed. (2d) 1019
Roth & Schlenger, Inc.	N. J.	Dec. 16, 1931	
Samuel, I. and B. and J.	Pa.	Feb. 7, 1930	
Saslove, A. and Fisher, S.	Mich.	Jan. 15, 1931	
Sayer, R. S., Jr.	Pa.	Jan. 21, 1930	
Scheffer & Rossum Co.	Minn.	Nov. 14, 1928	
Schlegel, N.	Calif.	Sept. 11, 1929	
Schneer, Emil	N. Y.	Nov. 14, 1928	
Schwartz, D. et al.	N. Y.	Nov. 20, 1928	
Scott, John P.	D. C.	Feb. 8, 1926	
Scott, Carl L.	Calif.	Feb. 5, 1930	
Scovill Mfg. Co.	Conn.	Aug. 14, 1925	
Seedman Automotive & Radio Co., Inc.	N. Y.	Oct. 26, 1929	
Seigel, David	Iowa	Apr. 28, 1924	

Defendant		Date of Decree	Reported
Self, J. M.	Pa.	Apr. 9, 1925	
Shadbolt & Boyd Co.	Wis.	Oct. 21, 1927	
Shawnee Motor Supply Co.	Okla.	Mar. 24, 1927	
Sheridan Auto Supply Co.	Ill.	Oct. 15, 1929	
Sickler, C. F. and Gebhart, G.	Calif.	Feb. 9, 1933	
Siefert, Charles et al.	Ohio	Apr. 11, 1932	
Simmons Mfg. Co.	Ohio	Dec. 5, 1927	
Simon, D. and Feuer, M.	N. Y.	Apr. 23, 1930	
Smith, Barney, and Smallwood, Fred	Tex.	Jan. 15, 1934	
Smith, R. L.	Calif.		
Snow, William and R. H.	Wash.	Oct. 1, 1928	
Sol's Auto Supply	Calif.	Jan. 5, 1932	
Sommer, Herman C.	Calif.	June 7, 1932	
Southern Motor Supply Co.	Okla.	Apr. 9, 1925	
Specialty Sales & Service, Inc.	Minn.	Dec. 26, 1931	
Sper, Norman L.	N. Y.	Nov. 21, 1929	
Staff, John	N. Y.	Aug. 6, 1926	
Staff, Joseph	N. Y.	May 21, 1931	
Stage, C. C. and Miller, J. L.	Neb.	Oct. 2, 1931	
Standard Products Mfg. Co.	Del.	Jan. 9, 1926	19 Fed. (2d) 937
Stetson, John P.	N. Y.	Oct. 18, 1928	
Straus-Frank Co.	Tex.	Jan. 28, 1928	
Tacoma Auto Supply Co., Inc.	Wash.	Apr. 24, 1933	
Taubman Automotive Co.	Md.	Mar. 15, 1927	
Tharp Machine Products Co.	Ill.	Oct. 15, 1929	
Triangle Automotive Parts Co.	Wash.	Oct. 16, 1933	
United Grease Gun Corp.	N. Y.	Sept. 6, 1929	40 Fed. (2d) 549
United States Auto Supply Co, Inc.	N. Y.	July 11, 1929	
United States Screw & Stamping Co.	Mass.	May 9, 1928	
Universal Automotive Supply Co.	Ill.	Oct. 15, 1929	
Up-to-Date Machine Works	Ill.	Jan. 8, 1925	
Van Horbek, W. C.	Utah	Dec. 9, 1925	
Vaughn Auto Supply Co.	Calif.	Nov. 29, 1929	
Vesuvius Corp.	Ill.	Sept. 22, 1927	
Wag's Auto Accessories	Onio	June 18, 1927	18 Fed. (2d) 29
Wagner, Paul G.	Calif.	Nov. 17, 1931	
Wallach Bros. Co.	Ohio	Dec. 13, 1927	
Walsh Tire Co.	Ill.	Jan. 12, 1926	
Warner, Benjamin	Ill.	Feb. 12, 1923	
Warner Hardware Co.	Minn.	May 7, 1926	
Warnke, F. W.	N. Y.	Apr. 2, 1930	
Webb, A. E. and C.	Okla.	Dec. 14, 1929	
Wellworth Auto Supply Co.	N. Y.	June 28, 1926	
Western Auto Supply Co.	Mo.	Mar. 23, 1926	
Whittle, William H.	Ohio	June 8, 1925	
Winner, M. A. and Stone, C. C.	Ill.	Feb. 17, 1926	
Wisco Products, Inc.	Wis.	Feb. 9, 1934	
Wronker, H. A.	Ill.	June 16, 1927	
W. S. Auto Supply Co., Inc.	Tex.	Apr. 9, 1927	
Yankee Automotive Trading Co.	N. Y.	Oct. 2, 1934	
Yant, D. L. et al.	Calif.	Jan. 30, 1933	
Yeamans, W. H.	Calif.	Oct. 8, 1934	
Yellow Cab Co.	Calif.	Dec. 13, 1929	
Zimmerlin, J. and A. P. and L.	Calif.	Dec. 2, 1929	
Zumpano, Edward	N. Y.	Nov. 5, 1930	

FILE COPY

MAY 17 1935

SUPREME COURT OF THE UNITED STATES

OCTOBER TERM, 1934.

No. ~~828~~ 23

THE BASSICK MANUFACTURING COMPANY,
Plaintiff-Petitioner,

vs.

THE R. M. HOLLINGSHEAD COMPANY,
Defendant-Respondent.

SUPPLEMENT TO PETITION FOR WRIT OF CERTIORARI.

LYNN A. WILLIAMS,
ALBIN C. AHLBERG,
Counsel for Petitioner.

Eastman Bros., Inc., Law Printers, 542 S. Dearborn St., Chicago.

SUPREME COURT OF THE UNITED STATES

OCTOBER TERM, 1934.

No. 872.

THE BASSICK MANUFACTURING COMPANY,
Plaintiff-Petitioner,

vs.

THE R. M. HOLLINGSHEAD COMPANY,
Defendant-Respondent.

SUPPLEMENT TO PETITION FOR WRIT OF CERTIORARI.

May it please the Court:

Supplementing the Petition for a Writ of Certiorari filed herein on April 13, 1935, we respectfully call the attention of the Supreme Court to the fact that a Petition for a Writ of Certiorari has been filed in this Court on April 24, 1935, in the cause of *G. S. Rogers et al.* v. *Alemite Corporation*, No. 906, in which the question sought to be reviewed in this Court is that of the scope and infringement of claims 1, 2, 3, 4, 8, 14 and 15 of

United States Letters Patent No. 1,307,734, which is substantially the same issue as that to which the Petition for a Writ of Certiorari in this cause is directed.

The issue, as made by the petition in No. 906, is, because of the inclusion of claims 14 and 15, actually somewhat broader than that raised by the petition in this cause. Inasmuch as it may be convenient to consider these causes together, this petitioner is willing to submit this cause upon the broad issue as made in No. 906.

In the Petition in cause No. 906 the decision of the Circuit Court of Appeals for the Sixth Circuit which is sought to be reviewed by the Petition in this cause, *The R. M. Hollingshead Company* v. *The Bassick Manufacturing Company*, 73 Fed. (2d) 543, is relied upon as creating a conflict with certain other decisions of the First, Third, and Sixth Circuit Courts of Appeals. The Petition in No. 906 says, on page 13:

> "Moreover, said decision of this question of patent law by said Circuit Court of Appeals for the Third Circuit is in direct conflict with the following decisions of other Circuit Courts of Appeal involving the patent here in suit:
>
> *Lyman et al.* v. *Bassick*, 18 Fed. (2d), 29 (C. C. A., 6th);
>
> *Alemite* v. *Lubrair*, 62 Fed. (2d), 899 (C. C. A., 1st);
>
> *Hollingshead* v. *Bassick*, 73 Fed. (2d), 543 (C. C. A., 6th)." . . .

> "The direct conflict between the decision of the Circuit Court of Appeals for the Third Circuit (74 Fed. (2d), 1019), in the case at bar and the earlier decision of the Circuit Court of Appeals for the Sixth Circuit in *Hollingshead* v. *Bassick* (73 Fed. (2d), 543), is also asserted by the respondent in the case at bar in the petition for writ

of certiorari (No. 872, October Term, 1934), in the case of *Bassick Mfg. Co.* v. *The R. M. Hollingshead Company* (page 8)."

There are thus before the Supreme Court two Petitions for Writs of Certiorari, seeking review of conflicting decisions of the Circuit Courts of Appeals for the Third and Sixth Circuits, respectively, both relating to the question of the scope and infringement of the claims of United States Letters Patent No. 1,307,734, presenting both sides of the conflict arising from the decisions sought to be reviewed, and both relying upon the conflict so presented as well as conflicts between the decisions for which review is sought and other decisions of other Circuit Courts of Appeals.

We respectfully submit that this contemporaneous presentation to the Supreme Court of these conflicting decisions is further cogent reason why the Petition for a Writ of Certiorari herein should be granted.

Respectfully submitted,

LYNN A. WILLIAMS,
ALBIN C. AHLBERG,
Counsel for Petitioner.

OCT 3 1935

FILE COPY

SUPREME COURT OF THE UNITED STATES

OCTOBER TERM, 1935

No. 23.

THE BASSICK MANUFACTURING COMPANY,
Plaintiff-Petitioner.

vs.

THE R. M. HOLLINGSHEAD COMPANY,
Defendant-Respondent.

BRIEF ON BEHALF OF PLAINTIFF-PETITIONER.

LYNN A. WILLIAMS.
ALBIN C. AHLBERG.
ELWOOD HANSMANN.
Counsel for Plaintiff-Petitioner,
2300 Board of Trade Building,
Chicago, Illinois.

Eastman Bros., Inc., Law Printers, 542 S. Dearborn St., Chicago

INDEX.

A list of the cases in which Gullborg patent No. 1,307,734, has been involved with reference to the official reports of the opinions delivered in the courts below, in so far as they have been reported 1

A concise statement of the grounds on which the jurisdiction of this court was invoked and assumed 8

A concise statement of the case 9

Petitioner's business under the Gullborg patent in suit 16

The Hollingshead Company's business 21

A concise statement of the question involved 23

The validity of the Gullborg patent has been conceded by the respondent, Hollingshead Company 24

In its first appeal No. 5397, the Hollingshead Company did not question the correctness of the decree holding it guilty of infringement in selling compressors and couplers of the kind exemplified in Exhibit A, Beezley Affidavit 28

The only question which this writ of certiorari presents to this court concerns this belatedly trumped-up theory and contention of non-infringement in and by the Hollingshead Company's sale of compressors and couplers of this "Beezley type" 29

A picture of the Hollingshead compressor and coupler of the kind sold to Beezley 30

The Gullborg patent No. 1,307,734 in suit 31

The construction and mode of operation of the coupler of the Gullborg patent No. 1,307,734 40

The Hollingshead Company's equipment 42

The compressor sold by the Hollingshead Company to Beezley included a suction effect coupler substantially identical with those held by the Seventh Circuit Court of Appeals, and previously held by the Sixth Circuit Court of Appeals, to infringe the suction effect claims of Gullborg patent No. 1,307,734 44

It is conceded by the respondent that this coupler part of the apparatus which Hollingshead sold to Beezley is a "suction-effect" coupler substantially equivalent or identical with the "suction-effect" coupler shown in the Gullborg patent 45

The Larkin Company's coupler before the 7th C. C. A. 48

The construction and mode of operation of the couplers previously held by the Sixth Circuit Court of Appeals to infringe the "suction effect" claims of the Gullborg patent 1,307,734 50

The Larkin Company's coupler before the 6th C. C. A. 51

The Lyman Company's coupler before the 6th C. C. A. 53

The decisions of the 2nd C. C. A. and the 3rd C. C. A. covered some other matters but also involved decisions holding some or all of claims 1, 2, 3, 4, 5, 6, 8 and 10 of Gullborg patent No. 1,307,734 valid and infringed by combinations of fittings and grease guns and couplers essentially identical with those previously described 54

In scores of contested cases the District Courts have uniformly held that the sale of compressors comprising grease pumps and couplers essentially like those previously described, constituted a contributory infringement of some or all of claims 1, 2, 3, 4, 5, 6, 8 and 10 of Gullborg patent No. 1,307,734 54

In the structure of the Gullborg patent in suit, as in the case of all of the "suction-effect" compressors heretofore held by the Sixth Circuit Court of Appeals and by the Seventh Circuit Court of Appeals and by scores of District Courts to infringe the suction effect claims of the Gullborg patent No. 1,307,734, it is necessary to relieve the pressure upon the grease in order to secure the advantages of the "suction effect" 55

The construction and mode of operation of the grease pump parts of the Hollingshead compressor 63

The error urged by the petitioner lies in the Holding of the Sixth Circuit Court of Appeals that the Hollingshead Company's sales of these Beezley Exhibit A compressors did not constitute a contributory infringement of claims 1, 2, 3, 4, 5, 6, 8 and 10 of Gullborg patent 1,307,734..... 73

The argument 74

The defendant-respondent's contentions..... 80

In reply to the defendant-respondent's contentions 82

1. The testimony of the Hollingshead Company's expert witness 82

2. The answer to the respondent's representation that the compressor which Hollingshead sold to Beezley is of a character such "that the normal and any possible operation of this grease gun unit produces a pressure in the coupler part many hundred times greater than the very slight amount of vacuum or 'suction' which could possibly be produced within the coupler element, and that this much larger pressure cannot be relieved prior to disunion" 97

3. The respondent's argument that Mr. Gibson's testimony is "uncontradicted" 101

4. Relative to claims 14 and 15 of Gullborg patent 1,307,734 102

In conclusion 103

Cases Cited.

Hollingshead *v.* Bassick, 50 Fed. (2d) 592; Denied 53 Fed. (2d) 470 10
Leeds & Catlin *v.* Victor, 213 U. S. 301, 325 ..... 12, 20
Lyman *v.* Bassick and six other cases, 18 Fed. (2d) 29 ..... 15, 53
Larkin and Montgomery Ward *v.* Bassick, 19 Fed. (2d) 939, 944, 23 Fed. (2d) 92 ..... 23, 47, 48
Bassick *v.* O. K. Manufacturing Co., 18 Fed. (2d) 29 50
Bassick *v.* The Larkin Automotive Parts Co., 18 Fed. (2d) 29 51
Bassick *v.* Adams, 52 Fed. (2d) 36 54
Rogers *v.* Alemite, 74 Fed. (2d) 1019 54

SUPREME COURT OF THE UNITED STATES

OCTOBER TERM, 1935.

No. 23.

THE BASSICK MANUFACTURING COMPANY,
Plaintiff-Petitioner,

vs.

THE R. M. HOLLINGSHEAD COMPANY,
Defendant-Respondent.

BRIEF ON BEHALF OF PLAINTIFF-PETITIONER.

B.

A List of the Cases in Which Gullborg Patent No. 1,307,734, Has Been Involved With Reference to the Official Reports of the Opinions Delivered in the Courts Below, In So Far As They Have Been Reported.

This list includes all of the cases in which decrees were entered, either after a contest or by consent or by default. The final decrees in all of the contested cases held the Gullborg patent to be valid and infringed ex-

cept in the suit against Seltzer and Hurwitz of Philadelphia, in which the court held that there was not adequate proof of the alleged act of infringement.*

Petitioner was known as The Bassick Manufacturing Company until September 17, 1928, whereupon the corporate name was changed to Alemite Manufacturing Corporation. On May 13, 1929, the corporate name was changed to Alemite Corporation.

The petitioner was the plaintiff in all of the suits against the following defendants.

Defendant		Date of Decree	Reported
Adams Grease Gun Corp.	N. Y.	Dec. 21, 1931	53 Fed. (2d) 36 39 Fed. (2d) 90 26 Fed. (2d) 72
A. E. A. Mfg. Co., Inc.	N. Y.	Oct. 11, 1927	
Airshot Lubrication Co.	Ohio	Aug. 22, 1927	
Airshot Manufacturing Co.	Kan.	Sept. 19, 1932	
Alexander, H. and Hrusa, F. C.	Calif.	Mar. 10, 1930	
Aloia, Joseph	N. Y.	Jan. 5, 1929	
Alper, David	Calif.	Dec. 16, 1929	
Aluminum Screw Machine Products Co.	N. J.	Jan. 17, 1928	
American Luberite Corp.	N. Y.	June 25, 1929	
Auto Equipment Co.	Ind.	July 6, 1926	13 Fed. (2d) 463
Auto Equipment Co., Inc.	Tex.	Dec. 9, 1927	
Auto Supply Co., Inc.	Miss.	July 3, 1929	
Automotive Specialty Corp.	N. Y.	Sept. 26, 1927	
Ballou & Wright	Wash.	Feb. 23, 1928	
Barsook, Henry	Mich.	Sept. 11, 1930	
Bearing Supply Co.	Wash.	July 25, 1930	
Beckley-Ralston Co.	Ill.	Jan. 10, 1928	
Bel-Mel Corp.	Ill.	May 12, 1930	
Bercovich, J.	Calif.	Dec. 2, 1929	
Bercovich, M.	Calif.	Mar. 10, 1930	
Berkson, Mac	Ohio	Feb. 10, 1928	
Berlin, David	Mich.	Oct. 14, 1930	
Berlin, F. A.	D. C.	Jan. 23, 1928	
Biddle Purchasing Co.	N. Y.	Jan. 30, 1931	
Blain, W. P.	Ill.	July 1, 1925	
Blumenkopf, Henry	N. Y.	Feb. 4, 1930	
Borderland Auto Supply Co.	Tex.	Sept. 1, 1926	
Boston Pressed Metal Co.	Mass.	Sept. 12, 1927	
Boyer, A. J.	Mass.	Sept. 11, 1930	
Brandfield Corp.	N. Y.	Mar. 9, 1932	

* For the convenience of courts and counsel, we have had printed in five volumes all of the opinions (regardless whether officially reported) of all of the courts in all of these cases, together with the decrees of the courts. Copies of these so-called "Adjudication Books" have been furnished to counsel for the respondent herein, and several copies will be left with the Clerk of this Court at the time of the argument.

Defendant		Date of Decree	Reported
Brandmeier, August T., August T. Brandmeier Corp. and Kelwax Corp.	N. Y.	Feb. 15, 1934	
Brown, M.	N. Y.	Oct. 2, 1934	
Brown & Green Ignition Sales Co.	N. Y.	June 26, 1928	
Burns, W. E.	Ore.	Sept. 11, 1925	
Byron, S.	Ill.	Sept. 22, 1927	
California Dairies	Calif.	Feb. 18, 1929	
Carpenter, N. A.	N. Y.	Nov. 15, 1928	
Carson Equipment Co.	N. Y.	Mar. 18, 1929	
Cartman, S. J. and J. A.	Calif.	Mar. 7, 1930	
Cavanee, F. and Smith, W. D.	Kan.	Sept. 30, 1931	
Champion Hy-Pressure Mfg. Co.	N. Y.	Feb. 25, 1925	
Chanslor & Lyon Co.	Calif.	Feb. 6, 1929	
Chapman, D. L. and F. R.	Colo.	Jan. 26, 1929	
Chicago Auto Equipment Co.	Ill.	Oct. 15, 1929	
Chicago Automobile Supply House	Ill.	Oct. 15, 1929	
Clark, A. B. et al.	Calif.	Aug. 25, 1933	
Clarksberg Tire Co.	W. Va.	Apr. 12, 1932	
Coffman, W. R.	W. Va.	Apr. 12, 1932	
Cohan, George	N. Y.	Nov. 28, 1930	
Cohen, Gottlieb	N. Y.	Apr. 4, 1928	
Cohen, J. M. and M. A.	Mass.	Nov. 18, 1925	
Cohn, Morris D.	Calif.	Jan. 29, 1932	
Coliseum Battery Co.	Ill.	Oct. 15, 1929	
Commonwealth Screw Co.	Mass.	Jan. 28, 1926	
Community Motor Supply Co.	Ill.	June 16, 1927	
Continental Sales Co.	Ill.	Sept. 29, 1925	
Continental Tire Corp.	Ill.	Mar. 16, 1926	
Cook Auto Machine Co.	Ark.	Oct. 17, 1929	
Cook, J. B., Auto & Machine Co.	Tenn.	Jan. 2, 1926	
Coombs, C. B.	Ind.	Oct. 27, 1933	
Cronin Co., P. J.	Ore.	Apr. 13, 1928	
Curtice, E. S. and Clark, E. O.	Miss.		
Curtis & Christensen, Inc.	Calif.	Feb. 15, 1930	
Cussins & Fearn Co.	Ohio	Apr. 9, 1927	
C. & G. Manufacturing Co.	Ill.	Jan. 8, 1926	
Dawson, S. and Temple, R.	Ill.	Oct. 26, 1931	
Doliva, George	Mich.	Sept. 11, 1930	
Doyle, Larry	Calif.	June 10, 1931	
Drapery Hardware Mfg. Co.	N. Y.	Oct. 18, 1928	
Drolet & O'Brien Co.	Ill.	Oct. 15, 1930	
Eastern Machine Co. et al.	N. Y.	July 22, 1932	
E. G. Mfg. Co., Inc.	N. Y.	Dec. 5, 1927	
Eisenberg, B. and L.	N. J.	Dec. 16, 1931	
Fairchild, Roger	Conn.	Aug. 23, 1932	
Farnsworth, R. and Callahan, T. J.	Calif.		
Farrell Auto Supply Co., Inc.	N. Y.	Aug. 23, 1929	
Farwell, Ozmun, Kirk & Co.	Minn.	Nov. 14, 1928	
Faught, A. E. and Windmiller, H. J.	Tex.	May 18, 1927	
Feldman, L.	Ill.	Dec. 6, 1927	
Fischer, J. Waterman	Calif.	Aug. 24, 1926	
Flamm, Samuel A.	Pa.	Jan. 24, 1930	
Fly, William L.	Mo.	Nov. 19, 1925	
Franklin Auto Supply Co.	R. I.	May 18, 1928	
Froehling Mfg. Co.	Ill.	Dec. 10, 1923	
Fromm, Eric	Mich.	Sept. 30, 1930	

Defendant		Date of Decree	Reported
Gaines Motor Sales Co.	Tex.	Apr. 9, 1927	
Garelick, Jake	Mich.	Oct. 15, 1930	
Gavin Co., P. W.	Calif.	Dec. 27, 1926	
Geller, Ward & Hasner Hardware Co.	Mo.	Apr. 15, 1926	
Gibson Company, The	Ind.	July 12, 1927	
Gilbertson, Ralph E.	Minn.	July 8, 1935	
Gillette, S. H.	Calif.	Dec. 11, 1929	
Globe Sales Co. and W. S. Rea	Minn.	Nov. 28, 1932	
Glyder, Morris J.	N. Y.	Feb. 2, 1932	
Godbey, John S.	Ohio	June 25, 1928	
Gold, J. N. and Marinoff, J.	Pa.	Jan. 21, 1929	
Goldberg, S.	N. Y.	June 29, 1929	
Gould-Mersereau Co.	N. Y.	Feb. 9, 1928	
Grant-Dadey Co.	N. D.	May 25, 1927	
Gray Co., Inc.	Minn.	July 28, 1932	
Grease-Rite Pneumatic Gun Co.	Colo.	Nov. 1, 1927	
Greenberg, H. and Jacobs, B.	R. I.	Jan. 22, 1932	
Green, Howard C.	Calif.	Oct. 16, 1929	
Gresser Manufacturing Co.	Mich.	May 15, 1930	
Griswold-Sohl Co.	Ohio	Sept. 10, 1925	
Gross Hardware & Supply Co., Ph.	Wis.	Oct. 19, 1927	
Gulotta, Charles	N. Y.	May 28, 1929	
Haiden Auto Parts, Inc.	Calif.	Sept. 5, 1929	
Hamerschlag, E.	N. Y.	Feb. 18, 1935	
Harris, Max, and Engert, Hyman E.	Ill.	Jan. 10, 1934	
Harris, Roger and Coleman, L. R.	Conn.	Apr. 11, 1933	
Harris, S. and Hirsch, R.	Ill.	Oct. 8, 1930	
Hartman, John J.	Calif.	Aug. 30, 1929	
Hasford, C. B.	Tex.	Mar. 19, 1935	
Hassell, Inc., John	N. Y.	May 3, 1929	
Haynes, W. W. and Patrick, S. A.	Okla.	July 16, 1927	
Hickman, Paul W.	Pa.	Feb. 7, 1930	
Hi-Pressure Sales Co., Inc.	Calif.	May 7, 1934	33 Fed. (2d) 91
Hittelman, R.	Calif.	May 25, 1931	
Hockaday, Harlow & Phillips	Calif.	Sept. 11, 1929	
Hofer, Jacob, Inc.	N. Y.	Nov. 15, 1928	
Holliday, W. J. & Co.	Ind.	May 28, 1927	
Hollingshead Company, The R. M.	Tenn.		50 Fed. (2d) 3 53 Fed. (2d) 4 73 Fed. (2d) 5
Horst & Wilkinson Co., Inc.	Iowa	Nov. 19, 1928	
Huber, J. F. and F. S.	Calif.	Nov. 29, 1929	
Hunter, William J.	N. Y.	Nov. 29, 1926	
Hygrade Machine Products Mfg. Co., Inc.		May 27, 1929	
Ideal Auto Supply Co.	Ill.	Oct. 15, 1929	
Inter-Mountain Electric Co.	Utah	Dec. 19, 1929	
Jacobs, I. H.	Calif.	Mar. 10, 1930	
Jaffe, Harry E.	Ill.	Apr. 8, 1926	
Jawers Auto Supply Store	Pa.	July 1, 1930	
Johnston, Mose	Ohio	Nov. 11, 1927	
Jones, J. Elmer	Mo.	June 30, 1927	
Jones, V. P.	Calif.	May 6, 1931	
Jones, Wesley J.	Kan.	July 8, 1929	
Justus & Parker Co.	Ohio	Jan. 26, 1929	

Defendant		Date of Decree	Reported
Kansas City Filling Station Supply Co.	Mo.	Jan. 9, 1928	
Kantor, Max	N. Y.	Dec. 8, 1933	
Kavanaugh, A. W. et al.	Okla.	Oct. 14, 1929	
Kellogg Mfg. Co.	N. Y.	Apr. 1, 1930	
Kelly-How-Thomson Co.	Minn.	Jan. 2, 1929	
Kirk, A. L.	Calif.	Nov. 12, 1934	
Kirkpatrick, D. B.	Calif.	Apr. 3, 1931	
Klein, Dan	N. Y.	Apr. 9, 1932	
Koehler, A. G. and Koehler, E. T.	Conn.	Oct. 17, 1927	
Kohorn, S. N. and Gup, M.	Ala.	Dec. 8, 1925	
Kouchel, George	N. Y.	Jan. 5, 1929	
Kragen, M.	Calif.	Mar. 24, 1930	
Kramer, M. S.	N. Y.	Nov. 20, 1928	
Kraus, Joseph	Calif.	Sept. 11, 1929	
Kretzer, L. and Seger, C.	N. Y.	July 9, 1928	
Laidhold, Nat	N. Y.	Nov. 13, 1928	
Lamb, B. W.	Kan.	Oct. 2, 1928	
LaMaskin-Berger Co.	Ill.	Nov. 7, 1934	
Larkin Automotive Parts Co.	Ohio	June 7, 1928	18 Fed. (2d) 29
Larkin Automotive Parts Co., et al.	Ill.	June 1, 1928	19 Fed. (2d) 944 19 Fed. (2d) 939
Lever, E. S. and D. M.	Calif.	Mar. 10, 1930	
Leseberg, W. L.	Calif.	Dec. 16, 1929	
Leterstone Sales Co.	Ill.	Dec. 20, 1926	
Linden Auto Sales Co.	N. Y.	Feb. 4, 1930	
Livingston, S. S.	Calif.	June 15, 1931	
Lloyd, A. S.	Calif.	Dec. 2, 1929	
Lovering, Charles E.	Ohio	June 8, 1925	
Lowe Motor Supplies Co.	N. Y.	Apr. 16, 1927	
Lyman Manufacturing Co.	Ohio	Mar. 18, 1927	18 Fed. (2d) 29
Lyons, J. S.	Okla.	Apr. 9, 1925	
McCauley, C. et al.	Tex.	Mar. 17, 1928	
McCracken, L. S.	Okla.	Oct. 9, 1929	
Maher, Richard D.	Mich.	Mar. 12, 1928	
Malisoff, Fanny	Calif.	Nov. 29, 1929	
Mandel, Conrad	Ill.	Sept. 22, 1927	
Manhattan Mirror Works	N. Y.	Feb. 19, 1930	
Marcus, Henry	Ill.	Sept. 6, 1924	
Marshall-Wells Co.	Minn.	Jan. 2, 1929	
Martin, James	N. Y.	Feb. 23, 1928	
Matras & Sons, Inc.	Wis.	Oct. 14, 1927	
May Screw Products Co.	Mich.	Jan. 8, 1932	
Mee-Oakes Co.	Okla.	Jan. 4, 1926	
Midwest Machinery Products Co.	Ill.	May 6, 1925	
Miller Company	Tex.	Mar. 17, 1928	
Miller, Otto A.	Ohio	May 13, 1926	
Miller's Brass Fitting Co., Inc.	N. Y.	July 3, 1928	
Mills Morris Co.	Tenn.	Apr. 27, 1928	
Min-a Max Company	Minn.	Oct. 29, 1934	
Minthorn, L. L.	N. Y.	Sept. 12, 1928	
Moore-Handley Hardware Co.	Ala.	Dec. 16, 1927	
Moore Hardware & Iron Co.	Colo.	Apr. 9, 1929	
Moore, John M.	Okla	June 11, 1927	
Moore, L. L. and Wood, J. Carlisle	Tex.	Nov. 2, 1932	
Morgan, G. B. et al.	Tex.	June 28, 1932	
Morgan Manufacturing Co., Inc.	Del.	Sept. 5, 1928	
Morris, M. E.	Calif.	Mar. 10, 1930	

Defendant		Date of Decree	Reported
Morris, Vernon	Calif.	Dec. 20, 1929	
Morrison's, Inc.	Utah	Aug. 31, 1929	
Motive Parts Co. of America	Ill.	Dec. 27, 1928	
Motor Equipment Co.	Kan.	Mar. 15, 1928	
Motor Parts Co.	Pa.	Jan. 24, 1930	
Motor Parts Depot, Inc.	Tex.	June 4, 1926	
Muller, W. J. and F. B.	Calif.	Dec. 13, 1929	
Munoz, Alfred	N. Y.	Nov. 15, 1928	
Nath, Louis	N. Y.	Nov. 17, 1934	
National Acme Co.	Ohio	June 30, 1925	
National Auto Electric Co.	N. Y.	Nov. 13, 1928	
National Lubricator Corp.	N. Y.	June 18, 1929	
National Service Co.	D. C.	May 13, 1926	
New Britain Machine Co.	Conn.	Sept. 10, 1927	
New England Mills Co.	Ill.	Mar. 16, 1926	
Nichoalds Co.	Mich.	Feb. 25, 1927	
Nichols, Dean & Gregg	Minn.	Nov. 14, 1928	
Nielsen, Walter	Calif.	Mar. 10, 1932	
Norris, John E.	Mich.	Feb. 6, 1928	
Nurkiewicz, Ignatius	N. Y.	Jan. 5, 1929	
Nusbaum Motor Supply Co.	Mich.	Dec. 30, 1929	
O. K. Manufacturing Co. et al.	Ohio	Dec. 13, 1927	18 Fed. (2d) 2
Olson, Fred L.	Kan.	Dec. 6, 1926	
Orgill Bros. & Co., Inc.	Tenn.	Jan. 5, 1931	
Orr Iron Co.	Ind.	Oct. 10, 1927	
Pacific Lubrication Engineering Co.	Calif.	Mar. 14, 1932	
Paco Accessories, Inc.	Ohio	Apr. 29, 1932	
Paine, Kenneth, and Houde, A.	Mass.	Jan. 24, 1932	
Parts Engineering Co.	Pa.	Feb. 20, 1928	
Paysen, Andrew	Iowa	Nov. 2, 1926	
Pearlman, William	Ill.	June 16, 1927	
Peck Spring Co.	Conn.	Dec. 12, 1927	
Peerless Automatic Machine Co.	Ohio	Sept. 27,1928	18 Fed. (2d) 29
Pep Auto Supply Co.	Pa.	Nov. 16, 1928	
Peterson, B. W.	Conn.	Nov. 26, 1929	
Phillips, V. O.	N. Y.	May 23, 1935	
Phipps, F. H. and Duffey, A. F.	Tex.	May 24, 1929	
Pittsburgh Parts Mfg. Co.	Pa.	Sept. 23, 1927	
Pittsburgh Tire Sales Co.	N. Y.	Dec. 12, 1927	
Plant Co.	Minn.		
Poncher, Louis	Ill.	June 16, 1927	
Porte Mfg. Co.	N. Y.	June 26, 1926	
Post & Lester Co.	Conn.	Nov. 8, 1927	
Pruden Hardware Co., W. E.	N. Y.	Apr. 26, 1927	
Quaker Auto Supply Stores	Pa.	Dec. 7, 1928	
Ramsey Motor Service, Inc.	Minn	Nov. 14, 1928	
Ready Auto Supply Co.	N. Y.	Dec. 30, 1927	22 Fed. (2d) 331
Rex Metal Mfg. Co.	Pa.	Oct. 10, 1934	
Rhode Island Machine & Tool Co.	R. I.	July 9, 1921	
Rieth, Harvey L.	Ohio	June 8, 1925	
Riggs Tire & Supply Co.	Ohio	June 18, 1927	18 Fed. (2d) 29
Riley, P. J.	Ohio	Nov. 16, 1928	
Robertson, William & Sons	Ill.	Apr. 15, 1930	
Robey, H. C. and B. T.	Wash.	June 17, 1926	
Rockmore, N. and Gross, L.	N. Y.	Jan. 3, 1930	
Rogers, G. S. and Dusenberry, R. W.	Pa.	Jan. 19, 1934	74 Fed. (2d) 101 5 Fed. Supp. 940
Roth & Schlenger, Inc.	N. J.	Dec. 16, 1931	

Defendant		Date of Decree	Reported
Samuel, I. and B. and J.	Pa.	Feb. 7, 1930	
Saslove, A. and Fisher, S.	Mich.	Jan. 15, 1931	
Sayer, R. S., Jr.	Pa.	Jan. 21, 1930	
Scheffer & Rossum Co.	Minn.	Nov. 14, 1928	
Schlegel, N.	Calif.	Sept. 11, 1929	
Schneer, Emil	N. Y.	Nov. 14, 1928	
Schwartz, D. et al.	N. Y.	Nov. 20, 1928	
Scott, John P.	D. C.	Feb. 8, 1926	
Scott, Carl L.	Calif.	Feb. 5, 1930	
Scovill Mfg. Co.	Conn.	Aug. 14, 1925	
Seedman Automotive & Radio Co. Inc.	N. Y.	Oct. 26, 1929	
Seigel, David	Iowa	Apr. 28, 1924	
Self, J. M.	Pa.	Apr. 9, 1925	
Seltzer & Harwitz	Pa.	June 22, 1930	
Shadbolt & Boyd Co.	Wis.	Oct. 21, 1927	
Shawnee Motor Supply Co.	Okla.	Mar. 24, 1927	
Sheridan Auto Supply Co.	Ill.	Oct. 15, 1929	
Sickler, C. F. and Gebhart, G.	Calif.	Feb. 9, 1933	
Siefert, Charles et al.	Ohio	Apr. 11, 1932	
Simmons Mfg. Co.	Ohio	Dec. 5, 1927	
Simon, D. and Feuer, M.	N. Y.	Apr. 23, 1930	
Smith, Barney, and Smallwood, Fred	Tex.	Jan. 15, 1934	
Smith, R. L.	Calif.		
Snow, William and R. H.	Wash.	Oct. 1, 1928	
Sol's Auto Supply	Calif.	Jan. 5, 1932	
Sommer, Herman C.	Calif.	June 7, 1932	
Southern Motor Supply Co.	Okla.	Apr. 9, 1925	
Southwestern Mfg. Co.	Texas	Mar. 18, 1935	
Specialty Sales & Service, Inc.	Minn.	Dec. 26, 1931	
Specialty Sales & Service Corp. et al.	Minn.	Aug. 7, 1935	
Sper, Norman L.	N. Y.	Nov. 21, 1929	
Staff, John	N. Y.	Aug. 6, 1926	
Staff, Joseph	N. Y.	May 21, 1931	
Stage, C. C. and Miller, J. L.	Neb.	Oct. 2, 1931	
Standard Products Mfg. Co.	Del.	Jan. 9, 1926	19 Fed. (2d) 937
Stetson, John P.	N. Y.	Oct. 18, 1928	
Stone-Frank Co.	Tex.	Jan. 28, 1928	
Tacoma Auto Supply Co., Inc.	Wash.	Apr. 24, 1933	
Taubman Automotive Co.	Md.	Mar. 15, 1927	
Tharp Machine Products Co.	Ill.	Oct. 15, 1929	
Triangle Automotive Parts Co.	Wash.	Oct. 16, 1933	
United Grease Gun Corp.	N. Y.	Sept. 6, 1929	40 Fed. (2d) 549
United States Auto Supply Co, Inc.	N. Y.	July 11, 1929	
United States Screw & Stamping Co.	Mass.	May 9, 1928	
Universal Automotive Supply Co.	Ill.	Oct. 15, 1929	
Up-to-Date Machine Works	Ill.	Jan. 8, 1925	
Van Horbek, W. C.	Utah	Dec. 9, 1925	
Vaughn Auto Supply Co.	Calif.	Nov. 29, 1929	
Vesuvius Corp.	Ill.	Sept. 22, 1927	
Wag's Auto Accessories	Ohio	June 18, 1927	18 Fed. (2d) 29
Wagner, Paul G.	Calif.	Nov. 17, 1931	
Wallach Bros. Co.	Ohio	Dec. 13, 1927	
Walsh Tire Co.	Ill.	Jan. 12, 1926	
Warner, Benjamin	Ill.	Feb. 12, 1923	
Warner Hardware Co.	Minn.	May 7, 1926	

Defendant		Date of Decree	Reported
Warnke, F. W.	N. Y.	Apr. 2, 1930	
Webb, A. E. and C.	Okla.	Dec., 14, 1929	
Wellworth Auto Supply Co.	N. Y.	June 28, 1926	
Western Auto Supply Co.	Mo.	Mar. 23, 1926	
Whittle, William H.	Ohio	June 8, 1925	
Wildenberg, Chas.	N. Y.	July 16, 1935	
Winner, M. A. and Stone, C. C.	Ill.	Feb. 17, 1926	
Wisco Products, Inc.	Wis.	Feb. 9, 1934	
Wronker, H. A.	Ill.	June 16, 1927	
W. S. Auto Supply Co., Inc.	Tex.	Apr. 9, 1927	
Yankee Automotive Trading Co.	N. Y.	Oct. 2, 1934	
Yant, D. L. et al.	Calif.	Jan. 30, 1933	
Yeamans, W. H.	Calif.	Oct. 8, 1934	
Yellow Cab Co.	Calif.	Dec. 13, 1929	
Zimmerlin, J. and A. P. and L.	Calif.	Dec. 2, 1929	
Zumpano, Edward	N. Y.	Nov. 5, 1930	

C.

A Concise Statement of the Grounds on Which the Jurisdiction of this Court Was Invoked and Assumed.

This suit is before this Court upon the petition of the plaintiff, The Bassick Manufacturing Company, for a writ of certiorari to review the decision and decree of the United States Circuit Court of Appeals for the Sixth Circuit, rendered November 14, 1934 (73 Fed. (2d) 543), directing that the bill of complaint be dismissed. A petition for rehearing was denied January 14, 1935. The petition for a writ of certiorari was filed April 13, 1935.

The discretionary power of this Court to grant a writ of certiorari was invoked upon the ground that

> "The decision of the Sixth Circuit Court of Appeals sought to be reviewed is in direct conflict with the decisions of several other circuit courts of appeal relative to the Gullborg patent (and in conflict also with the previous decisions of the Sixth Circuit Court of Appeals in several other cases)."

The petition for writ of certiorari was granted by this Court on May 20, 1935.

D.

A Concise Statement of the Case.

(The Following Statement Includes Substantially the Statement of the Case As Presented in the Petition for Writ of Certiorari and Brief in Support Thereof.)

An ordinary patent infringement suit in equity was brought August 16, 1926 (Rec., p. 1) in the United States District Court for the Western District of Tennessee, Western Division, on patents to Arthur V. Gullborg No. 1,307,734, issued June 24, 1919 (Rec., p. 411), and to Oscar U. Zerk No. 1,475,980, issued December 4, 1923 (Rec., p. 418), charging an infringement thereof by the respondent, The R. M. Hollingshead Company, in the sale of certain lubricating devices, and praying an injunction and an accounting.

The Hollingshead Company, in so far as the Gullborg patent is concerned, sold two kinds of equipment known throughout a rather extensive litigation as "suction effect" and "non-suction effect" compressors and couplers. Petitioner, by its petition, brought before this Court for review so much of the decree of the Circuit Court of Appeals for the Sixth Circuit as held the sale by the Hollingshead Company of "suction effect" couplers and their associated compressors not to be an infringement of the claims of the Gullborg patent.

The case was tried at final hearing in the District Court and a "decree" was entered on May 25, 1928 (Rec., p. 533). The Hollingshead Company took an

appeal* from that decree but the appeal was dismissed by the Sixth Circuit Court of Appeals as being from an order confirming a special master's report upon collateral issues, and making permanent a preliminary injunction but without determination of the fundamental issues of validity and infringement and, therefore, non-appealable (*Hollingshead* v. *Bassick*, 50 Fed. (2d) 592; petition for rehearing denied 53 Fed. (2d) 470). The cause was then submitted to the District Court upon the record made prior to the first attempted appeal. This resulted in a second decree holding that the sale of compressors and couplers of the type exemplified in Exhibit A filed with the affidavit of Beezley (suction effect) and Exhibit A filed with the affidavit of Cumming (non-suction effect) constituted infringement of claims 1, 2, 3, 4, 5, 6, 8, 10, 14 and 15 of Gullborg patent No. 1,307,734.

The opinion of the Sixth Circuit Court of Appeals reversing the decree of the District Court is reported at 73 Fed. (2d) 543. The order denying the petition for rehearing entered on January 14, 1935, is not reported, but appears in the record at p. 617.

The decision of the Sixth Circuit Court of Appeals sought to be reviewed is in direct conflict with the decisions of several other circuit courts of appeal relative to the Gullborg patent (and in conflict also with the previous decisions of the Sixth Circuit Court of Appeals in several other cases).

---

* Mr. Chief Justice Hughes appeared on the brief as one of the counsel for The R. M. Hollingshead Co. in connection with this first appeal to the Sixth Circuit Court of Appeals. His appointment to the United States Supreme Court occurred prior to the oral arguments upon this appeal. This first attempted appeal by the Hollingshead Co. was dismissed by the Sixth Circuit Court of Appeals. In its first appeal the Hollingshead Company did not argue or contend that its suction effect couplers were not sold in contributory infringement of claims 1, 2, 3, 4, 5, 6, 8, 10, 14 and 15 of the Gullborg patent. It had not even assigned error on this score. In its first appeal, in which Mr. Justice Hughes appeared as counsel, the sole contention was that certain non-suction effect couplers did not infringe claims 14 and 15 of the Gullborg patent.

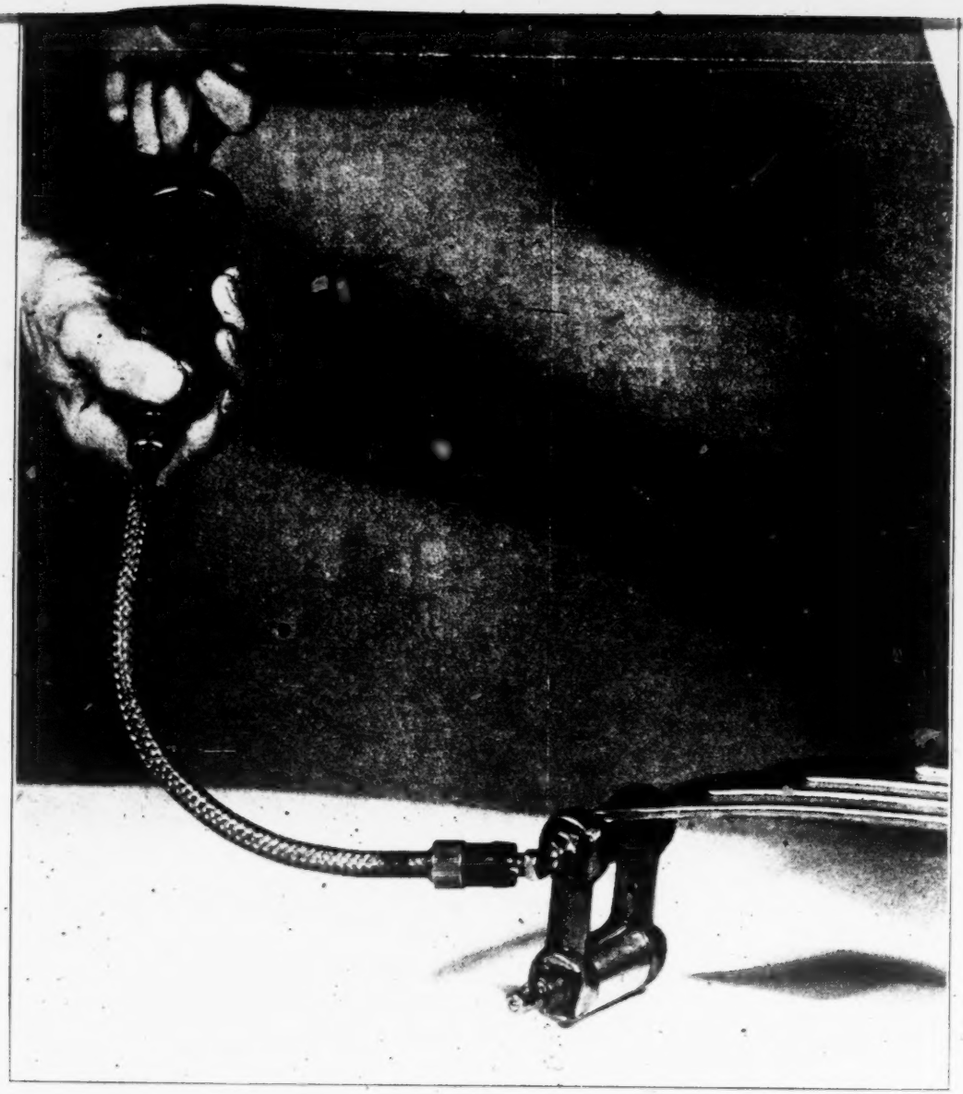

FIG. B.

This is a photograph of the Exhibit "Alemite" lubricating equipment as manufactured and sold by the plaintiff under the Gullborg patent in suit. Each bearing is equipped permanently with a "pin fitting" (i. e., a tubular member having its outer end flanged inwardly to provide a seat for a ball check valve. This tubular member is screwed into the hole leading to the bearing to be lubricated. It has a cross-pin extending diametrically across and through the bore of the tubular member, and projecting from both sides thereof. There is a ball check valve at the inlet end of the pin fitting. It is held to its seat by a small coiled spring which rests upon the cross-pin). The barrel of the grease compressor or "grease gun" is filled with grease. A screw-threaded piston rod is rotated to advance the piston within the barrel of this compressor, whereupon grease is forced through the conduit to a coupler. The coupler can be quickly attached to any pin fitting whereby grease may be forced under high pressure from the barrel of the grease gun into the interstices of the bearing to be lubricated. After the requisite grease has been forced into one bearing and the pressure is relieved, the coupler is detached from the first pin fitting and attached to a second pin fitting associated with a second bearing, whereupon the greasing operation is repeated.

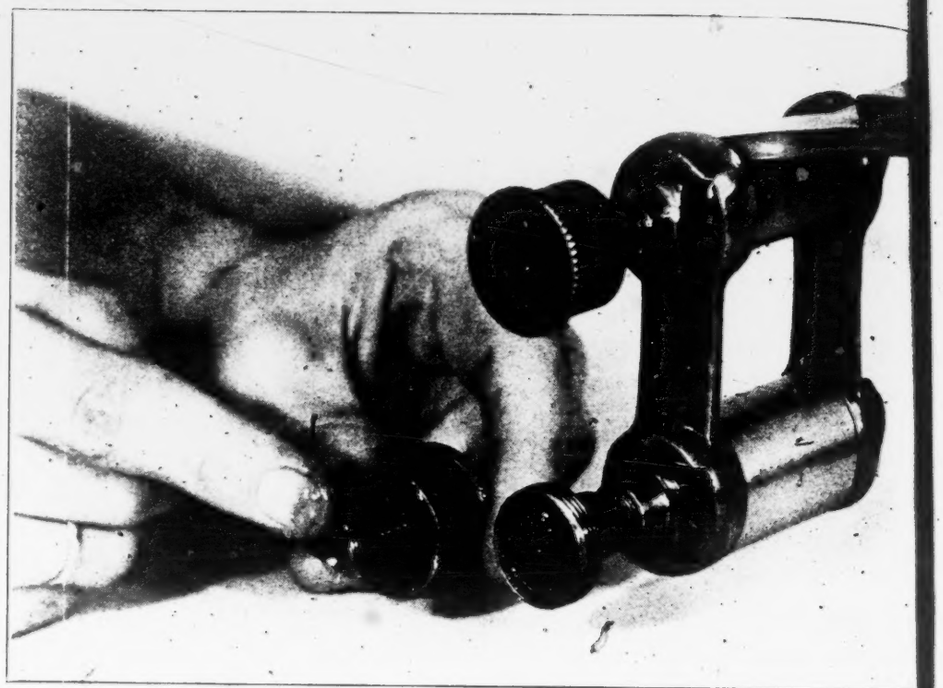

FIG. A.

This photograph of Plaintiff's Exhibit 1 shows the spring shackle bolts equipped with old-fashioned grease cups of the kind universally used prior to the advent of the Gullborg invention in 1917. The threaded stud was screwed into the end of a hole leading to the bearing to be lubricated. An internally screw-threaded cup was filled with grease scooped out of a pail on the end of a stick or knife, or more frequently by a man's finger. This cup was then screwed over the externally threaded end of the stud, thereby squeezing the grease through the hole into the bearing (and squeezing a good deal of it out through the loose threaded engagement between the stud and the cup). As the bearing ran dry the cup was from time to time screwed farther over the end of the stud, thereby squeezing more grease into the bearing. When all of the grease in the cup had been squeezed into the bearing, the cup was unscrewed from the exposed end of the stud and refilled with new grease.

The use of these old-fashioned grease and oil cups was almost completely displaced by the lubricating system of the Gullborg patent in suit.

Prior to the advent of the Gullborg lubricating system in 1917 (Exhibits A and B, page 127), the universal practice was to lubricate the chassis bearings of automobiles and the similar bearings of other machines by the use of oil cups or grease cups of the kind illustrated in the accompanying photograph, Figure A, of Plaintiff's Exhibit 1, Rec., p. 48.

Claims 1, 2, 3, 4, 5, 6, 8 and 10 of the Gullborg patent No. 1,307,734 (Rec., p. 411) describe a lubricating system for automobiles or other machines, in which a "pin fitting" is permanently screwed into a hole leading to the bearing to be lubricated. Each bearing is permanently equipped with one pin fitting. See Fig. B. A grease gun or compressor can, by means of Gullborg's coupler, be quickly attached to and detached from each of the several pin fittings in succession. The gun or compressor is first filled with grease. When, therefore, it is attached to one of the pin fittings by means of the coupler, its piston can be operated in such a way as to force grease under high pressure through the coupler and the pin fitting, into the bearing to be lubricated. Upon discontinuing the pressure in the grease gun by arresting the forward movement of the piston or by retracting the piston of the compressor, the associated coupler may be detached from the one pin fitting and subsequently attached to another pin fitting.

It was the construction and mode of operation of the coupler and the pin fittings, in combination with the grease gun, which constituted Gullborg's invention and led to the commercial adoption of Gullborg's lubricating system to an extent such as to have displaced, almost completely, every other known means for the lubrication of the chassis bearings of automobiles. (Rec., p. 123.) The plaintiff, The Bassick Manufacturing

Company (and its successors, Alemite Corporation and Stewart-Warner Corporation), has sold more than five hundred million of the pin fittings and tens of millions of compressors and couplers for use in combination therewith. (Rec., p. 125.)

The complete combination of the patent cannot be assembled by the manufacturer. It is only the ultimate user who does that,—because it is only the ultimate user who has occasion to couple the compressor to a pin fitting. In this respect the Gullborg patent is like that of the Berliner patent involved in the case of *Leeds & Catlin* v. *Victor*, 213 U. S. 301, 325, where the claimed combination involved the disc record, tone arm, and stylus of a phonograph. It was only the ultimate user who brought together or "combined" the tone arm and stylus with the disc record.

The various parts of the Gullborg lubricating system are of a character which can be manufactured with standard machinery of inexpensive type. This fact, coupled with the enormous demand for the Gullborg equipment, have led hundreds of concerns to engage in the manufacture and sale of some or all of the parts of the Gullborg equipment in infringement of the patent in suit.

Some of the many infringers of the Gullborg patent have sold the pin fitting parts only; others have sold the compressor and coupler parts only.

Almost all of the many suits for infringement of the Gullborg patent have therefore involved mainly questions of contributory infringement.

In the present case the Hollingshead Co. sold only the compressor and coupler parts of the complete combination. It did so with the expectation and intention that the purchaser would combine them with the pin

fitting parts manufactured and sold by the plaintiff or by others.

This brief explanation of the invention of the Gullborg patent will enable us to state concisely and exactly the conflict between the decision of the Sixth Circuit Court of Appeals in this Hollingshead case and the decisions of other courts of appeal in other cases, and, indeed, to state the conflict between the decision of the Sixth Circuit Court of Appeals in the Hollingshead case and the previous decisions of the same Sixth Circuit Court of Appeals in seven other cases. In stating this conflict we shall quote exactly the statement appearing on pages 5 to 8, inclusive, of our petition for a writ of certiorari.

> "In the case of *Larkin* v. *Bassick*, 19 Fed. (2d) 944, the Court of Appeals for the Seventh Circuit held that the Larkin Company's sale of certain couplers, together with their associated compressors, for intended use in combination with the plaintiff's 'Alemite' pin fittings, was a contributory infringement of claims 1, 2 and 6 of the Gullborg patent in suit. In its decision rendered November 14, 1934 (73 Fed. (2d) 543), in the present case, the Sixth Circuit Court of Appeals held that the Hollingshead Company's sale of the same identical couplers (together with their associated compressors) for intended use in combination with the plaintiff's 'Alemite' pin fittings, was not a contributory infringement of these same claims 1, 2 and 6 of the Gullborg patent.
>
> "The *complete* identity of the couplers sold by the Hollingshead Co. in the one case with those sold by the Larkin Company in the other case, was due doubtless to the fact that the couplers sold by Hollingshead were manufactured for Hollingshead by Larkin prior to the time that Larkin had been enjoined against the further sale of these couplers. This common source of these identically similar

couplers as sold by the two companies, is alluded to in the opinion by Judge Denison of the Sixth Circuit Court of Appeals, 50 Fed. (2d) 592 (rehearing denied 53 Fed. (2d) 470), wherein the first attempted appeal of the Hollingshead Company was dismissed. In this opinion Judge Denison said:

> "'In *Lyman Mfg. Co.* v. *Bassick Mfg. Co.*, 18 F. (2d) 29, we held the Gullborg patent No. 1,307,734 valid as to certain claims and contributorily infringed by Larkin through the sale of his compressor or grease gun for the purpose of being used in connection with plaintiff's pin fittings to make up the combination described in these claims. . . . The Hollingshead Company, through a subsidiary at Memphis, had been purchasing and selling these Larkin devices, thus held to infringe these two patents. On account of such sales, the Bassick Company brought, in the court below, this suit complaining of the infringement of these two patents. Upon due application a preliminary injunction issued, which was expressly directed against the further sale of these Larkin devices.'
>
> "The record in the present (Hollingshead) case does not show that the Hollingshead Co. purchased its couplers (and the associated compressors) from the Larkin Co. It does, however, show the exact and complete identity of the couplers sold by Hollingshead with those sold by Larkin. The Larkin Company's sales of these couplers were held by the Seventh Circuit Court of Appeals to be a contributory infringement. The Hollingshead Company's sales of identically the same couplers were held by the Sixth Circuit Court of Appeals not to be a contributory infringement.[2]

---

[2] Some of the guns or compressors in association with which the Hollingshead Co. sold its couplers, differed in immaterial respects from the compressors sold by Larkin prior to the commencement of the litigation against Larkin. Larkin was, however, compelled to discontinue the manufacture and sale of all of these slightly variant forms of compressors under the prior decision of the Sixth Circuit Court of Appeals, 18 Fed. (2d) 29,

"This latest decision of the Sixth Circuit Court of Appeals in this case of *Hollingshead* v. *Bassick* is not only in conflict with the decision of the Seventh Circuit Court of Appeals in *Larkin* v. *Bassick*, 19 Fed. (2d) 944, but also in conflict with the decisions of several other United States Circuit Courts of Appeal, but is indeed in conflict with the prior decision of the Sixth Circuit Court of Appeals in *Lyman* v. *Bassick* and six other cases reported in 18 Fed. (2d) 29.

"The conflict with the decision of the Seventh Circuit Court of Appeals can be most concisely stated, because the defendant's allegedly infringing coupler in the Larkin case (19 Fed. (2d) 944, C. C. A. 7) was identical with the defendant's allegedly infringing coupler in this Hollingshead case. In the other cases the defendants' couplers differed in some details from the Hollingshead Co's. couplers. In construction and in mode of operation these other couplers embodied all of the essential features of the coupler of the Gullborg patent. It is impossible to reconcile the holding that the Hollingshead Co's. coupler did not infringe with the holdings in the other case that the defendants' couplers did infringe. Indeed, it is impossible to reconcile the present holding of the Sixth Circuit Court of Appeals, that the Hollingshead Co's. coupler did not

---

and under the decision of the Seventh Circuit Court of Appeals in 19 Fed. (2d) 944.

The details of the compressor are, however, of no consequence since the claims of the Gullborg patent describe the compressor part of the combination in such broad, general terms as "a pump" (claims 1, 2, 3, 4, 5 and 6), or "means for supplying lubricant to said conduit comprising a receptacle provided with a discharge outlet" (claims 8 and 10).

The opinion of the Sixth Circuit Court of Appeals in Lyman vs. Bassick and six other cases, 18 Fed. (2d) 29, devotes itself in detail to the Gullborg coupler, and in a footnote on page 35 disposes of the compressor part of the combination by saying merely:

> "Of course, in order to allow this vacuum and suction to develop, any heavy pressure on the grease must be stopped, either by the check valves used in some forms, or by the release of the plunger pressure, or both, and, if there is any failure in this relief, the grease, perhaps after momentary retraction, will continue to exude."

The Hollingshead Co.'s couplers were sold with compressors having these check valves or means for releasing the plunger pressure, or both.

infringe, with the same Court's holding in *Lyman* v. *Bassick* and six other cases (including Larkin) that the defendants' couplers did infringe. The present decision of the Sixth Circuit Court of Appeals is, therefore, in direct conflict with the following decisions:

Larkin v. *Bassick* (C. C. A. 7), 19 Fed. (2d) 944.

Bassick v. *Adams* (C. C. A. 2), 52 Fed. (2d) 36.

Lyman v. *Bassick* and six other cases (C. C. A. 6), 18 Fed. (2d) 29.

Rogers v. *Alemite* (C. C. A. 3), 74 Fed. (2d) 1019.[3]"

It was upon the basis of the facts hereinabove outlined that the Bassick Company's petition for a writ of certiorari was applied for and granted.

Petitioner's Business Under the Gullborg Patent in Suit.

Mr. Gullborg and his father began the sale of lubricating equipment substantially identical with that shown in the Gullborg patent in suit in 1917, the business being conducted under the name of Alemite Die Casting & Manufacturing Company. (Exhibit 3A, page 20.) The patent and such business as Mr. Gullborg had developed up to that time were acquired by the petitioner in 1919. (Exhibit 3A, p. 122.)

In 1919, petitioner began the manufacture and sale of "Alemite" lubricating equipment under the protection of the Gullborg patent in suit No. 1,307,734. That

[3] This present decision of the 6th C. C. A. is in conflict also with the decisions of many district courts under the same Gullborg patent. The invention of the Gullborg patent so completely replaced every other known means of lubricating the chassis bearings of automobiles and other machines that there has been a very great temptation to infringe it. The plaintiff's contentions relative to the infringement of the Gullborg patent have been fully sustained in all of the suits previously listed in this brief.

business has continued down to the present time. This lubricating equipment comprises "pin fittings" which are screwed or attached to the bearings of automobile and other machinery, and compressors and couplers for use in conjunction with the fittings for introducing the lubricant into the bearings. Specimens of the equipment are in evidence as Plaintiff's Exhibit B, Otis testimony—assortment of Alemite pin fittings, and Exhibit A, Otis testimony—small hand type compressor, hose and coupler. Petitioner manufactured and sold a full line of pin fittings for various types of bearings and a large line of compressor outfits as illustrated in Plaintiff's Catalog, Exhibit E, Otis Testimony.

Each Alemite pin fitting is exactly like every other Alemite pin fitting in so far as the receiving or connecting end is concerned. The fittings differ only in the end which is attached to the bearing, that is, they have different sizes and kinds of threads or securing means. Each compressor outfit, whether small or large, terminates in an Alemite coupler and is adapted to receive an Alemite pin fitting and to make a quickly attachable and detachable leak-proof and otherwise satisfactory connection therewith.

No two pieces of machinery have exactly the same number of bearings, located in exactly the same way. What the purchaser desires, therefore, is to buy a combination comprising a compressor of appropriate size or type, and an assortment of fittings adapted to fit the requirements of his particular machine, and a coupler by means of which the compressor may be successively connected with each of the several pin fittings.

In consonance with these requirements of purchasers, the Bassick Company, after first attempting to market the Alemite equipment in predetermined

"sets," adopted the policy of separately listing and pricing all of the component parts of the complete combination, thereby allowing each purchaser to procure the assortment best adapted to his needs.

A predetermined "set" such as it was first attempted to market comprised, for example, 32 Alemite "straight" fittings with 1/8" pipe thread to be screwed into a 1/8" pipe threaded hole leading to a bearing; 16 "90° elbow" fittings with 1/8" pipe thread; 8 "45° elbow" fittings with 1/8" pipe thread; 2 "extra long straight" fittings with 1/8" pipe thread; 1 "straight" fitting with 1/4" pipe thread; and 1 "22½° elbow" fitting with 1/4" pipe thread and bronze check valve for water pump lubrication; together with one gun or compressor terminating in one coupler which could be successively attached to and detached from each of the several fittings. This "set" was adapted to supply all of the chassis bearings of, say, a "Pierce-Arrow" large size, 1918 Model automobile.

This "set" or assortment was not, however, appropriate for the chassis bearings of any other make of automobile, nor indeed for any other Pierce-Arrow model.

The result of this effort to sell the Alemite lubricating equipment in sets appropriate to the requirements of each of the various makes and models of automobiles meant that every dealer must carry an enormous stock of complete sets. Furthermore, a farmer who acquired a set of Alemite lubricating equipment for his automobile soon found that he would like to increase his "repertory" in such a way as to enable him to use the same compressor and coupler in greasing his mowing machine. He wished, therefore, to buy nine additional pin fittings, without, however, being required to buy an additional compressor and coupler.

In order to eliminate the need of carrying large and slow-moving stocks of Alemite equipment which dealers would otherwise be required to carry, and to meet the desires and needs of the millions of people who wished to make use of the Alemite lubricating equipment on automobiles and other machinery of innumerable kinds, the Bassick Company soon adopted the policy of separately listing and pricing all of the component parts of the complete combination. This enabled dealers to put in stock a few compressors and couplers, together with, say, 1000 "straight," 500 "90° elbow" and 200 "45° elbow" pin fittings. It enabled any user of the Alemite system easily and cheaply to increase his repertory to include not only his automobile but his mower and his windmill and his churn. Under this method of stocking and selling the Alemite lubricating equipment, each purchaser was enabled to procure the assortment best adapted to his needs.

Although the Alemite lubricating system of the Gullborg patent enabled the owner of an automobile to grease his car much more easily and quickly than he had ever been able to do so before, and without covering himself with grease and grime, many automobile owners preferred to have the work of greasing done in a public garage. Garagemen, therefore, bought the compressor and coupler parts of the combination for use in conjunction with the pin fittings installed in the bearings of their customers' automobiles.

Garagemen found that the rapidity and facility with which they could grease "Alemite" equipped automobiles enabled them to do this work at a profit. Owners of fleets of automobiles found that one night worker could use one compressor and coupler in greasing all of the cars in his fleet. A demand was therefore created for larger and more powerful compressors and for

compressors operated by pneumatic or electric power rather than by hand power. The Bassick Company therefore manufactured such larger compressors terminating, however, in couplers identical with those of the smaller compressors, and sold them to garages, service stations, fleet owners, etc. (Rec., p. 135). The result was that within a few years any owner of an automobile could leave his compressor and coupler in the tool box of his car and drive into any garage or service station to have the garageman's compressor and coupler, combined with his own pin fittings, to inject grease into the bearings of his automobile.

Complete assortments of pin fititngs, compressors and couplers were sold to automobile manufacturers for the equipment of new automobiles. Complete assortments were sold to individual car owners to be used in substitution for the old-fashioned grease cups with which their cars were originally equipped. Extra pin fittings were sold to people who already had acquired one compressor and coupler. Extra compressors and couplers were sold to other people who wished to grease cars equipped with "Alemite" pin fittings.

This method of selling is rather unusual. The only close parallel is that of the phonograph. The Victor Talking Machine Company sold the Victor phonograph under the Berliner patent No. 534,543, involved in *Leeds & Catlin* v. *Victor*, 213 U. S. 301, and 213 U. S. 325. The Berliner patent covered the combination of the turn-table, stylus, tone arm, etc., and the disc record. Anyone could buy a phonograph machine in any one of a dozen sizes and styles and then select the disc records which struck his fancy. One purchaser would buy a small portable Victrola Style 23-A and fifteen Jazz band records. Someone else would buy the console style Victrola No. 141-C, together with twenty-five

Grand Opera records. The phonograph machines and the records were separately listed and priced, just as are the component parts of the Alemite equipment. In both cases the purchaser desires and enjoys the advantage of making up a selection to suit his particular needs.

No high pressure lubricating equipment comparable to the patented equipment had ever been manufactured or sold prior to the advent of petitioner's product on the market (Rec., p. 136).

Prior to the advent of Gullborg's invention, no one had ever manufactured or sold any kind of lubricating equipment in which each of the several bearings of an automobile or other machine could be equipped with any kind of a fitting or grease cup with which one single grease gun of any kind could be successfully attached and detached to force lubricant into the several bearings.*

The Hollingshead Company's Business.

The Hollingshead Company has always been engaged primarily in the sale of carriage, harness, and automobile "chemicals," *i. e.*, top dressing, soap, wax, polish, and grease (Rec., p. 260). It has never manufactured any metal parts of any kind. It has never manufactured any lubricating equipment of any kind (Rec., p. 260). It bought the compressor and coupler parts of its lubricating apparatus from such infringers as the

* Some of the decisions of some of the courts erroneously refer to lubricating systems of this general character as having been "in use" prior to Gullborg's invention. There are some prior patents and publications which proposed the use of one single compressor for attachment to any one of several bearings through coupling mechanism of one kind or another. Not one of these proposed schemes ever went into any commercial use whatsoever, either before or since the advent of Gullborg's invention. (Rec., p. 136).

Larkin Automotive Parts Company and then sold them on such a "free gift" or other basis as would promote the Hollingshead Company's sales of its Whiz grease (Rec., p. 327).*

The only identification on behalf of the Hollingshead Company of any of the lubricating apparatus sold or proposed to be sold by it was by Roderick W. Smith,

---

* The Bassick Company's "Adjudication Books," Exhibit No, 10 herein, contain orders and decrees enjoining hundreds of defendants against the further sale of spurious or so-called "gyp" Alemite and Alemite-Zerk fittings under the patents in suit. Counsel for the appellant assert in their briefs that the Hollingshead Company has never engaged in the sale of these "gyp" fitting parts of the complete combination, either as manufactured by the Larkin Company, or by any of the "blind-pig" counterfeiters. The manner in which the Hollingshead Company handled this phase of the business is reflected by the testimony of Mr. Beezley, relative to his negotiations for the purchase from the Hollingshead Company of one of the infringing compressors. His uncontradicted account of the conversation between himself and the Hollingshead Company's agent, Whittaker, is as follows:

"On the second day of April, 1926, a representative of The R. M. Hollingshead Company called on me for the purpose of selling me a service compressor, this being in response to a request made by me over the telephone. When the representative, Mr. Whittaker, arrived, the following conversation took place:

"Beezley: 'I have a number of customers whose cars are equipped with Alemite and Zerk lubricating system and I want to get a Service Compressor that I can use to grease these cars.'

"Whittaker: 'I have just what you want—I have a gun in all respects superior to the Alemite gun and which will fit Alemite and Zerk fittings for about one-half the cost of the Alemite gun. I will send out a gun and a man to demonstrate it to you.'

"Beezley: 'I also want to buy some fittings, but I cannot compete with the Alemite people, for I cannot pay the price they ask for the Alemite fittings.'

"Whittaker: 'We do not handle the fittings, **but we have a representative, Mr. R. J. Martinetti who is connected with a company that handles these fittings.** I will have him call on you and sell you some.'

"Mr. Whittaker sent me one of the Service Compressors on April 7, 1926, and also rendered me an invoice for $63.50.

"I file herewith the Service Compressor as Exhibit A; duplicate of the original order as Exhibit B; original invoice as Exhibit C; and a copy of the delivery ticket as Exhibit D.

"Several days after receiving the Service Compressor I called up the R. M. Hollingshead Company and requested that they send the representative who could sell me the pin fittings. He replied that he would and later in the day came by and told me **they were temporarily out but that in the next few days another representative of the Company, Mr. Martinetti, would find out where he could get some for me. He told me that Martinetti had a line on a place where he could get these fittings and could furnish them to me. He also said Martinetti had been selling them heretofore.**"

one of the Hollingshead Company's salesmen of soap, top dressing, grease, etc. We do not believe that Smith or any one else in the Hollingshead organization knew or cared very much about the details of the construction and mode of operation of the compressors and couplers which they purchased from Larkin and which they used in promoting their sales of Hollingshead grease. Just prior to the commencement of this suit against Hollingshead, and for two or three years thereafter, the Larkin Automotive Parts Company was dodging from pillar to post with one construction after another, after another, in an effort to escape the effect of the injunctions of the courts in the Sixth Circuit and in the Seventh Circuit, where Larkin had intervened in defense of one of its customers (*Larkin and Montgomery Ward* v. *Bassick*, 19 Fed. (2d) 939, 944, 23 Fed. (2d) 92). It is our belief that after the Hollingshead Company was preliminarily enjoined on March 21, 1927, it procured from the Larkin Company samples of whatever modified compressors and couplers the Larkin Company could devise, and by offering them in evidence in one way or another attempted to secure declaratory or other judgments which would be in conflict with the decrees and orders under which the Larkin Company was from time to time enjoined.

A Concise Statement of the Question Involved.

The sole question involved before this Court is whether the Hollingshead Company's sales of couplers and compressors of the kind sold to D. A. Beezley on April 2, 1926 (Exhibit A, Beezley Affidavit) constituted a contributory infringement of Gullborg patent No. 1,307,734, and more particularly, claims 1, 2, 3, 4, 5, 6, 8 and 10 thereof.

The Validity of the Gullborg Patent Has Been Conceded by the Respondent, Hollingshead Company.

In its appeal of June 23, 1928, from the decree of the District Court (Rec., p. 526), the Hollingshead Company assigned as error that

> "3. The Court erred in holding claims 1, 2, 3, 4, 5, 6, and 8 of Gullborg patent No. 1,307,734, valid."

This assignment of error was, however, withdrawn in and by the brief filed in the Court of Appeals on behalf of the Hollingshead Company. Counsel said in their brief in this connection:

> "ASSIGNMENTS OF ERROR.
>
> "DEFENDANT'S ASSIGNMENTS OF ERROR ON APPEAL:
>
> "Assignments numbers 3, 13, 14 and 17 are herewith withdrawn.
>
> "Numbers 13 and 17 are withdrawn because the issue therein involved is of minor importance.
>
> "Number 14 relates to defendant's plea of *res judicata,* urged at final hearing, based upon *plaintiff's allegations* of privity in a certain other suit between the instant defendant and a certain other defendant corporation in said certain other cause in the New Jersey District, in which latter cause an absolute decree of dismissal had been entered. In view of a subsequent modification of said order of dismissal in the New Jersey cause on December 23, 1929, by which said order of dismissal in the New Jersey cause now becomes without prejudice to the plaintiff, the defendant's plea of *res judicata,* forming the basis of defendant's fourteenth assignment of error, is now withdrawn.

"RECORD ON APPEAL.

"PARTS OF RECORD NOW DISCARDED BY WITHDRAWAL OF DEFENDANT'S ASSIGNMENT NUMBER 14:

"In view of the withdrawal of defendant's assignment of error number 14, a substantial part of the record relating solely to the question of *res judicata* is not now before this Court and need not be considered. For the convenience of this Court, attention is called to those parts of the printed record which need not be considered either on the appeal or on plaintiff's cross-appeal. These parts of the printed Record are:

"*Pages 90 to 129 inclusive;*—beginning with 'Amendment to Answer' on p. 90 and concluding with 'Order' on p. 129.

"*Pages 287 to 290 inclusive;*—testimony reproduced on these pages.

"*Pages 300 to 366 inclusive;*—exhibits reproduced on these pages.

"*Pages 375 to 420 inclusive;*—exhibits reproduced on these pages.

"MUCH OF REMAINING PART OF RECORD IRRELEVANT:

"Since the primary question before this Court is merely the scope of Gullborg's claims 14 and 15 and the scope of Zerk's claims 2, 3 and 5, a great deal of the record is irrelevant.

"Thus, Plaintiff's Exhibits 'J', 'K' and 'L' on pages 162 to 189 inclusive of record are reproductions of former petitions for rehearing in this Court and certiorari in the Supreme Court, in certain *Bassick* v. *Larkin and O. K. Mfg.* cases, on questions not here involved; on defenses not urged by this defendant-appellant.

"Likewise, too, Plaintiff's Exhibits 'M', 'O-3', 'O-4', 'O-6' and 'Q', on pages 191 to 195 inclusive of the record are drawings of devices enjoined by other District Courts following this Court's opinion in *Lyman* v. *Bassick, supra.*

> **"Thus, too, the Beezley affidavit and accompanying plaintiff's exhibits on pages 19 to 25 inclusive of the record and the Plaintiff's 'Exhibit A Beezley Affidavit' and Plaintiff's Exhibit No. 15, page 373 of record require no consideration because they relate solely to a defendant's device on which no appeal was taken.***
>
> "A great deal more of the record could thus be pointed out as without bearing on the questions this Court is called upon to decide, but we refrain from taking more space for this purpose, as we believe this Court will have no difficulty in separating the wheat from the chaff."

The Hollingshead Company's concession of the validity of the Gullborg patent was repeated in various ways throughout the brief of its counsel in the Court of Appeals, as, for example, on page 82, where in taking up the discussion of the other patent in suit (Zerk patent No. 1,475,980) counsel said:

> "*As in the Gullborg patent,* we start with an adjudicated patent, accept the decision of the Appellate Court, and urge the same defense, namely, non-infringement."

Precisely this same statement was made in the brief of counsel for the Hollingshead Company (p. 115) in its second appeal to the Sixth C. C. A.

This same concession of validity is implicit in the "conclusions" with which counsel for the Hollingshead Company closed their original main brief in the Court of Appeals. Thus, the concluding paragraphs of the

---

* We have set this paragraph in bold face type in order to emphasize the fact that the Hollingshead Company did not, upon its appeal to the Circuit Court of Appeals, question either the validity of claims 1, 2, 3, 4, 5, 6, 8 and 10 of the Gullborg patent, nor the Hollngshead Company's infringement of these claims by its sales of compressors and couplers like those constituting Plaintiff's "Exhibit A Beezley Affidavit." In other words, the Hollingshead Company did not even question the correctness of the contention which under the present writ of certiorari we are now making to this Court.

Hollingshead Company's brief in Appeal No. 5397 are as follows:

"CONCLUSION.

"We submit that claims 14 and 15 of the Gullborg patent should be interpreted to cover only Gullborg's *suctional* compressor in combination with the specific 'pin-fitting' recited therein (as they were interpreted in *Bassick* v. *Rogers*) and held not infringed, or they should be held invalid.

"We submit, also, that the Zerk patent is clearly not infringed because defendant is not selling the combination claimed by Zerk, is not selling either the nozzle or the lubricant receptacle of the Zerk combination, is not selling the nozzle that it does sell for adaptation to the Zerk lubricant receptacle, and is in fact only making a nozzle of the prior art adapted to be associated with a lubricant receptacle of the prior art to produce a combination of the prior art.

"Leonard L. Kalish,
Frank S. Busser,
Charles Evans Hughes,
Counsel for The R. M. Hollingshead Co.

"Burch, Minor & McKay,
Memphis, Tenn.,
Solicitors for The R. M. Hollingshead Co."

Obviously there is no contention or suggestion here that claims 1, 2, 3, 4, 5, 6, 8 and 10 of the Gullborg patent were not valid and infringed.

In Its First Appeal No. 5397, the Hollingshead Company Did Not Question the Correctness of the Decree Holding It Guilty of Infringement in Selling Compressors and Couplers of the Kind Exemplified in Exhibit A, Beezley Affidavit.

Reference to the Hollingshead Company's assignments of error (Rec., p. 526) will show that there is no assignment of error based upon the District Court's decree (Rec., p. 522) holding that the Hollingshead Company's sale of compressors and couplers of the kind sold to Beezley (Exhibit A, Beezley Affidavit) was a contributory infringement of the Gullborg patent in suit.

We have already quoted (on page 26 of this brief) parts of the subsequent brief in which counsel for the Hollingshead Company so far conceded infringement as to have led them to say,

> "Thus, too, the Beezley affidavit and accompanying plaintiff's exhibits on pages 19 to 25 inclusive of the record and the Plaintiff's 'Exhibit A Beezley Affidavit' and Plaintiff's Exhibit No. 15, page 375 of record, require no consideration because they relate solely to a defendant's device on which no appeal was taken."

It was only upon their second appeal (No. 6419) that some of the former counselors for the Hollingshead Company evolved a theory upon which to contend in the Appellate Court that the "grease gun" sold to Beezley did not involve a contributory infringement of the Gullborg patent,—of which, however, the validity was still conceded.

The Only Question Which this Writ of Certiorari Presents to this Court Concerns this Belatedly Trumped-Up Theory and Contention of Non-Infringement in and by the Hollingshead Company's Sale of Compressors and Couplers of this "Beezley Type."

We do not mean to suggest that counsel for the Hollingshead Company had never previously thought of contending that its sales of the "Beezley type" compressors and couplers did not involve an infringement. As a matter of fact, the deposition of an expert witness had been taken in an effort to represent the Beezley compressor as being of a kind such that its admittedly suction type coupler could not function to produce its "suction effect" (Rec., p. 196). In an effort toward the same end, arguments and demonstrations had been advanced to the District Court. It was, indeed, in the light and knowledge of all of the facts in this regard that all of the original counselors for Hollingshead in the Court of Appeals deliberately withdrew any contention of non-infringement. It was not, therefore, in connection with the first appeal, but only in connection with the second appeal that the contention of non-infringement was advanced, and then only, as we shall see, by the assertion of alleged facts in contradiction of the record and of the real facts.

A Picture of the Hollingshead Compressor and Coupler of the Kind Sold to Beezley.

Although the physical device which Hollingshead sold to Beezley is in evidence as Plaintiff's Exhibit A Beezley affidavit, we have thought that it might be convenient to the Court to have before it a picture of this device, and have here reproduced, therefore, a page of the Hollingshead Company's advertising literature, reproduced by counsel for Hollingshead as the last page of an appendix to its brief in its appeal No. 6419. Facing it we have reproduced also a page of the catalog of the Larkin Automotive Parts Company (Plaintiff's Exhibit O-1).

Except for the substitution of Hollingshead's Whiz name for the Larkin Company's Larkin-Thuro name, it is evident that the compressor and coupler sold by Hollingshead are identical with the compressor and coupler manufactured by Larkin.

The Larkin Company was enjoined against the further manufacture and sale of this compressor and coupler as a contributory infringement of the Gullborg patent. This writ of certiorari presents the question whether Hollingshead can sell this same device without such infringement.

THE R. M. HOLLINGSHEAD CO

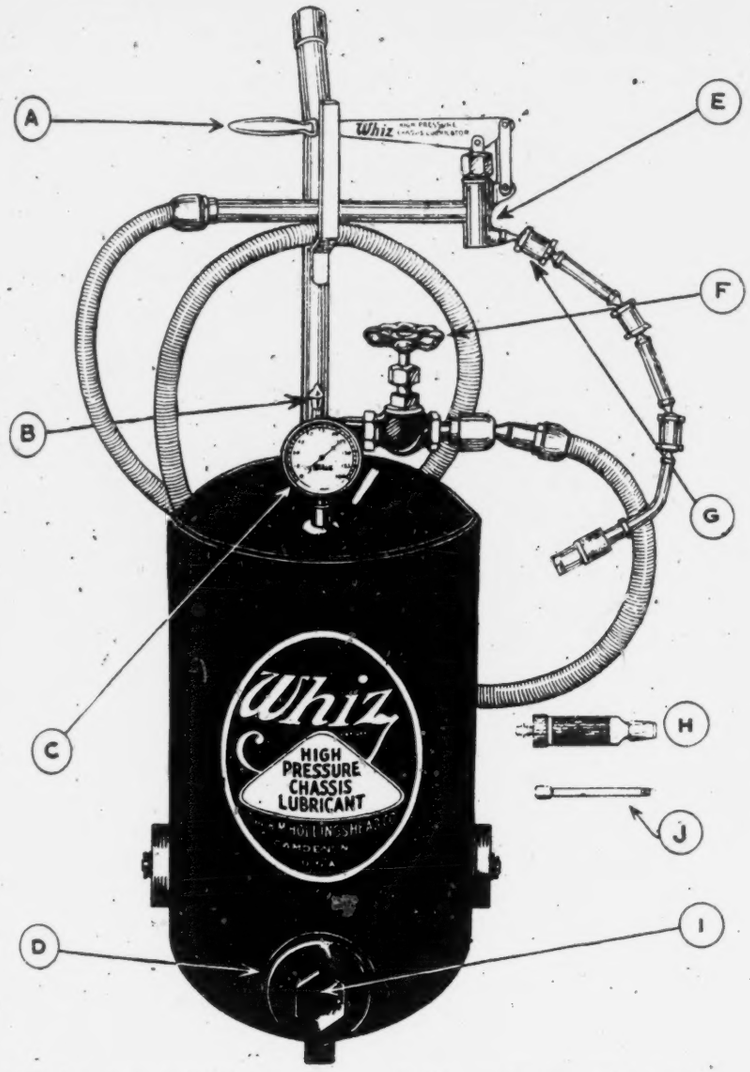

(a) Handle on Booster should be kept down when Lubricator is not in use.

(b) Air Valve for pumping up Lubricator. When refilling Lubricator remove cap and release air pressure the same as you would in an automobile tire, before removing plug "I".

(c) Air Gauge should show pressure ranging from 80 to 100 lbs. when in use.

(d) Metallic Expansion Gasket for sealing tank.

(e) Grease Booster for forcing lubricant into bearings.

(f) Valve controlling grease supply to Booster.

(g) Ball Jointed Hose and Connection for use on Alemite System.

(h) Attachment for cars equipped with Dot System. Attach Dot Adapter to coupler on end of ball jointed hose, and screw adapter to fitting on car.

(i) Release air by opening valve "B" before removing this plug for refilling.

(j) Attachment for Zerk fitting. This is used by unscrewing ball jointed hose from Booster and replacing with this adapter.

CAMDEN, N.J. U.S.A.

Picture of defendant's grease-dispensing equipment comprising defendant's Exhibit 8.

January 1, 1927. Printed in U. S. A.

THE LARKIN AUTOMOTIVE PARTS CO. DAYTON, OHIO, U.S.A.

LARKIN-THURO
Air Pressure Lubricator
Semi-Automatic -- One Man Operation
Complete Lubrication For All Makes of Cars or Trucks

Dot— Alemite— Zerk— Hudson— Essex— Differential—Transmission

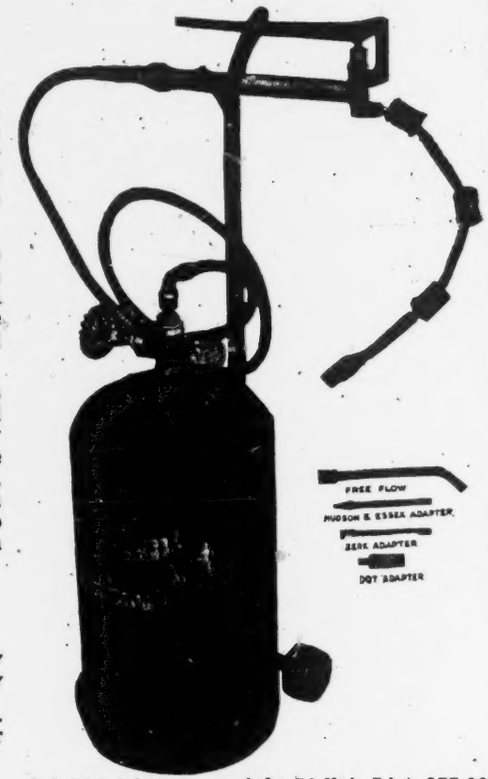

The Thuro Air Pressure Lubricator is designed for the Lubricant specialist who prefers oil for chassis lubrication. The advance features of the Thuro Air Pressure lubricator is the increased size container, portable, air operation, makes it a time saving device, one man operated and positive in operation.

The Superior Construction of the Thuro Air Pressure Lubricator is so different from other similar devices that it is unequaled in material, appearance and durability. The Tank is constructed from boiler Plate, all seams and joints are lap welded.

The Thuro Air Pressure Lubricator is 10 inches in diameter, tested to withstand many times the required pressure necessary for perfect operation. Tank bottoms are raised one inch from the end of the tank, leaving only tank shell in actual contact with floor or ground. Lubricator mounted on two wheels, equipped with all steel handle which extends 36 inches from the floor.

Specifications

Tank—LA-500—10"x18" 5 gal. oil capacity
Tank—LA-600—10"x24" 7 gal. oil capacity

Maximum working pressure 105 to 120 lbs. Tank filler opening 3"—pipe size—color bright green, and dull nickel.

EQUIPMENT

LA-500 (shipping weight 50 lb.) List $75.00
LA-600 (shipping weight 55 lb.) List $80.00

Standard Schraeder air filler valve, special design pressure gauge—tank outlet valve, six feet heavy duty metal flexible Hose—Thuro High Pressure Booster—maximum pressure 7500 lbs. to the square inch, three joint all steel flexible ball jointed hose—give a maximum hose length approximately 10 feet complete. Adapters furnished for lubricating cars equipped with Dot, Alemite and Zerk fittings—Free flow nozzle for filling Differentials and Transmissions also special nozzle for lubricating Hudson and Essex cars.

THE LARKIN AUTOMOTIVE PARTS CO., DAYTON, OHIO, U. S. A.

LARKIN-THURO LUBRICATION KEEPS THE UPKEEP DOWN

The Gullborg Patent No. 1,307,734 in Suit.

We have reproduced and insert on the following pages a complete copy of the Gullborg patent in suit. (Rec., p. 411.) The drawings of this patent have become so blurred in the processes of repeated reproduction that some of the details are obscured. Accordingly, therefore, we have reproduced on a larger and clearer scale the principal figures of the drawings of this patent.

A. V. GULLBORG.

LUBRICATING MEANS.

APPLICATION FILED DEC. 21, 1918.

1,307,734.

Patented June 24, 1919.

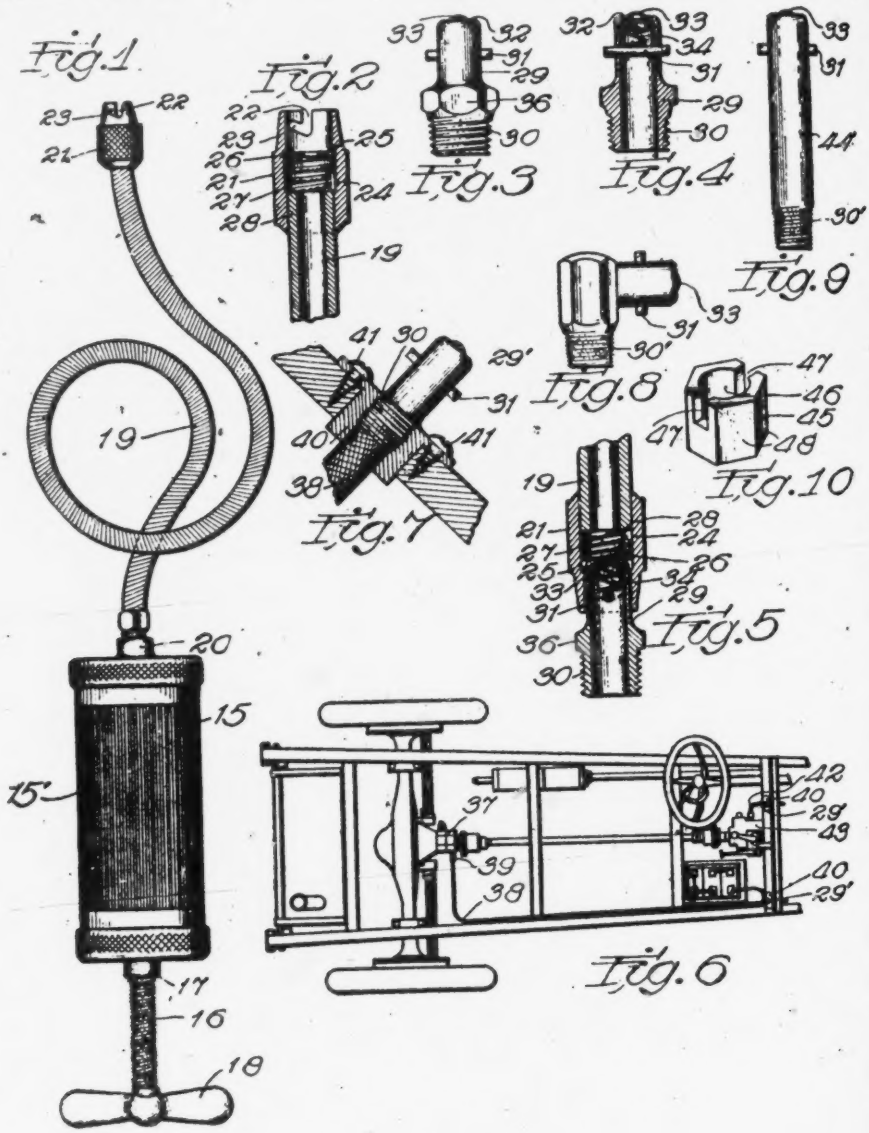

Witnesses:
Andrew Wintercorn
Earl F. Pierce

Inventor
Arthur V. Gullborg
By Williams, Bradbury & Lee
Attys

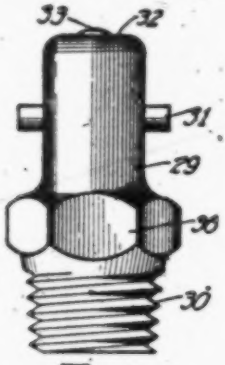

Fig. 3

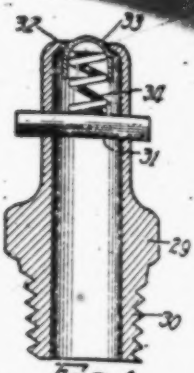

Fig. 4

Fig. 1

Fig. 2.

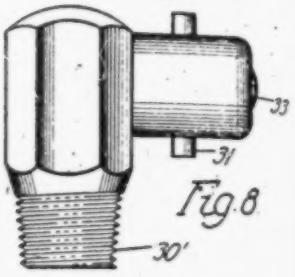

Fig. 8

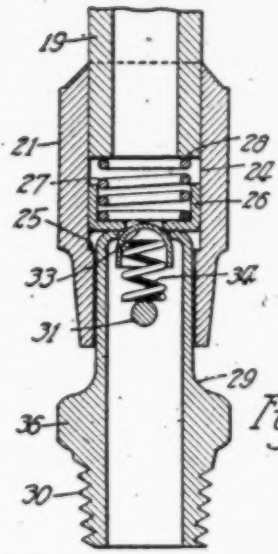

Fig. 5.

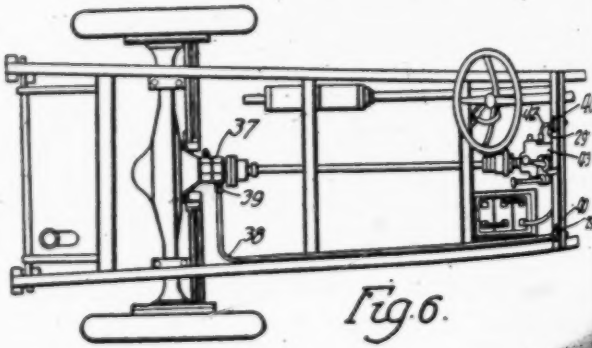

Fig. 6.

UNITED STATES PATENT OFFICE.

ARTHUR V. GULLBORG, OF CHICAGO, ILLINOIS.

LUBRICATING MEANS.

1,307,734. Specification of Letters Patent. Patented June 24, 1919.

Application filed December 21, 1918. Serial No. 267,868.

To all whom it may concern:

Be it known that I, ARTHUR V. GULLBORG, a citizen of the United States, residing at Chicago, in the county of Cook and State of Illinois, have invented a certain new and useful Improvement in Lubricating Means, of which the following is a full, clear, concise, and exact description, reference being had to the accompanying drawing, forming a part of this specification.

My invention relates to lubricating means, and is especially concerned with means for supplying suitable lubricants to parts of machines or apparatus requiring lubrication where these parts are difficult to gain access to, and is further concerned with the provision of apparatus for supplying lubricants under pressure to movable parts, the said means comprising a grease pump or gun provided with means for detachably connecting it with the various parts to be lubricated.

The objects of my invention are:

1st. To provide novel means for supplying a lubricant under pressure to the parts of an apparatus to be lubricated, the said means comprising a grease pump or gun and means for detachably connecting the discharge of said grease pump or gun with the part to be lubricated.

2nd. To provide novel coupling means for connecting the grease gun with the parts to be lubricated, the said coupling means being so constructed that when the coupling members are uncoupled or disconnected from each other there will be no excess lubricant on the outer ends of the coupling members.

3d. To provide novel means for effectively sealing the joint between the coupling members so that the lubricant may be forced between the parts to be lubricated under a very heavy pressure.

4th. To provide novel means whereby lubricant may be supplied to parts to which it is difficult to gain access.

5th. To provide novel coupling members to be permanently secured to the parts to be lubricated.

6th. To provide novel means to assist in attaching and detaching a tubular coupling member to a part to be lubricated.

Further objects will appear as the description progresses, reference being had to the accompanying drawing in which,

Figure 1 is a side elevation showing my improved grease gun;

Fig. 2 is a longitudinal section through the coupling member thereof;

Fig. 3 is a side elevation of one type of coupling member adapted to be secured to the part to be provided with lubricant and co-acting with the coupling member of my grease gun for connecting the discharge outlet of the grease gun with the part to be lubricated;

Fig. 4 is a longitudinal section of the structure shown in Fig. 3;

Fig. 5 is a longitudinal section through the coupling members shown in Figs. 2 and 4, but taken on a plane at right angles to the section plane of Figs. 2 and 4 showing the two coupling members united;

Fig. 6 is a more or less conventional plan view of an automobile with the body thereof removed showing the novel means which I provide for conveying lubricant to parts ordinarily difficult to gain access to, the front portion of the automobile chassis being broken away;

Fig. 7 is a sectional view showing the means for securing my coupling members to the ends of the conduits for conveying lubricant to the parts difficult of access;

Fig. 8 is a side elevation of a modified form of coupling member;

Fig. 9 is a side elevation of a still further modification of my coupling member; and

Fig. 10 is a perspective view of the means which I employ for rotating the coupling members shown in Fig. 9 in either direction to attach it to or detach it from the part to be provided with a lubricant.

Similar characters of reference refer to similar parts throughout the several views.

Referring to the drawings, the reference character 15 indicates the barrel of my improved grease gun or pump which is provided in a wellknown manner with a plunger, not shown, which is reciprocated in the barrel 15 by means of a screwthreaded piston rod 16 which co-acts with a screwthreaded nut 17, the piston 16 being provided with a handle 18. The barrel 15 is provided with ribs or corrugations 15′ to insure a firm grip of the hand thereon. A flexible conduit 19, of any suitable and wellknown construction, has one end secured to the discharge outlet 20 of my pump and the other end is provided with a hollow coupling member, indicated in general by the reference character 21. The free end of this coupling member, as shown in Fig. 2, is provided with a

bayonet slot 22, the transverse portion 23 of which is inclined from the inner end of the longitudinal portion of the slot toward the outer end of the coupling member for a purpose which will be referred to later on. The bore of the coupling member is enlarged at 24 to provide an annular shoulder 25. A perforated cup leather or sealing disk 26 is slidably mounted in the annular portion 24 of the bore of the coupling and is urged against the shoulder 25 by means of a coiled spring 27, one end of which abuts against the cup leather or sealing disk 26 and the other end of which abuts against the adjacent end 28 of the conduit 19. This end of the conduit may be soldered or secured in any convenient manner to the coupling member.

Referring to Figs. 3 and 4, the reference character 29 indicates as a whole a second coupling member which co-acts with the coupling member just described. This coupling member is in general tubular in form and is provided at one end with screwthreads 30 for securing it to the part to be lubricated. A pin 31 extends through and projects from the opposite sides of the other end of the tubular member. This end of the tubular member is flanged inwardly, as indicated at 32, to form a valve seat with which the hollow capsule shaped valve 33 co-acts. A spring 34 interposed between the pin 31 and the hollow valve 33 urges the latter against the valve seat 32. My purpose in making the valve 33 hollow is, first, to provide sufficient room for the spring 34 without materially increasing the length of the coupling member, and, second, to provide means which will tend to prevent the spring 34 from buckling or flexing longitudinally when the valve 33 is pushed inwardly to admit the lubricant. My invention contemplates the provision of facets 36 to receive the jaws of a wrench whereby the coupling member may be attached to or detached from the parts to be lubricated.

In Fig. 5 I have shown the coupling members 21 and 29 coupled together. In this position it will be noted that the spring 27 is partially compressed and that the sealing disk 26 is displaced from the annular shoulder 25 by the end of the coupling member 29. When the piston of the gun pump is actuated to force lubricant through the conduit 19 under pressure this pressure will cause the sealing disk 26 to seal the joint between the two coupling members and thus prevent any escape of lubricant over the sides of the coupling member 29. On account of the fact that the transverse portion 23 of the bayonet slot in the coupling member 21 is inclined toward the open end of this coupling member it is necessary in order to detach this coupling member from the coupling member 29 to move it toward the coupling member 29. This movement causes an additional small quantity of lubricant to be forced into the coupling member 29. When the coupling member 21 is then turned to permit the pin 31 to slide in the longitudinal portion of the slot 22 the sealing disk 26 is moved toward the end of the coupling member 29 under the pressure of the spring 34. This causes the sealing disk 26 to move toward the outer end of the coupling member 21 and thereby produces a slight vacuum which causes any grease which might otherwise remain on the outer end of the coupling member 29 or the outer side of the valve 33 to be sucked back behind the sealing disk 26, and thereby prevents any excess of lubricant from remaining on the end of the coupling member 29 or on the outside of the valve.

From the above description it will be seen that I have provided means for conveying a lubricant to the part or parts to be lubricated which not only prevents the loss of lubricant, even though the lubricant may be forced between the bearing surfaces under very high pressure, but also prevents the lubricant from remaining upon exposed portions of the coupling members after these have been uncoupled, and subsequently lost. This feature is of importance where, as I will describe later on, the coupling members are located at readily accessible points and where, in case the parts being lubricated form a part of a motor vehicle or other similar structure, the clothes of the operator are likely to come in contact with these coupling members.

Referring to Fig. 6 in which I have disclosed a portion of a motor vehicle with the body thereof removed, the reference character 37 indicates a bearing in the differential casing which is supplied with lubricant by a conduit 38 connected therewith by a suitable hollow coupling 39. The other end of the conduit 38 is brought forwardly in the vehicle and is secured to either the dash or the instrument board, as may be found convenient, by means of a floor socket 40, shown in detail in Fig. 7, which is secured in place by means of the screws 41 and is provided with an internal screwthread for receiving the screwthreaded portion 30 of a coupling member 29'. This coupling member 29' is similar to that shown in Figs. 3 and 4, except that it is not provided with the facets 36 for receiving the jaws of a wrench. The forward end of the conduit 38 may be soldered or otherwise secured in the socket 40. The reference character 42 indicates another conduit for conducting oil from the coupling member 29' to the transmission housing 43.

While I have illustrated means for conducting lubricant to but two portions of this automobile vehicle it is to be

stood that conduits similar to 38 and 42 may be used for conducting lubricant to any portion of the vehicle which it is desired to lubricate. Furthermore, this feature of my invention is not to be limited to means for lubricating motor vehicles, but is capable of being used for lubricating any apparatus whether the parts to be lubricated are or are not difficult of access.

In Fig. 8 I have shown a modified form of a coupling member to be secured to a part to be lubricated. This coupling member is L shaped and one end thereof is provided with screwthreads 30' and the other end thereof being provided with a pin 31 and a spring-pressed valve or closure 33 similar to that described in connection with Figs. 3 and 4. The purpose of this coupling member is to provide means for connecting the coupling member 21 with a part to be lubricated which would otherwise be difficult of access if provided with a straight coupling member such as that shown in Figs. 3 and 4.

In Fig. 9 I have disclosed a still further modification of my coupling member wherein it is formed from a tubular member 44 of substantially constant diameter which is not provided with means for co-acting with a wrench to attach or detach it to the part to be lubricated. In order to thus attach or detach this member I provide the means illustrated in Fig. 10. This means comprises a sleeve-like member 45 having a bore 46 therein for receiving the tubular member 44 and slots 47 for receiving the ends of the pin 31 of the tubular member 44. The member 45 is provided with facets 48 for co-acting with a wrench or other tool for rotating this sleeve.

While I have described the preferred embodiments of my invention it is to be understood that it is capable of other adaptations and modifications within the scope of the appended claims.

Having thus described my invention what I claim as new and desire to secure by Letters Patent of the United States is:

1. The combination with a hollow coupling member having a pin projecting from one side thereof and a spring-pressed closure, of a pump having a flexible conduit connected with the outlet thereof, a second hollow coupling member secured to the other end of said conduit for receiving the closed end of said first named coupling member and provided with a bayonet slot for receiving said pin, the transverse portion of said slot being inclined from the longitudinal portion thereof toward the outer end of the coupling member, the bore of said coupling member being enlarged to provide a shoulder, a perforated sealing disk slidably mounted in the enlarged portion of said bore, and a spring confined between the ends of said conduit and said disk for urging said disk against said first named coupling member.

2. The combination with a hollow coupling member having a pin projecting from one side thereof and a spring-pressed closure, of a pump, a discharge conduit having one end secured to the outlet of said pump, a second hollow coupling member for receiving the closed end of said first named coupling member secured to the other end of said conduit and provided with a bayonet slot adapted to co-act with said pin, a perforated sealing disk mounted to reciprocate in the bore of said coupling member, means for yieldingly urging said sealing disk against the closed end of said first named coupling member, and means for limiting the movement of said sealing disk in the direction of said second coupling member.

3. The combination with a hollow coupling member having a spring-pressed closure, of a pump, a discharge conduit having one end secured to the outlet of said pump, a second hollow coupling member for receiving the closed end of said first named coupling member secured to the other end of said conduit, a perforated sealing disk mounted to reciprocate in the bore of said coupling member, means for yieldingly urging said sealing disk against the closed end of said first named coupling member, and means for limiting the movement of said sealing disk toward said second coupling member.

4. The combination with a hollow coupling member having a spring-pressed closure, of a pump, a discharge conduit having one end secured to the outlet of said pump, a second hollow coupling member for receiving the closed end of said first named coupling member secured to the other end of said conduit, a perforated sealing disk mounted to reciprocate in the bore of said coupling member, and means for yieldingly urging said sealing disk against the closed end of said first named coupling member.

5. The combination with a pump having a flexible conduit connected with the outlet thereof, of a hollow coupling member secured to the other end of said conduit and provided with a bayonet slot, the transverse portion of said slot being inclined from the longitudinal portion thereof toward the outer end of the coupling member, the bore of said coupling member being enlarged to provide a shoulder, a perforated sealing disk slidably mounted in the enlarged portion of said bore, and a spring confined between the ends of said conduit and said disk for urging said disk toward said shoulder.

6. The combination with a pump having a discharge outlet, of a coupling member connected with said discharge outlet and provided with a bayonet slot, the transverse

portion of said slot being inclined from the inner end of the longitudinal portion thereof toward the outer end of said coupling member, a perforated sealing disk slidably mounted in the bore of said coupling member, and means for yieldingly urging said sealing disk toward the outer end of said coupling member, and means for limiting the movement of said sealing disk toward the outer end.

7. The combination with means for supplying lubricant under pressure; said means comprising a discharge outlet, of a coupling member connected with said discharge outlet, a perforated cup leather slidably mounted in said coupling member, and means for yieldingly urging said cup leather toward the outer end of said coupling member.

8. The combination with an apparatus having a part to be lubricated, of a conduit for conducting lubricant to said part, a coupling member secured to the end of said conduit and provided with a spring-pressed valve closure, means for supplying lubricant to said conduit comprising a receptacle provided with a discharge outlet, a second coupling member connected with said discharge outlet, means for detachably uniting said coupling members, and means for sealing the joint between said coupling member and for removing excess lubricant from the adjacent ends thereof when said coupling members are uncoupled.

9. The combination with an apparatus having a part to be lubricated, of a conduit for conducting lubricant to said part, a coupling member secured to the end of said conduit and provided with means for supplying lubricant to said conduit comprising a receptacle provided with a discharge outlet, a second coupling member connected with said discharge outlet, means for detachably uniting said coupling members, and a pliable gasket for sealing the joint between said coupling members.

10. The combination with an apparatus having a part to be lubricated, of a conduit for conducting lubricant to said part, a coupling member secured to the end of said conduit and provided with means for supplying lubricant to said conduit comprising a receptacle provided with a discharge outlet, a second coupling member connected with said discharge outlet, and means for detachably uniting said coupling members and for removing excess lubricant from the adjacent ends thereof when said coupling members are uncoupled.

11. The combination with a bearing provided with a member for receiving lubricant, of means for supplying lubricant thereto comprising a hollow member, means for supplying lubricant to said hollow member under pressure, means for detachably connecting said members, and means for sealing said connection comprising a gasket positioned between said members and held against one of said members by the pressure of the lubricant.

12. The combination with a bearing provided with a member for receiving lubricant, of means for supplying lubricant thereto comprising a hollow member, means for supplying lubricant to said hollow member under pressure, means for detachably connecting said members, means for sealing said connection comprising a gasket positioned between said members and held against one of said members by the pressure of the lubricant, and a spring for initially positioning said gasket against said member.

13. The combination with a receptacle for receiving lubricant, of means for supplying lubricant to said receptacle comprising a hollow member, means for forcing lubricant into said hollow member under pressure, and means for connecting said hollow member to said receptacle in fluid-tight relation comprising a pliable member positioned in said hollow member and having one face for contacting with said receptacle, the other face of said pliable member being subjected to the pressure of the lubricant in said hollow member.

14. The combination with a grease cup comprising a tubular member having one end flanged inwardly to provide a closure seat, a closure, a pin extending through said tubular member and from both sides thereof, and a spring confined between said pin and closure, and tending to hold said closure on its seat, of a grease pump having a discharge conduit, and means co-acting with the ends of said pin for detachably connecting the discharge end of said conduit with said grease pump.

15. The combination with a grease cup comprising a tubular member having a closure seat, a closure, a pin extending through said tubular member and from both sides thereof, and a spring confined between said pin and closure, and tending to hold said closure on its seat, of a grease pump having a discharge conduit, and means co-acting with the ends of said pin for detachably connecting the discharge end of said conduit with said grease cup.

16. The combination with a grease gun having a discharge conduit, of means for connecting said conduit with a bearing comprising a tubular member, co-acting means on said conduit and said tubular member for detachably connecting said conduit and tubular members, and a flexible member for sealing the joint between said conduit and said tubular member, said flexible member having an aperture for the passage of lu-

bricant from said conduit to said tubular member, a portion of one face of said flexible member being positioned so as to be subjected to any pressure created in said conduit to force it against said tubular member.

17. The combination with means for supplying lubricant under pressure comprising a discharge member, of means for connecting said discharge member to a bearing comprising a tubular member, and means for detachably connecting said members in sealed relation comprising means subjected to the pressure created in said members, the said means being positioned between said members and held against one of said members by said pressure.

18. The combination with a member for receiving lubricant, of means for supplying lubricant thereto under pressure comprising a tubular member, means for detachably connecting said tubular member to said lubricant-receiving member in sealed relation comprising a flexible member provided with an aperture for the passage of lubricant, one face of said member being subjected to the pressure of the lubricant.

In witness whereof, I hereunto subscribe my name this 14th day of December, 1918.

ARTHUR V. GULLBORG.

Witnesses:

JOHN E. CARLSON,

JOHN L. STEFFEN.

DISCLAIMER.

1,307,734.—*Arthur V. Gullborg*, Chicago, Ill. LUBRICATING MEANS. Patent dated June 24, 1919. Disclaimer filed August 29, 1927, by the assignee by mesne assignments, *The Bassick Manufacturing Company.*

Hereby enters this disclaimer to that part of the claims in said specification which is in the following words, to wit:

"12. The combination with a bearing provided with a member for receiving lubricant, of means for supplying lubricant thereto comprising a hollow member, means for supplying lubricant to said hollow member under pressure, means for detachably connecting said members, means for sealing said connection comprising a gasket positioned between said members and held against one of said members by the pressure of the lubricant, and a spring for initially positioning said gasket against said member."

[*Official Gazette September 13, 1927.*]

The Construction and Mode of Operation of the Coupler of the Gullborg Patent No. 1,307,734.

In the accompanying Figure 1 we have illustrated the compressor and coupler exactly as they are disclosed in the Gullborg patent (Rec., p. 411). At the left-hand side of this drawing the coupler is shown in attachment with one of the fittings of the patent. "A perforated cup leather or sealing disc 26 is slidably mounted in the annular portion 24 of the bore of the coupling, and is urged against the shoulder 25 by means of a coiled spring 27, one end of which abuts against the cup leather or sealing disc 26, and the other end of which abuts against the adjacent end 28 of the conduit 19." (Rec., p. 413, line 7.) When the coupler is attached to the fitting, the end of the fitting pushes the cup leather sealing disc 26 away from the shoulder 25, and into the annular portion 24 of the bore of the coupler.

The operator then moves forwardly the plunger or piston in the barrel of the grease gun or pump by means of the screw-threaded piston rod associated with the handle. This advancement of the plunger forces grease from the barrel of the grease gun through the flexible conduit leading to the coupler, and thence through the perforated sealing disc 26 of the coupler and past the ball check valve in the head of the pin fitting, and thence through the passageway in the center of the shackle bolt to the bearing surface to be lubricated. The grease under pressure as it enters the coupler and passes on through the coupler to the bearing surface is indicated in red.

When the injection of grease under high pressure into a given bearing has been completed, the plunger of the compressor is backed off to relieve the pressure

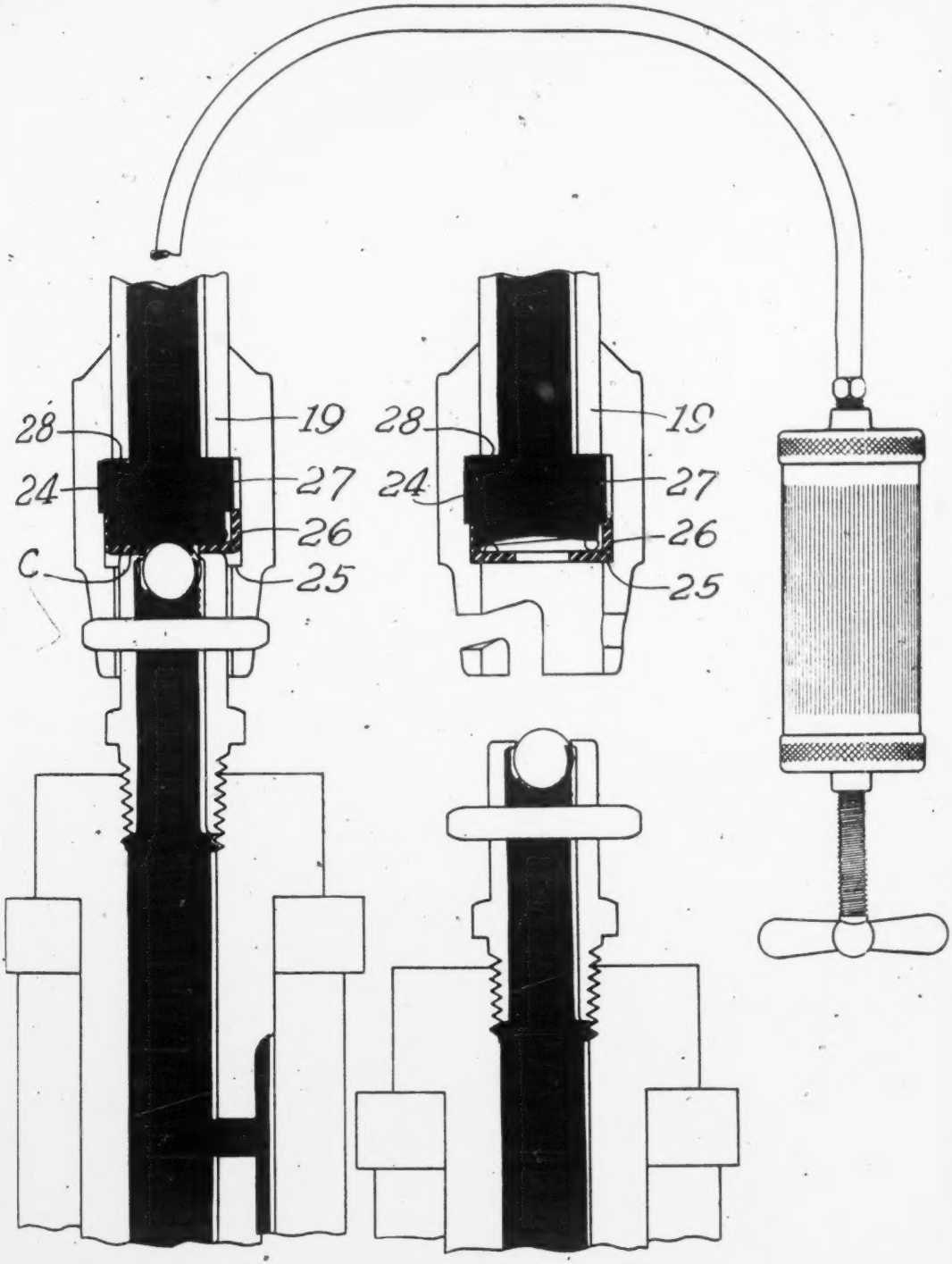

FIG. 1.

upon the grease, whereupon the coupler is detached from the pin fitting.

When the coupler is detached from the pin fitting by disengaging the bayonet slots of the coupler, as shown in the central view in Fig. 1, the perforated cup leather or sealing disc 26 is pushed downwardly by the spring 27, until the periphery of the sealing disc 26 engages the shoulder 25 at the end of the cylindrical bore 24 of the coupler.

When the sealing disc 26 is thus pushed downwardly by the spring 27, the space between the sealing disc 26 and the conduit 19 is enlarged slightly. The grease, like other liquids, is substantially non-compressible and non-expansible. The grease cannot and does not, therefore, expand (as would an elastic medium, like air) to fill this enlarged space.

The result is a tendency to produce a vacuum (*i. e.*, an unfilled space) within the bore of the coupler above the sealing disc 26, as indicated by the absence of the (red colored) grease just above the sealing disc 26 in the central view of Fig. 1. This vacuum creates a suction, *i. e.*, a tendency of the air to rush in to fill the empty space. This air rushing in through the crevice at C between the end of the fitting and the outer face of the sealing disc 26 carries with it the blob of grease which would otherwise be left on the end of the fitting and on the ball valve at the end of the fitting, and carries this excessive grease back through the hole or perforation in the sealing disc 26 and into the space in the bore of the coupler above the sealing disc 26.

The Hollingshead Company's Equipment.

The respondent Hollingshead Company sold two kinds of couplers (with their associated compressors). The coupler sold to Cumming was not of the "suction" type. This coupler bought by Cumming was found by the District Court (Rec., pp. 36, 522) to have been sold in contributory infringement of claims 14 and 15 only of Gullborg patent 1,307,734. The Sixth Circuit Court of Appeals held that claims 14 and 15 must be limited to the "suction effect" type of coupler, and that the compressor and coupler sold to Cumming did not, therefore, infringe these claims. (Opinion, Rec. p. 601.)

The other type of coupler,—sold by Hollingshead to Beezley, had a "suction effect" coupler. The further sale of this suction effect coupler was enjoined by the District Court, not only under claims 14 and 15, but also under claims 1, 2, 3, 4, 5, 6, 8 and 10 of this Gullborg patent 1,307,734.

On behalf of the petitioner we have always asserted claims 1, 2, 3, 4, 5, 6, 8 and 10 to be limited to couplers of the "suction effect" type. We adhere to that view. The Hollingshead Company has always entertained and expressed the same view. The opinion of the Sixth Circuit Court of Appeals entered November 14, 1934, is based upon and expresses the same view. Everybody concerned has, therefore, entertained the same understanding of these claims, and still entertains the same understanding.* Our petition for a writ of certiorari

---

* In respondent's brief in opposition to our petition for writ of certiorari, counsel for the respondent say on page 2, relative to the foregoing statement:

"Except as hereinafter qualified, we accept the following statement in Petitioner's brief (p. 18):

"'On behalf of the petitioner we have always asserted claims 1, 2, 3, 4, 5, 6, 8 and 10 to be limited to couplers of the "suction effect" type. We adhere to that view. The Hollingshead Company has always entertained and expressed the same view. The opinion

has to do solely, therefore, with the question of infringement of claims 1, 2, 3, 4, 5, 6, 8 and 10, (although claims 14 and 15 are, in any event, broad enough to cover the "suction effect" coupler).

The point of our petition is, briefly, that the compressor which Hollingshead sold to Beezley was of the "suction effect" type.

The coupler of this compressor which Hollingshead sold to Beezley is, in construction, mode of operation and result, substantially identical with the "suction effect" coupler illustrated and described in the Gullborg patent in suit. It is identical in construction, mode of operation and result with the couplers of the compressors held by the Seventh Circuit Court of Appeals to infringe the "suction effect" claims of the Gullborg patent. We have already explained just what the "suction effect" is and how it is developed in and by the coupler of the Gullborg patent in suit. We wish now to call your Honor's attention to the construction and mode of operation of the coupler of the compressor sold by Hollingshead to Beezley, and then to compare this coupler with that held by the Seventh Circuit Court of Appeals to be sold in infringement of the Gullborg patent.

We shall wish to compare it also with the couplers previously held by the Sixth Circuit Court of Appeals to infringe.

---

of the Sixth Circuit Court of Appeals entered November 14, 1934, is based upon and expresses the same view. Everybody concerned has, therefore, entertained the same understanding of these claims, and still entertains the same understanding.'

"It will be noted that petitioner accepts the finding of the Circuit Court of Appeals that the **grease-gun** sold to Cumming, embodying (as is admitted by plaintiff), a **'non-suction-effect'** coupler, does **not** infringe **any** of the claims;—even claims 14 and 15 which plaintiff-petitioner contended are not limited to this 'suctional' feature, but which the Circuit Court of Appeals held must be so limited in order to be valid."

At a later point we shall have something to say relative to this one "qualification" which counsel for the respondent have interposed.

This qualification does not modify our statement that everybody concerned regards claims 1, 2, 3, 4, 5, 6, 8 and 10 of the Gullborg patent as describing and limited to the "suction-effect" coupler.

PLAINTIFF'S EXHIBIT 15

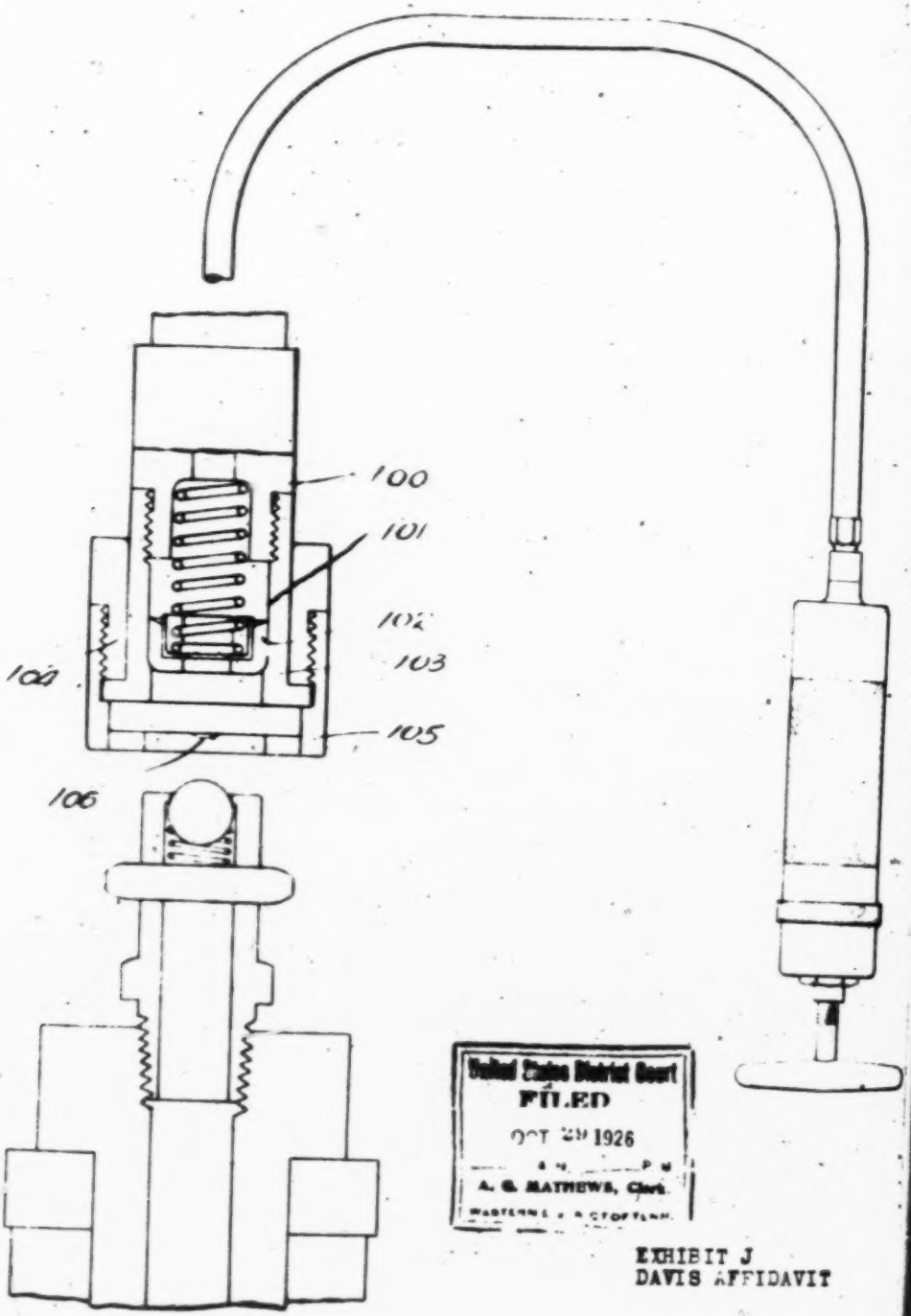

United States District Court
FILED
OCT 29 1926
A. G. MATHEWS, Clerk

EXHIBIT J
DAVIS AFFIDAVIT

The Compressor Sold by the Hollingshead Company to Beezley Included a Suction Effect Coupler Substantially Identical With Those Held by the Seventh Circuit Court of Appeals, and Previously Held by the Sixth Circuit Court of Appeals, to Infringe the Suction Effect Claims of Gullborg Patent No. 1,307,734.

Opposite this page we have reproduced Exhibit J drawing of the Davis affidavit, appearing at page 373 of record herein.* It illustrates the construction of the coupler forming a part of the compressor which the Hollingshead Company, respondent, sold to Beezley.

On the fly-page opposite this drawing of the Hollingshead equipment sold to Beezley, we have reproduced the same drawing, as Figure 2, but have shown the coupler both attached to a pin fitting and detached therefrom, as in the other drawings of this series. We have supplied reference numerals corresponding with those of the Gullborg patent drawing. Furthermore, we have shown in the left-hand view the condition of the grease during the period of injection. In the cen-

*In all of these drawings the coupler part is shown in an enlarged scale. The grease gun or pump part of the combination is shown in relatively small scale. All of the claims of the Gullborg patent describe the compressor or "pump" part of the combination in broad inclusive language. This "pump" or compressor element of the claims may therefore take any one of many equivalent forms. None of the compressors of any of the parties in any of the suits to which reference is made conformed in all of their minute details to these diagrammatic representations of the compressor part of the combination.

The brief filed on behalf of the respondent in opposition to our petition for writ of certiorari criticized our presentation of the defendant's "Beezley type" grease gun or pump as made in our petition for writ of certiorari, upon the ground that our diagrammatic illustration of the compressor part of the combination did not correspond with the details of the compressor as actually sold to Beezley by Hollingshead. We shall answer this criticism at a later point in our brief.

There was no criticism of the drawings and description of the Hollingshead Company's coupler as presented in our petition for writ of certiorari and as now repeated.

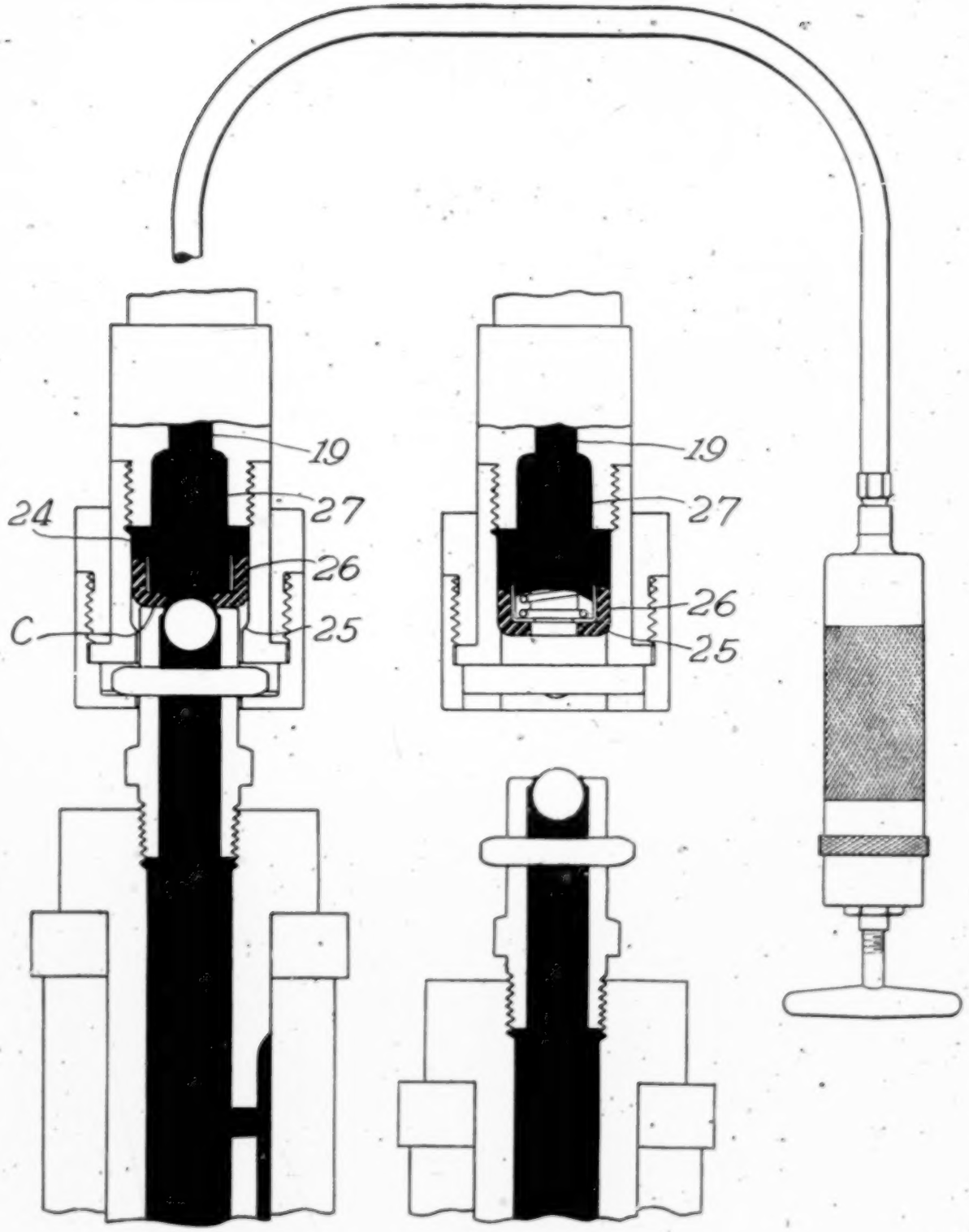

FIG. 2.

tral view we have illustrated in red the fact that the grease does not entirely fill the bore 24 of the coupler above the sealing disk 26.

It Is Conceded by the Respondent That This Coupler Part of the Apparatus Which Hollingshead Sold to Beezley Is a "Suction-Effect" Coupler Substantially Equivalent or Identical With the "Suction-Effect" Coupler Shown in the Gullborg Patent.

This concession is shown in part by the findings of fact proposed by defendant on November 19, 1932. The defendant was interested in having the findings distinguish between the non-suction effect coupler of the Hollingshead compressor sold to Cumming and the suction effect coupler of the compressor sold to Beezley. In order to emphasize this distinction, the defendant proposed the following findings of fact (Rec. p. 556):

> "1. That the defendant's coupler, exemplified in and forming a part of plaintiff's Exhibit A of the affidavit of D. A. Beezley of April 12, 1926, and also illustrated in the drawing constituting plaintiff's Exhibit 15, is a coupler of the 'suctional' type shown in the drawings of Gullborg patent No. 1,307,734 and described in the specification thereof and variously defined in claims 1, 2, 3, 4, 5, 6, 8 and 10 thereof.
>
> "2. That defendant's coupler, exemplified in and forming part of Exhibit A of the affidavit of O. A. Cumming of September 13, 1926 and illustrated in the drawing constituting plaintiff's Exhibit 16, does not embody the suction-producing construction shown in the drawings of the Gullborg Patent No. 1,307,734 and described in the specification of said patent and variously defined in claims 1, 2, 3, 4, 5, 6, 8 and 10 of said patent."

In his argument in support of this first proposed finding of fact, Mr. Kalish, on behalf of the defendant, said (Rec., p. 577):

> "The first finding of fact which we request is that this coupler which is identified as Exhibit A of the affidavit of D. A. Beezley, and also shown by the plaintiff in its drawing Exhibit 15, is of the suctional type shown in the drawings of the patent and described in the specifications and covered by these claims. Now that happens to be a fact that has been plaintiff's contention; it is the basis upon which that appliance was enjoined, and I can see no reason why that fact should not be stated."

This concession that the coupler of the compressor sold by Hollingshead to Beezley is of the suction effect type as shown in the Gullborg patent, was repeated in the respondent's brief in opposition to our petition for a writ of certiorari as follows:

> "It may be conceded,* as petitioner so elaborately argues in its brief, that the coupler part, *per se*, of the Beezley grease gun would have been capable, if combined with a pump of a different type, of having a so-called 'suction effect.'"

The asterisk in this quotation draws attention to a footnote by counsel for respondent, in which they say:

> "This is conceded merely for purposes of argument, but not admitted, because the evidence shows that no 'suction effect' can be produced with the type of pump used by defendant-respondent in its grease guns regardless of the construction of the coupler part."

We shall a little later address ourselves to the respondent's contention that the grease gun with which the Hollingshead Company associated its coupler was of a character which did not permit the suction effect coupler to utilize its suction effect.

For the moment we are saying merely that the coupler of the respondent's compressor as sold to Beezley was of the suction effect type illustrated in the drawings of Gullborg patent No. 1,307,734, and described in claims 1, 2, 3, 4, 5, 6, 8 and 10 of this patent. We shall at a later point in this brief take up the details of the grease gun part of the compressor sold to Beezley, and in connection therewith answer the respondent's argument that although they sell a grease gun equipped with a suction effect coupler, still the grease gun is of a kind which prevents the suction effect coupler from functioning as such.

Continuing for the time being, therefore, with a consideration of the coupler only, a comparison shows that the Hollingshead Company's suction effect coupler in this case is absolutely identical with the coupler manufactured and sold by the Larkin Automotive Parts Company as involved in a suit in the Seventh Circuit and as shown opposite the following page of this brief. This brings us to the decision of the Seventh Circuit Court of Appeals in *Larkin Automotive Parts Company and Montgomery-Ward & Co.* v. *Bassick* (C. C. A. 7), 19 Fed. (2d) 944.

The Construction and Mode of Operation of the Couplers Previously Held By the Sixth Circuit Court of Appeals to Infringe the "Suction effect" Claims of the Gullborg Patent 1,307,734.

Bassick v. O. K. Manufacturing Co., Appeals Nos. 4571 and 4572, 6th C. C. A., 18 Fed. (2d) 29.

Opposite this page of this brief we have reproduced Plaintiff's Exhibit Chart 118, which appears at page 664 of the record of Appeals Nos. 4571 and 4572 in the Sixth Circuit Court of Appeals, in the case of *Bassick v. O. K. Manufacturing Company et al.*, involving Gullborg patent No. 1,307,734. This record in the O. K. case is before the court as a physical exhibit, Plaintiff's Exhibits 4-A and 4-B. The construction illustrated was one of those found to infringe by the Sixth Circuit Court of Appeals.

Adjacent this exhibit drawing is a drawing, Figure 4, of the same equipment, in which we have indicated the grease in red. The reference letters correspond with those of the Gullborg patent. We have added the reference letter C to indicate the crevice through which there is a rush of air upon the downward movement of the sealing disc 26 upon the detachment of the coupler from the pin fitting.

Here, as in the construction of the Gullborg patent, the inward rush of air through the hole or perforation in the center of the sealing disc 26 carries any excess lubricant from the head of the fitting back into the space above the sealing disc 26 within the bore 24 of the coupler.

The sale of this device by The O. K. Manufacturing Company was held by the Sixth Circuit Court of Appeals, in its opinion at 18 Fed. (2d) 29, to be an infringement of the suction effect claims of the Gullborg patent in suit.

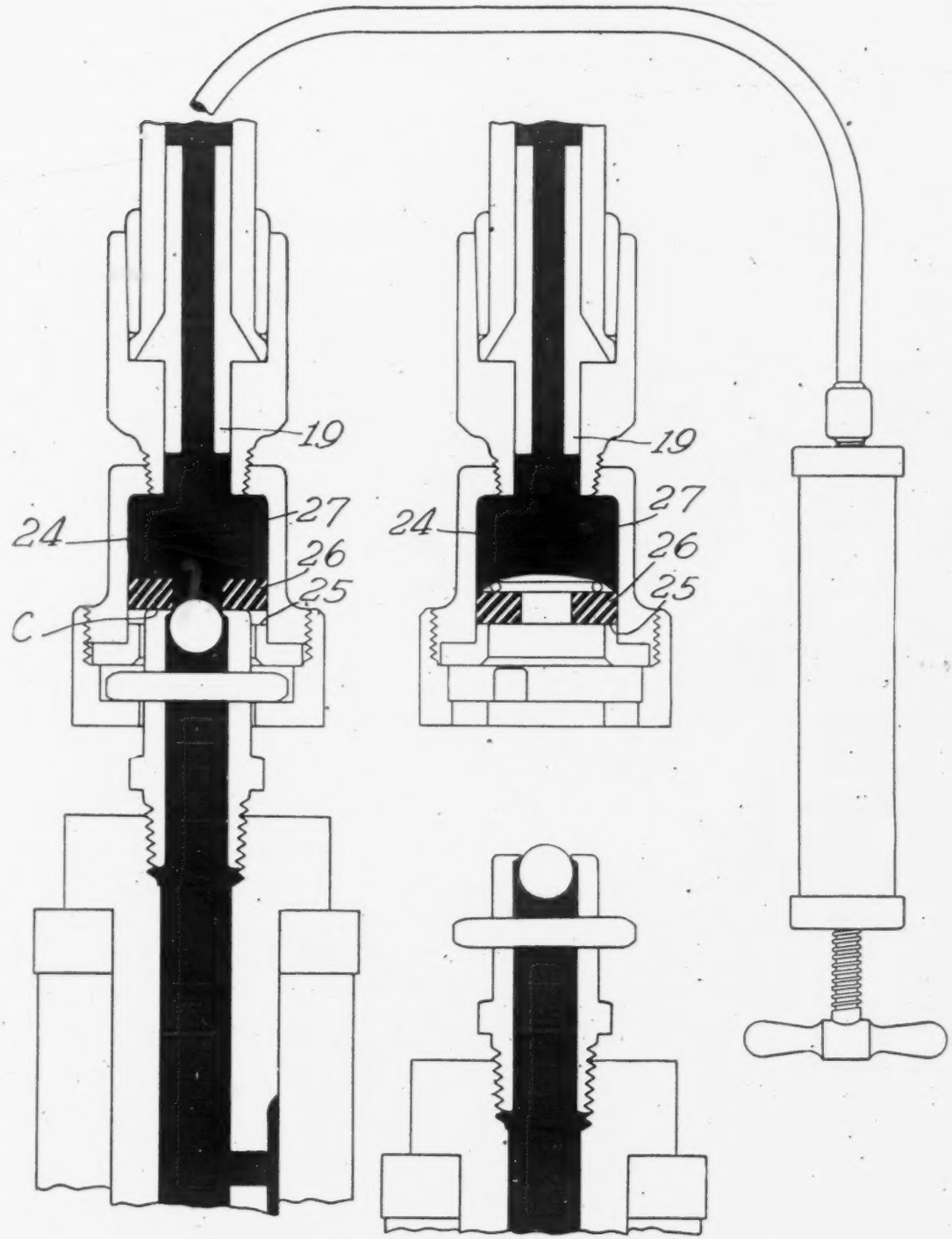

FIG. 4.

The Larkin Company's Coupler Before the 6th C. C. A.

Bassick v. *The Larkin Automotive Parts Co.*, Appeals Nos. 4601 and 4766, 6th C. C. A., 18 Fed. (2d) 29.

Opposite this page of this brief we have reproduced Plaintiff's Exhibit Chart 34 in the case of *Bassick* v. *The Larkin Automotive Parts Company*, decided by the Sixth Circuit Court of Appeals. This drawing appears at page 214, Vol. IV of the record in the Larkin case, which was offered in evidence as Plaintiff's Exhibits 3-A, 3-B, 3-C, and 3-D, herein.

Adjacent this drawing of the Larkin equipment, which is one of those found to infringe by the Sixth Circuit Court of Appeals, we have reproduced the exhibit drawing as Figure 5,—adding to it reference letters corresponding with those of the Gullborg patent and indicating in red the position of the grease during the period of injection and upon detachment of the coupler from the fitting.

In this case the sealing disc did not exactly *slide* within the bore of the coupler. The same results were secured by an equivalent construction, in which the leather sealing disc 26 was given a somewhat enlarged diameter. The outer periphery of this large sealing disc was clamped between metal shoulders. These metal shoulders were flared out toward the axis of the coupler in such a way as to permit the sealing disc to flex easily upon the attachment and detachment of the coupler. A metal thimble T was interposed between the spring 27 and the sealing disc 26 to transmit the pressure of the spring 27 to the sealing disc 26.

As shown in the left-hand view of Figure 5, the sealing disc was flexed upwardly so as to compress the spring 27 upon the attachment of the coupler to the

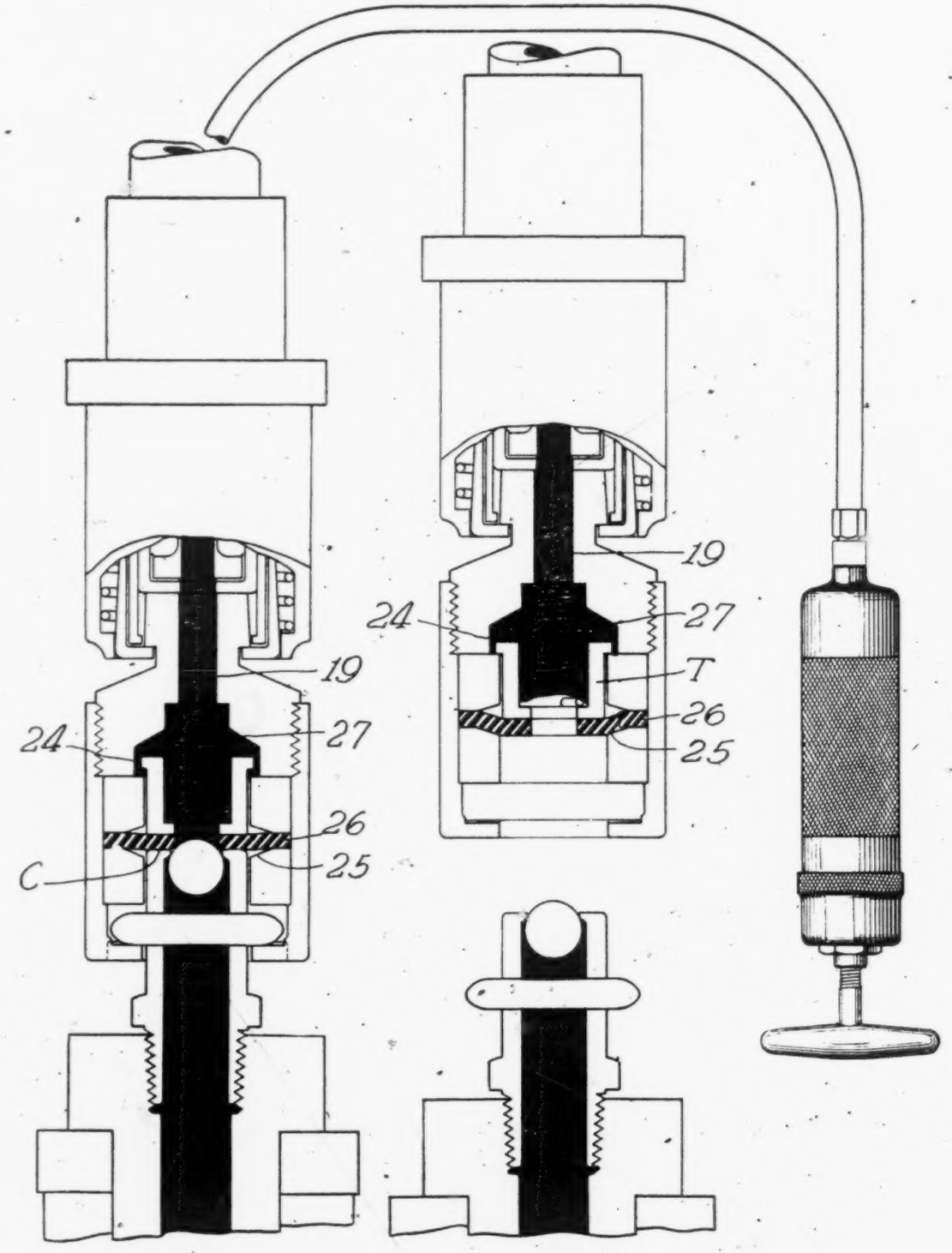

pin fitting. Upon the detachment of the coupler from the pin fitting, the spring 27 pushed the central portion of the sealing disc 26 downwardly until it engaged the shoulder 25. This downward movement of the sealing disc at the moment of disunion enlarged the space above the sealing disc, thereby tending to create a vacuum. Here, as in the other cases, there was a tendency of the air to rush in through the crevice C to fill the space in the coupler, which the grease could not and would not expand to fill.

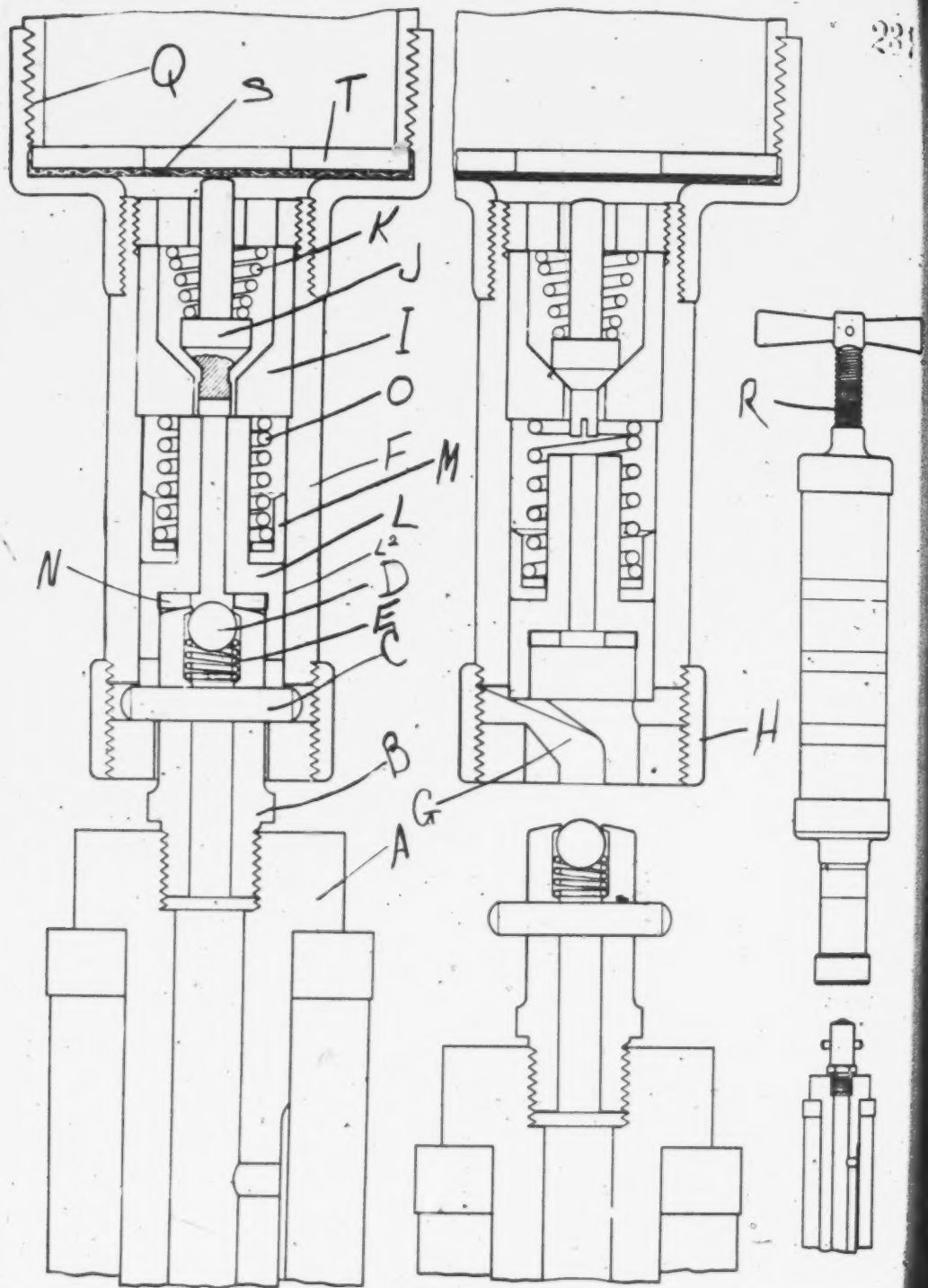

PLAINTIFF'S EXHIBIT NO. 11.
Defendant's Structure; Lyman Compressor, Coupling and Nipple.
(Filed Dec. 23, 1924.)

The Lyman Company's Coupler Before the 6th C. C. A.

The Lyman Manufacturing Co. v. Bassick, Appeals Nos. 4461 and 4462, 6th C. C. A., 18 Fed. (2d) 29.

Opposite this page of this brief, we have reproduced Plaintiff's Exhibit Chart No. 11, which appears at page 231 of the record in the Sixth Circuit Court of Appeals in the case of *Lyman Manufacturing Company v. The Bassick Manufacturing Company*, Appeals Nos. 4461 and 4462, decided in the opinion reported at 18 Fed. (2d) 29. The record is in evidence here as a physical exhibit, Plaintiff's Exhibit 5.

Adjacent the drawing of the Lyman equipment we have reproduced the same drawing as Figure 6, with the addition, however, of the reference letters corresponding with those of the Gullborg patent and showing the position of the lubricant in red.

In this instance the sliding sealing member was made partly of leather and partly of metal. We have applied the reference numeral 26 to the three parts of this sliding element. The central lead line runs to the metal piston. The lower face of this metal piston was provided with a leather gasket, to which we have run the lowermost lead line from 26. At the top of this sliding metal piston there was provided a cup leather, to which we have run the uppermost lead line from the numeral 26. A central stem of metal projected upwardly from the metal part of the piston 26 to operate a valve with which we are not here concerned. There was an aperture through the metal piston and through the gasket which engaged the head of the fitting.

Here, as in the other cases, it will be seen that the space above the sealing member and within the bore 24 of the coupler is enlarged by and upon the downward movement of the sealing member under the expansive force of the spring 27.

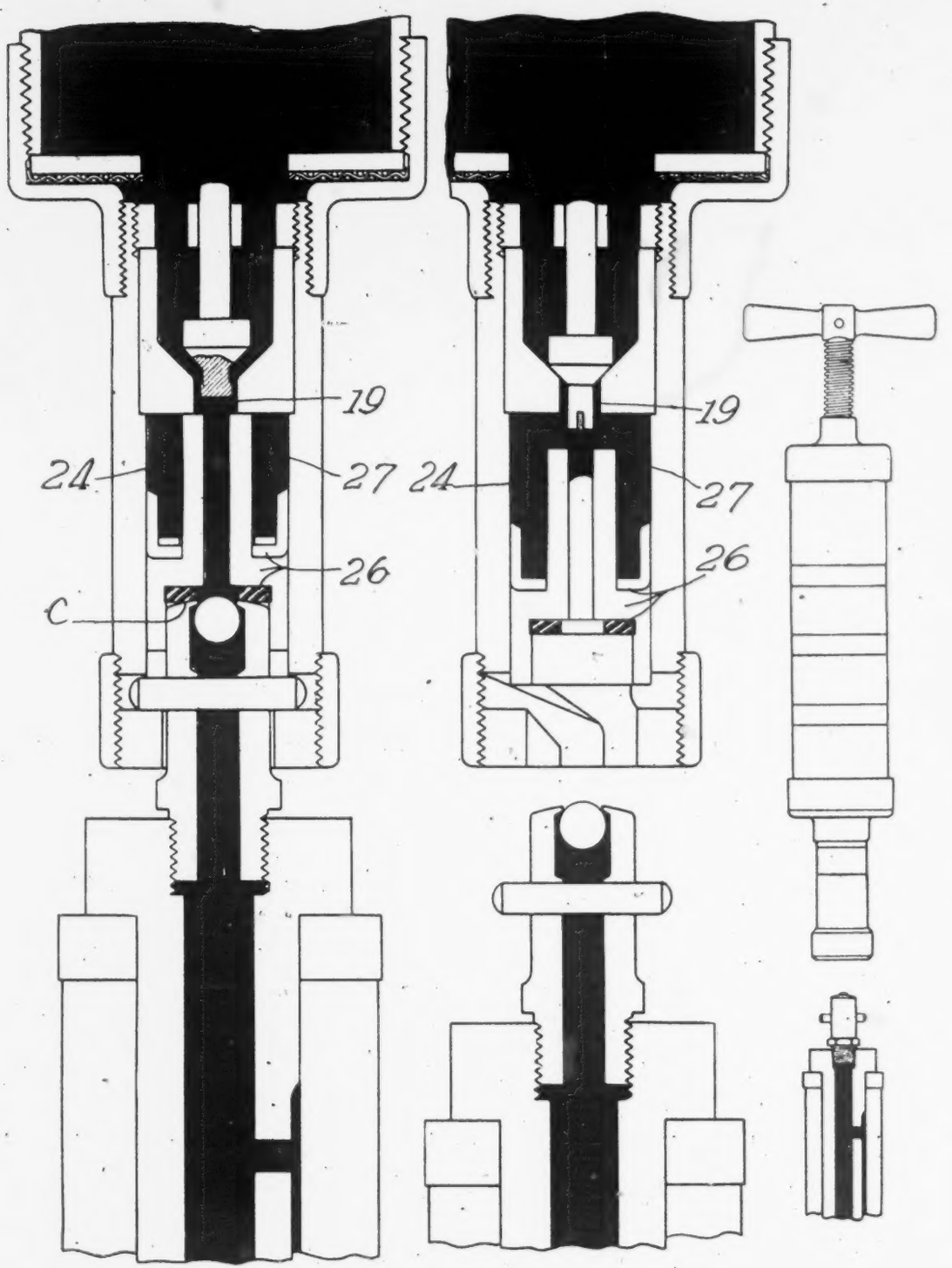

The present decision of the Sixth Circuit Court of Appeals is in conflict with these prior decisions of the same court.

The Decisions of the 2nd C. C. A. and the 3rd C. C. A. Covered Some Other Matters But Also Involved Decisions Holding Some or All of Claims 1, 2, 3, 4, 5, 6, 8 and 10 of Gullborg Patent No. 1,307,734 Valid and Infringed By Combinations of Fittings and Grease Guns and Couplers Essentially Identical With Those Previously Described.

We refer to the decisions of the Second Circuit Court of Appeals in *Bassick* v. *Adams*, 52 Fed. (2d) 36, and *Rogers* v. *Alemite*, 74 Fed. (2d) 1019. We shall not occupy the time and space necessary to cover the details of these decisions.

In Scores of Contested Cases the District Courts Have Uniformly Held That the Sale of Compressors Comprising Grease Pumps and Couplers Essentially Like Those Previously Described, Constituted a Contributory Infringement of Some or All of Claims 1, 2, 3, 4, 5, 6, 8 and 10 of Gullborg Patent No. 1,307,734.

In so far as the decisions of these District Courts have been reported, they can be determined from the list of suits on pages 2 to 8 of this brief. The decisions which have not been reported may be found in the "Adjudication Books" of which we shall leave copies with the Clerk at the time of the arguments herein.

In the Structure of the Gullborg Patent in Suit, As in the Case of All of the "Suction-Effect" Compressors Heretofore Held By the Sixth Circuit Court of Appeals and By the Seventh Circuit Court of Appeals and By Scores of District Courts to Infringe the Suction Effect Claims of the Gullborg Patent No. 1,307,734, It Is Necessary to Relieve the Pressure Upon the Grease in Order to Secure the Advantages of the "Suction Effect."

In foot note No. 5 of the Sixth Circuit opinion, the Court said:

> "Of course, in order to allow this vacuum and suction to develop, any heavy pressure on the grease must be stopped, either by the check valve used in some forms, or by the release of the plunger pressure, or both; and if there is any failure in this relief the grease, perhaps after momentary retraction, will continue to exude."

In the case of the compressor sold by the appellant to Beezley it is just as necessary to relieve any heavy pressure upon the grease before detaching the coupler from the fitting as it is in the construction of the patent in suit and in all of the other constructions which have been held to be infringements of its suction effect claims.

If the bearings of an automobile or other machine are frequently lubricated or otherwise kept open and free, relatively little pressure is required to force new grease into their interstices.

In many instances, however, the bearings are new and tight or not lubricated as frequently as should be. In such cases, the old grease becomes carbonized or it accumulates a deposit of road dust in such a way as to cake and fill the interstices of the bearing with what

the mechanics call "gumbo,"—a hard mass of gritty material. A bearing which has been "caked" with this hard and gritty "gumbo" is called a "frozen" bearing.

Prior to the advent of the Gullborg system, it was necessary, when a bearing became "frozen," for a mechanic to disassemble the various parts and then to soak them in gasoline and then to wash them off to dissolve and remove the "gumbo". After the parts had been freed of this hard and gritty material, they could be reassembled, whereupon fresh grease could be forced more or less easily into the bearing. This cleaning of "frozen" bearings was generally a long and difficult job, which could be performed only by a mechanic who had the necessary special tools and wrenches necessary for the disassembly and the reassembly of the parts comprising the bearing.

Among the objects of his invention, as stated in Gullborg's specification, were the provision of "novel means for supplying a lubricant under pressure to the parts of an apparatus to be lubricated" (page 1, line 24), and the provision of "novel means for effectively sealing the joint between the coupling members so that the lubricant may be forced between the parts to be lubricated under a very heavy pressure" (page 1, line 38).

Lubricating apparatus built in accordance with the Gullborg patent has commonly been designed to develop pressures of from five thousand pounds per square inch to ten thousand or twelve thousand pounds per square inch. (These enormous pressures are to be contrasted with pressures of about fifty pounds per square inch in the case of city water works hydrants, and pressures of about two hundred fifty pounds per square inch in steam locomotive boilers).

The application of grease under a pressure of five or ten thousand pounds per square inch to a "frozen"

bearing will ordinarily break or dislodge the caked "gumbo" in such a way as to open a passageway or channel through the bearing to admit an injection of grease. The injected grease dissolves the "gumbo" and washes it out of the bearing. In this way, the bearing becomes freed and lubricated. This greasing operation avoids the trouble and expense of disassembling the bearing and washing and cleaning the parts in gasoline.

When, therefore, in the use of the Gullborg apparatus a tight or "frozen" bearing is encountered, the resistance which the caked "gumbo" offers to the ingress of grease, causes an enormously high pressure to be developed within the grease in all of the passageways leading to the bearing, including those of the pin fitting, the coupler, the conduit, and the grease gun itself.

Grease, like other liquids, is practically incompressible and non-elastic. When the compressor, conduit, coupler, and fitting are subjected to pressures of five thousand pounds or ten thousand pounds per square inch, there is, however, a tendency to bulge all of the parts within which the grease is confined, and particularly to bulge the conduit leading from the grease gun to the coupler. The result is that the walls of the conduit are very slightly stretched and expanded. Like any other material which is stretched or bent, these walls of the conduit tend to return to their normal size and shape, thereby maintaining a high pressure upon the grease even after the advancement of the plunger of the grease gun or pump has been stopped.

The effect of high pressure within the grease delivered from the grease pump to the pin fitting, is to lock the coupler to the pin fitting with a vise-like grip. The reason for this will be apparent by reference to the drawings of the Gullborg coupler, as reproduced, for

example, in Fig. 3. of this brief. The pressure of the grease acting on the back of the sealing disc 26 forces this sealing disc against the end of the pin fitting. The effect is like an effort to eject the pin fitting from the bore of the coupler. The pin fitting is not, however, ejected from the bore of the coupler because of the engagement of the projecting ends of the cross pin 31 of the fitting with the bayonet slots 22, 23 of the coupler. Since the engagement of the cross pin with the bayonet slots of the coupler prevents the ejection of the pin fitting from the coupler, the force of the grease upon the back side of the sealing disc 26 exerts itself in forcing the sealing disc against the end of the fitting. The result is not only to lock the coupler to the fitting with a vise-like grip, but also to seal the joint between the disc 26 and the head of the pin fitting in such a way as to prevent the escape of grease at this junction point. The higher the pressure, the tighter the seal. The higher the pressure, the greater the force with which the coupler is locked to the pin fitting. As manufactured and sold, the sealing disc has an area of approximately one-eighth of a square inch. The pressure which it exerts upon the end of the pin fitting is therefore approximately one-eighth of twelve thousand pounds. Each of the bayonet slots of the coupler as shown in the drawings of the Gullborg patent, has a "transverse portion 23 which is inclined from the inner end of the longitudinal portion of the slot toward the outer end of the coupling member" (specifications, page 2, line 1).

The Hollingshead Company's coupler of Exhibit A, Beezley Affidavit, has corresponding notches inclined from the inner end of the longitudinal portion of the slot toward the outer end of the coupling member. These notches are very readily brought into engage-

ment with the cross pin of the fitting when the coupler is attached to the pin fitting. These notches are also very easily disengaged from the ends of the cross pin of the fitting when, after the lubricating operation, the grease pressure has dropped again to zero. But while a grease pressure of five thousand pounds or ten thousand pounds per square inch persists, it is almost impossible either by hand or by means of any convenient tool, to rotate the shell of the coupler relative to the pin fitting in such a way as to disengage these locking notches of the bayonet slots of the coupler from the projecting ends of the cross pin of the fitting.

In the case of a bearing which is free of "gumbo," the grease passes so easily into the interstices of the bearing that little pressure can be or is developed in the grease. The force upon the back side of the sealing disc is correspondingly small. The coupler is only lightly locked to the pin fitting. The bulging of the conduit is negligible. When, therefore, the advancement of the plunger of the grease gun is arrested, any accumulated pressure in the grease quickly dissipates itself by the flow of grease into the free bearing, whereupon the coupler can easily be disengaged from the pin fitting.

In the case of a "frozen" bearing, a high pressure must be developed in order to break a passageway or channel through the caked "gumbo" of the bearing. As soon as an opening has been broken through the dike, the grease flows easily into or through the bearing with a rapid dissipation of the accumulated grease pressure. When and if this pressure is in this way relieved substantially to zero, then again the coupler can easily be rotated upon the pin fitting in such a way as to disengage the bayonet slots.

Sometimes, however, the channel or passageway

which is broken through the caked "gumbo" of the bearing, still offers high resistance to the flow of grease. In such cases, the pressure which has been developed in the grease will persist after the forward movement of the plunger of the grease gun has been arrested. The persistence of this pressure is due largely to the tendency of the flexible conduit and the other parts to return to their normal size and shape after having been bulged and expanded to a slight degree due to the internal pressure of the grease.

In such cases, it is desirable, therefore, to relieve the grease pressure within the barrel of the pump and the conduit and the coupler before attempting to rotate the coupler to disengage it from the pin fitting. In the form of grease gun illustrated in the Gullborg patent, this relief of the pressure is almost instantly accomplished by rotating the screw threaded piston rod one or two turns in the reverse direction. This slight retraction of the piston or plunger of the grease gun enlarges the space within which the grease is confined, thereby reducing its pressure substantially to zero. Thereupon, the coupler can be easily rotated in such a was as to disengage the notches at the ends of the bayonet slots of the coupler from the ends of the cross pin of the fitting.

The "suction effect" of the coupler comes into play whenever the coupler is disengaged from the pin fitting and when, therefore, the spring 27 of the coupler is permitted to force the sealing disc 26 toward the outer end of the coupler in such a way as to enlarge the space behind the aperture in the sealing disc. It is the enlargement of this space due to the forward movement of the sealing disc 26 under the force of the associated spring 27 which tends to create a vacuum just back of the aperture of the sealing disc, thereby creat-

ing the suction which sucks back through this aperture, any blob of grease which would otherwise be left in or upon the exposed end of the pin fitting.

If, by the use of a pipe wrench the coupler could be rotated, and were rotated in such a way as to disengage its bayonet slots from the ends of the cross pin of the fitting at a time when the grease within the barrel of the grease gun and within the conduit leading to the coupler were under a very high pressure, then in all likelihood the enlargement of the grease confining space due to the forward movement of the sealing disc 26 would not be as great as the contraction of the confining space due to the return of the bulged walls of the conduit to their normal size and position. Under these circumstances, the *net* result of the disengagement of the coupler from the pin fitting would not be an enlargement of the space within which the grease is confined, but rather a contraction of this space. The effect of this decrease in the volumetric capacity of the grease confining space would be to eject some grease through the aperture of the sealing disc 26 at the moment of disunion.

If, however, the grease pressure within the barrel of the pump and in the conduit and coupler have been reduced substantially to zero, either by the easy flow of grease into the interstices of the bearing or by a slight retraction of the plunger of the grease pump, then the net result of the detachment of the coupler from the fitting is to enlarge the space within which the grease has been confined. This enlargement of the grease confining space due to the forward movement of the sealing disc 26 under the force of the compressed spring 27 tends to create the vacuum which gives rise to the "suction" of this "suction effect" coupler.

In all of the respects having to do with this "suction

effect" the Beezley form of Hollingshead coupler is identical with the coupler of the Gullborg patent. In all of the respects having to do with the conditions under which the suction can be developed to effect the automatic self-cleaning of the head of the pin fitting the Hollingshead apparatus is identical with that of the Gullborg patent. That is to say: In the Hollingshead apparatus, as in the Gullborg apparatus, when the grease flows easily into the interstices of the bearing, the grease pressure quickly dissipates itself when the forward movement of the pump plunger is arrested, whereupon the coupler can be detached from the pin fitting under a condition of no grease pressure; in the Hollingshead apparatus, as in the Gullborg apparatus, when a free channel for the flow of grease is broken through the caked "gumbo" of a bearing, the grease pressure quickly dissipates itself upon stopping the forward movement of the pump plunger, whereupon the coupler can be disengaged from the pin fitting under the condition of no grease pressure; in the Hollingshead apparatus, as in the Gullborg apparatus, when only a slight and high resistant channel is broken through the caked "gumbo" of a "frozen" bearing, then the grease pressure will persist after the forward movement of the pump plunger is arrested; in such cases it will be difficult, if not impossible, to disengage the notched ends of the bayonet slots from the projecting ends of the cross pin of the fitting unless and until the grease pressure is reduced substantially to zero.

We have pointed out how in the Gullborg apparatus this grease pressure can be reduced substantially to zero,—even in the case of a "frozen" bearing which continues to offer high resistance to the inflow of

grease, by a slight retraction of the plunger or piston of the grease gun.

We should like now to explain in more detail the construction and mode of operation of the grease pump part of the Hollingshead compressor, in order to show how, in the cases in which it becomes necessary to do so, the pump plunger may be retracted to relieve the grease pressure prior to the disconnection of the coupler from the pin fitting.

The Construction and Mode of Operation of the Grease Pump Parts of the Hollingshead Compressor.

The Hollingshead compressor sold to D. A. Beezley is in evidence as a physical exhibit (Plaintiff's Exhibit A, Beezley Affidavit). The accompanying Fig. 7 is a drawing of this Hollingshead compressor in conjunction with an Alemite pin fitting of the kind with which it was intended that the Beezley compressor should be combined in use. In this drawing the coupler and pin fitting parts are, because of their intricacy, shown in enlarged scale.

The Hollingshead compressor sold to Beezley is of a size and kind adapted for use in service stations and garages where many cars are to be greased daily. The pumping part is supplied with grease from a reservoir having a grease capacity of approximately five gallons. The pumping part receives grease from this reservoir and pumps it on toward the coupler under low pressures or under pressures running up to several thousand pounds per square inch, depending upon the resistance which a particular bearing may offer to the injection of grease.

The five-gallon grease reservoir is shown at R. It

is mounted upon a pair of wheels which rest on the floor. The reservoir can be wheeled about from car to car by grasping the upright handle A. A big pipe-threaded plug can be removed from the side of the reservoir, whereupon it is filled with fifteen or twenty pounds of grease. After the plug has been screwed back into the grease-filling hole, the tire inflating hose of an air compressor is connected with an air inlet at the top of the reservoir and compressed air is blown into the reservoir until a pressure of about one hundred pounds per square inch is attained. The air inlet opening is then closed and the air hose removed. The gauge shows at all time the amount of the continued air pressure in the reservoir, and consequently the pressure upon the grease in the lower part of the reservoir. A pipe leads upwardly from a point near the bottom of the interior of the reservoir through an open globe valve and thence through a flexible hose F to the hollow grease supply pipe of the high pressure pumping part of the compressor.

This high pressure pumping part comprises a barrel 15 in the form of a casting, having an upright cylindrical bore in which the plunger 16 may be moved up or down. This plunger 16 is reciprocated by the handle 18, which is pivoted at its end to the barrel casting 15 and at an intermediate point to the upper end of the plunger 16.

The pipe through which the grease is supplied from the reservoir R to the high pressure pumping element communicates through a port or opening with the interior of the barrel 15 some little distance above the bottom of the barrel. Another port leads substantially from the bottom of the barrel to the high pressure conduit 19 which leads in turn to the coupler shown at the middle of the left side of the drawing. The

coupler is here shown in an enlarged scale, as a result of which the drawing indicates a break between the left-hand end of the conduit 19 and the coupler. There is of course no such break in the actual device. It is to be understood, therefore, that the drawing represents a conduit 19 which leads directly and continuously to the upper end of the coupler.

The operation of this apparatus is as follows: When the plunger 16 is moved into its uppermost position by the handle 18, as shown in this Fig. 7, the force of the compressed air in the top of the reservoir R causes some of the grease G to flow upwardly through the pipe P and the flexible hose F to the inlet port of the pump barrel 15. The grease flowing in through this port more or less completely fills the pump barrel below the plunger 16.

Consequently, upon the downward movement of the handle 18, the plunger 16 is moved downwardly to a position in which it closes the inlet port of the barrel 15. At this stage of the operation the positions of the parts are as shown in Fig. 8. At this time the pump barrel 15 is filled with grease throughout the space beneath the lower end of the plunger 16.

A further downward movement of the handle 18 causes the reciprocating plunger 16 to move downwardly within the pump barrel 15 to force the grease out of the pump barrel and through the conduit 19 and into the bore 24 of the coupler. It will be noted that the diameter of the barrel 15 and the associated plunger 16 is very small, and that the handle 18 provides a large leverage. The result is that an easy push on the handle 18 will deliver grease through the conduit and coupler and pin fitting and on into the interstices of a bearing under pressures which in the case of a frozen bearing run up into the neighborhod of 10,000 pounds per square inch.

NORTHERN DISTRICT OF ILLINOIS
EASTERN DIVISION

THE BASSICK MANUFACTURING COMPANY) EQUITY
vs. NO.
MONTGOMERY WARD & CO. INC. and 5160
THE LAREIN AUTOMOTIVE PARTS CO.

Plaintiff's Exhibit No. 140

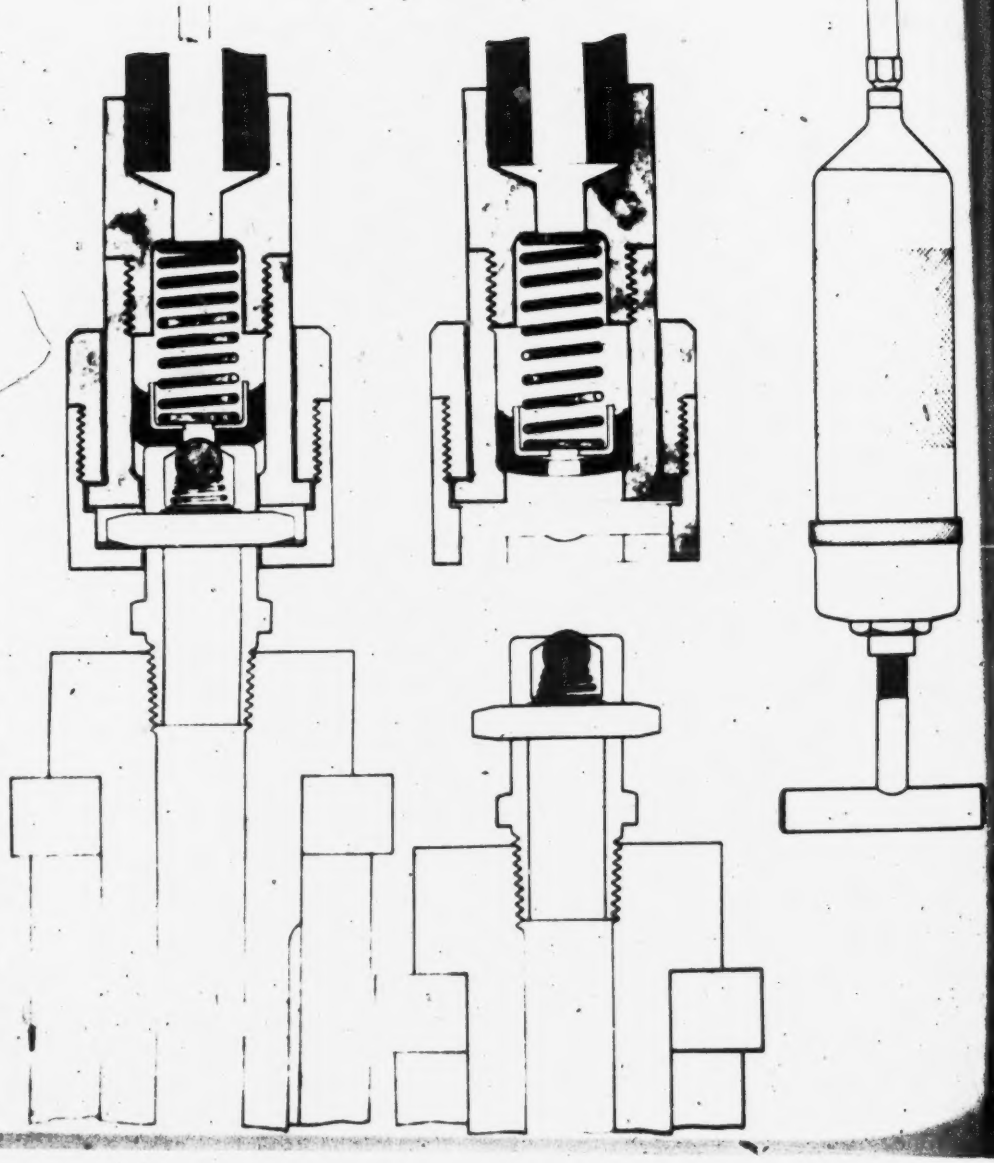

The Larkin Company's Coupler Before the 7th C C. A.

Opposite this page of this brief we have reproduced Plaintiff's Exhibit Chart No. 140, which appears at page 475 of the record in the case of *Larkin Automotive Parts Company et al v. Bassick*, in the Seventh Circuit Court of Appeals. The two volumes of this record were offered in evidence herein as Plaintiff's Exhibits Nos. 6 and 6-A, and are here as physical exhibits. This drawing illustrates the suction effect coupler manufactured and sold by the Larkin Automotive Parts Company. It was found to infringe by the Seventh Circuit Court of Appeals, 19 Fed. (2d) 944.

Adjacent the drawing of this Larkin equipment we have as Figure 3, reproduced the drawing with the addition of reference characters corresponding with those of the Gullborg patent.

As in the other instances, the left-hand view shows the coupler attached to the fitting. The conduit and the bore of the coupler are shown to be filled with grease. The sealing disc 26 is in the form of a cup leather; a spring 27 presses the cup leather 26 toward the shoulder 25.

When the coupler is detached from the pin fitting, as shown in the central view of Fig. 3, the spring 27 pushes the sealing disc 26 downwardly until it engages the shoulder 25, thereby enlarging the space within the bore 24 of the coupler. Here, as in the other instances, there is a tendency to produce a vacuum within the space above the sealing disc 26 and within the bore 24, because, as indicated in red in this central view, the grease cannot and does not fill the enlarged space which is created by the downward movement of the sealing disc upon the disconnection of the coupler from the pin fitting.

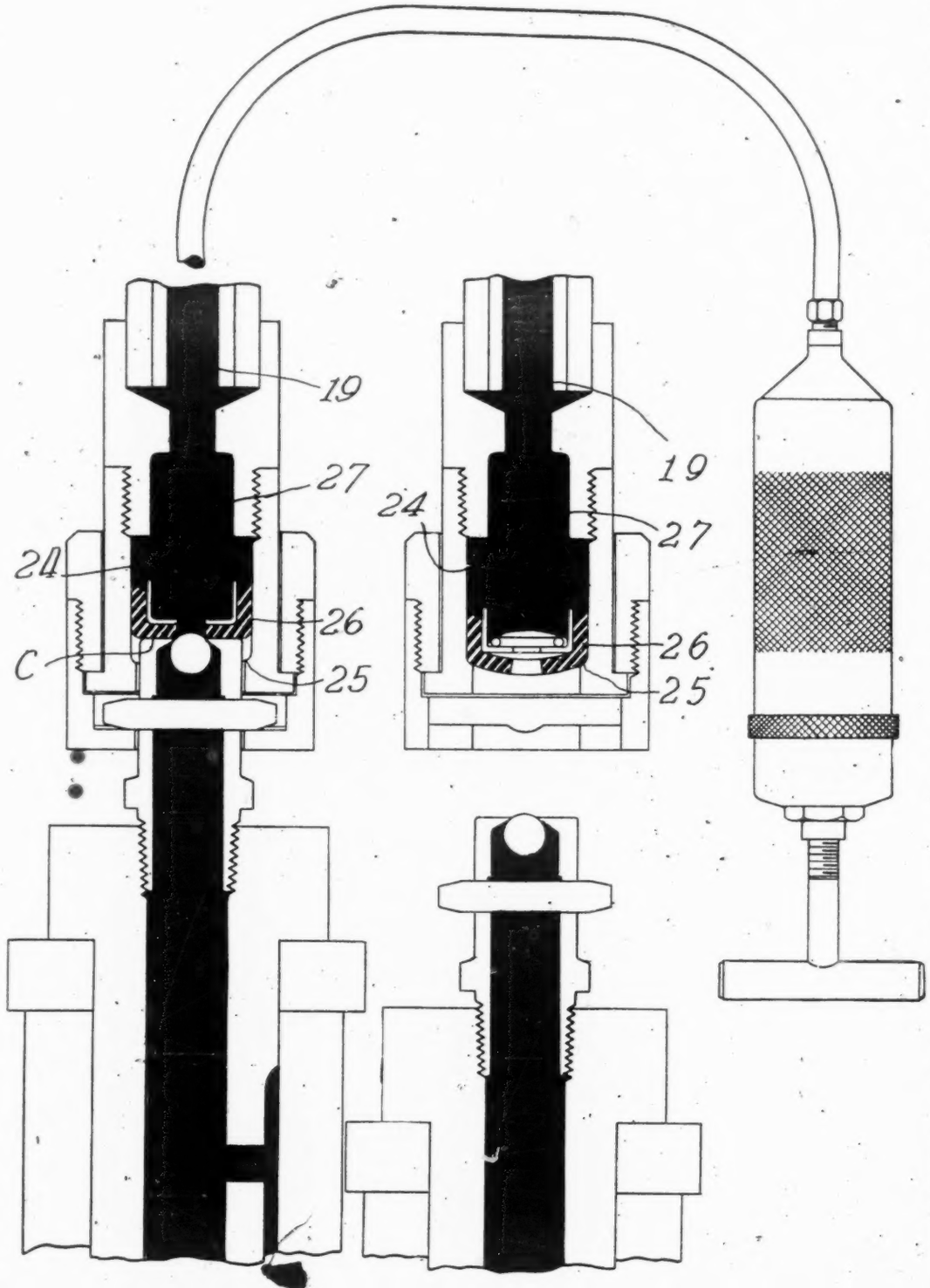

At the moment of disunion, "nature abhoring a vacuum" causes air under atmospheric pressure to rush in through the crevice at C, thereby carrying any excess lubricant from the head of the fitting into the space above the sealing disc 26 and within the bore 24 of the coupler.

A comparison of the drawing Figure 2 with the drawing Figure 3, shows that the device now held by the Sixth Circuit Court of Appeals *not to infringe* is *identical* with the device held by the Seventh Circuit Court of Appeals to infringe.

49

As the reciprocating plunger 16 is forced downwardly from the position shown in Fig. 8 to the position shown in Fig. 9, substantially all of the grease within the barrel 15 is forced out through the opening which leads from the bottom of the pump barrel into the conduit 19, and thence into the coupler, pin fitting, and bearing.

If the interstices of the bearing afford an easy passage for the grease, the pressure in the conduit 19 and the associated coupler will immediately dissipate itself by virtue of the outflow of grease into the bearing and, if need be, through the bearing to the outside. In such cases the coupler can at once be easily detached from the pin fitting by rotating the coupler relative to the pin fiitting in such a way as to disengage the bayonet slots of the coupler from the projecting ends of the cross-pin.

When under such circumstances the coupler is disengaged from the fitting, the sealing disc 26 will be moved downwardly under the expansive force of the associated spring 27 in such a way as to enlarge the space behind the aperture of the sealing disc. This downward or outward movement of the sealing disc tends to create a vacuum upon which a suction is developed to suck back, into the coupler behind the aperture of the sealing disc, the blob of grease which would otherwise remain on the exposed end of the pin fitting. In Fig. 7 the right-hand view of the coupler shows the conditions at the time of detaching the coupler from the pin fitting, and attempts, at least, to depict in graphic fashion, the void left in the space just above the sealing disc and into which the excess lubricant is retracted into the coupler at the moment of disunion.

We have considered the operation in the case of a bearing whose passages are free of caked "gumbo," or in the case of a bearing in which a large channel for the

flow of grease is at once opened upon the application of the requisite grease pressure.

Let us assume now, however, that the bearing to be lubricated is heavily caked with a hard incrustation of "gumbo". Let us assume also that this incrustation of gumbo resists the inflow of fresh grease to an extent such that a very high pressure is developed upon the downward movement of the reciprocating plunger 16. Let us assume also that even this great pressure of grease punctures only a very small and narrow passageway through the gumbo. Under these circumstances the grease will flow into the bearing but only by overcoming the great resistance of the narrow passageway which has been channeled through the grit in the bearing. Under these circumstances a considerable pressure will persist in the conduit 19 for several seconds, or perhaps even for several minutes, after the reciprocating plunger 16 has been forced to the lower end of the barrel 15.

If, during the persistence of this considerable pressure in the conduit 19 and the bore 24 of the coupler, it is attempted to remove the coupler from the pin fitting, it will be found almost impossible to disengage the notches of the coupler from the projecting ends of the cross pin of the fitting. And, as previously pointed out, if by the application of the brute force of a Stillson wrench the coupler were rotated sufficiently to disengage the notches of the bayonet slots, the contraction of the bulged walls of the conduit 19 would probably contract the grease confining space more than the downward movement of the sealing disc 26 would enlarge it. In such event there would be an extrusion of more or less grease through the aperture of the sealing disc 26, rather than a suction and retraction of grease back through this aperture to the interior of the coupler.

The high pressure pumping part of the Hollingshead compressor is, however, perfectly adapted to relieve the pressure which might otherwise persist in the conduit 19, and in such a way as to release the grip of the coupler upon the fitting and in such a way as to prevent the extrusion of grease at the moment of disunion. This relief of any pressure which under some conditions might persist in the conduit 19, is effected by a slight upward movement of the handle 18. After the handle has been fully depressed in such a way as to drive the plunger 16 to the bottom of the barrel 15 to force one charge of grease through the conduit 19, the handle 18 is raised from the position shown in Fig. 9 to the position shown in Fig. 10. This movement of the handle 18 causes an upward movement of the plunger 16 from the position shown in Fig. 9 to the position shown in Fig. 10. Upon this slight retraction of the plunger 16, any pressure in the conduit 19 and the associated coupler is immediately relieved by a back flow of the grease from the conduit 19 into the bottom of the barrel 15. This backward flow of grease from the conduit 19 immediately permits the bulged walls of the conduit 19 to resume their normal size and position, whereupon any pressure which may have existed in the grease within the conduit 19 and its associated coupler is immediately reduced to zero.

This relief of the pressure within the conduit 19 of the Hollingshead apparatus is effected in substantially the same way as is the relief of any persisting pressure within the conduit of the Gullborg apparatus as shown in the patent in suit. In both cases the relief of pressure is effected by a slight backward or retractive movement of the pumping plunger. The only difference is that in the one case the plunger is retracted by moving the handle to rotate the screw-threaded piston

rod within its nut, whereas in the other case the plunger is retracted by swinging the operating handle in a lever-like way about its fulcrum.

When any persisting pressure in the conduit 19 has been reduced to zero by this slight retractive movement of the reciprocating plunger 16, the associated coupler may easily be detached from the pin fitting with which it has been connected. Thereupon the forward movement of the sealing disc 26 under the force of the associated spring 27 will tend to create a vacuum, which causes a suction at the aperture of the sealing disc just at the moment of disunion to suck back into the interior of the coupler the blob of grease which otherwise would be left upon the head of the fitting.

The coupler of the Hollingshead apparatus may then be connected with another pin fitting of another bearing. Thereupon the handle 18 is moved to its uppermost position, as shown in Fig. 7, whereupon a fresh charge of grease is forced from the reservoir R through the flexible hose F into the barrel 15. As soon as this barrel 15 has in this way been filled, the handle 18 is again brought down to the position shown in Fig. 9, whereupon a charge of grease is forced into the second bearing.

This cycle of operations will of course be repeated until all of the chassis bearings of an automobile have been lubricated.

When all of the bearings of an automobile have been greased, the handle 18 should, in accordance with the instructions of the Hollingshead Company's advertising sheet, *supra* be left in its lowermost position, as shown in Fig. 9. If it were left in the upper position, as shown in Fig. 7, then the air pressure in the reservoir R would force a stream of grease through the pipe P, the flexible hose F, the inlet port of the barrel

15, the outlet port of the barrel 15, the conduit 19, and out through the aperture in the sealing disc 26 of the associated coupler. If the handle 18 and the associated plunger 16 were left in their upper position, as shown in Fig. 7, at a time when the associated coupler was not connected with any pin fitting, all of the five gallons of grease within the reservoir R would, in the course of an hour or so, be spurted out upon the floor through the aperture in the sealing disc 26. The globe valve in the pipe line PF may be closed at night so as to prevent the accidental occurence of such a catastrophe,—in grease.

It will be evident from the foregoing description that the Hollingshead apparatus can be operated in such a way as to secure the automatic cleansing of the head of the pin fitting upon *every* detachment of the coupler from a pin fitting, and regardless whether the grease pressure within the conduit 19 is relieved by an easy flow of grease through the interstices of the bearing or by a slight retraction of the recipricating plunger 15 just prior to the detachment of the coupler from the pin fitting. By a proper manipulation of the pumping element the pressure in the conduit 19 can be relieved prior to the disconnection of the coupler from the pin fitting, even in the case of the most tightly "frozen" bearing.

All of these things were easily and quickly demonstrated in the District Court with and by the physical Exhibit A, Beezley Affidavit. Very probably it was because these demonstrations were so complete and so conclusive that the Hollingshead Company did not, in connection with its first appeal, assign any error relative to the finding and holding of the District Court that the Hollingshead Company's sales of this compressor and "suction effect" coupler constituted a con-

tributory infringement of claims 1, 2, 3, 4, 5, 6, 8 and 10 of the Gullborg patent, and should therefore be enjoined.

It will be evident, however, that a man could, if he wished, misuse the Hollingshead apparatus in such a way as to cause grease to be spurted out onto the floor at the time of disconnecting the coupler from the pin fitting. This could be done in either of two ways.

(1) The coupler could be connected with a pin fitting screwed into a hole which had no outlet or which had only an extremely high resistance outlet for the flow of grease. The handle 18 could then be operated to pump up an enormous pressure in the conduit 19 and the associated coupler and pin fitting. At the conclusion of the pressure pumping operation, the handle 18 and the reciprocating plunger 16 could be left in their lowermost positions, as shown in Fig. 9. Then, without raising the handle 18 to relieve the pressure in the conduit 19 in the slightest degree, the coupler could by the application of sufficient brute force be rotated in such a way as to disengage the bayonet notches from the ends of the cross pin of the fitting, whereupon the coupler could be detached from the fitting. The walls of the conduit 19 would then collapse in such a way as to spurt grease out through the aperture in the sealing disc, and in such a way, obviously, as to prevent the "suction effect" from performing its cleansing function.

(2) A second way of misusing the Hollingshead apparatus in such a way as to cause grease to spurt out into the atmosphere upon the detachment of the coupler from the pin fitting, would be as follows: The coupler could be attached to a pin fitting connected, this time, either with a normally free and open bearing

or with an abnormally high-resistant bearing. The pump mechanism could then be operated to develop either a low pressure, in the case of the normal bearing, or a high pressure, in the case of a high-resistant bearing. In this case it would be essential, however, upon the completion of the pumping operation, to move the handle 18 and the reciprocating plunger 16 to their uppermost positions, as shown in Fig. 7. Then, upon the removal of the coupler from the pin fitting, there would be left an absolutely free and open passage for the flow of grease from the reservoir R on into the great outdoors. Under these circumstances the compressed air in the top of the reservoir R would force a stream of grease to flow up through the pipe P, the flexible hose F, the pumping barrel 15 (with both of its ports now wide open, because the handle and piston had been brought to and held in their uppermost positions), and thence through the conduit 19 and the hole in the end of the sealing disc 26. Under such manipulation of the apparatus, a stream of grease would be squirted out of the hole in the end of the coupler as long as one might choose to watch it, or at least until the five gallons of grease had been blown out of the reservoir R.

This misrepresentative use of the Hollingshead compressor could, indeed, be made without any pumping operation at all. Without having reciprocated the plunger 16 to deliver any grease whatsoever into the bearing of the connected pin fitting, the handle 18 could be brought to its uppermost position, as shown in Fig. 7, whereupon the coupler could be detached from the pin fitting. Thereupon the air pressure in the reservoir R could be relied upon to squirt a stream of grease out through the hole in the end of the sealing disc 26 in simulation of the play of a garden hose.

Either of these methods of misusing the Hollingshead apparatus would of course waste buckets of grease. Either method of misuse would make a grease-smeared mess of any automobile which might be subjected to it. Either method of misuse would soon convert any garage into a greasy quagmire.

If, on the other hand, the Hollingshead apparatus is used in the manner indicated in the Hollingshead advertising literature, and as more fully explained in the foregoing pages of our brief, the function of the "suction effect" coupler will come into play in such a way as to prevent the waste of grease, in such a way as to prevent the greasy ruination of both automobile and garage, and in such a way as automatically to remove from the head of each pin fitting the little blob of grease which would otherwise be left upon it at the time of detaching the coupler.

E.

The Error Urged By the Petitioner Lies in the Holding of the Sixth Circuit Court of Appeals That the Hollingshead Company's Sales of These Beezley Exhibit A Compressors Did Not Constitute a Contributory Infringement of Claims 1, 2, 3, 4, 5, 6, 8 and 10 of Gullborg Patent 1,307,734.

The error of the Sixth Circuit Court of Appeals appears in the following paragraphs of its opinion (Rec., pp. 603-604):

> "Considering first claims 1, 2, 3, 4, 5, 6, 8 and 10 of the Gullborg patent, it is apparent that no infringement exists. . . .
>
> "Each of the claims here under consideration is limited to a coupler having a suction effect, con-

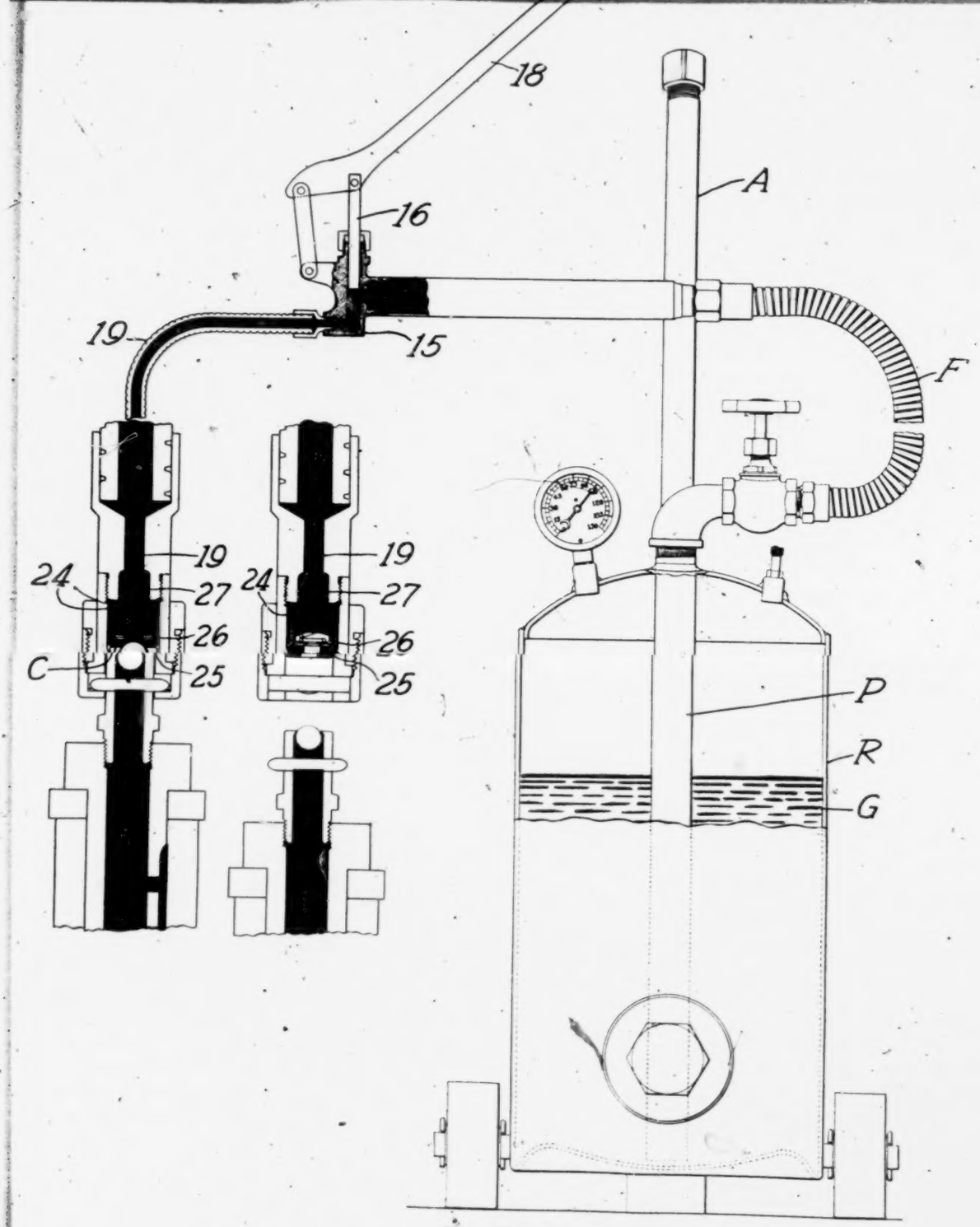

FIG. 7.

HOLLINGSHEAD'S "BEEZLEY TYPE COMPRESSOR".

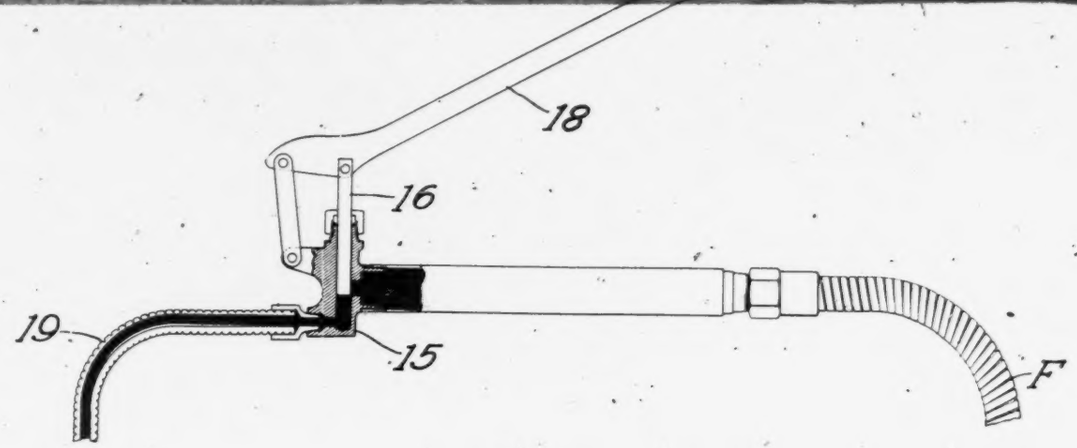

FIG. 8.

THE INLET PORT IS CLOSED.

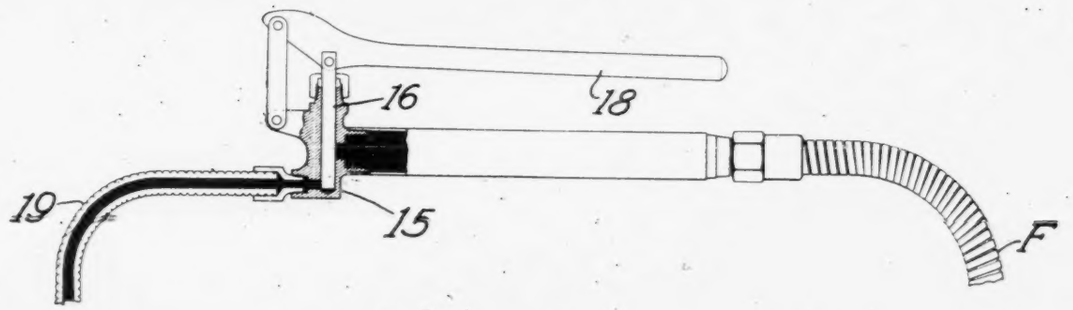

FIG. 9.

ALL OF THE GREASE IN THE BARREL HAS BEEN FORCED INTO THE CONDUIT 19.

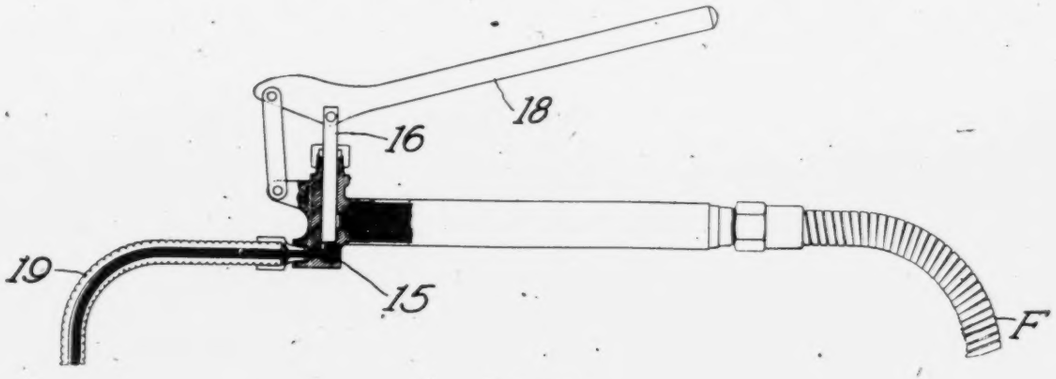

FIG. 10.

THE HANDLE 18 AND THE PLUNGER 16 ARE RAISED TO RELIEVE THE PRESSURE IN THE CONDUIT 19.

sisting of a perforated sealing disc slidably mounted, or other equivalent means. The accused device of appellant is the old and well known grease gun or compressor with a coupling means which contains no sliding disc or cup washer or any mechanical means for producing suction effect designed to remove excess lubricant. Such retraction of excess lubricant as was made to appear upon demonstration was slight and was apparently only that commonly incident to the movement of grease upon release of pressure. The accused structures therefore lack the vital element previously found essential for the validity of the several claims relied upon. To give them the breadth of construction necessary to find infringement would be to give to specific improvements in matter of form and structure a scope wholly unwarranted by any precedent."

F.

The Argument.

It strikes us that we can perhaps most fairly and completely summarize the gist of our argument by quoting verbatim the concluding paragraph of our brief in support of our petition for a rehearing in the Sixth Circuit Court of Appeals. In that petition and brief we said:

> "In the Structure of the Gullborg Patent in Suit, As in the Case of All of the Suction Effect Compressors Heretofore Held by This Court and by the Seventh Circuit Court of Appeals and by Scores of District Courts to Infringe the Suction Effect Claims of the Gullborg Patent No. 1,307,734, It Is Necessary to Relieve the Pressure Upon the Grease in Order to Secure the Advantages of the 'Suction Effect.'

"This matter was referred to in a foot note to the opinion of this Sixth Circuit Court of Appeals in the Lyman, Peerless, O. K., Larkin, Wag's, and Riggs cases, reported at 18 Fed. (2d) 29. Thus in foot note 4, the Court said:

> 'Of course, in order to allow this vacuum and suction to develop, any heavy pressure on the grease must be stopped, either by the check valve used in some forms, or by the release of the plunger pressure, or both; and if there is any failure in this relief the grease, perhaps after momentary retraction, will continue to exude.'

"In the case of the compressor sold by the appellant to Beezley it is just as necessary to relieve any heavy pressure upon the grease before detaching the coupler from the fitting as it is in the construction of the patent in suit and in all of the other constructions which have been held to be infringements of its suction effect claims. At the argument of this appeal, which occurred a year prior to the filing of the opinion on November 14, 1934, we demonstrated to the Court the manner in which the plunger of the defendant's pumping element must be retracted slightly in order to prevent the continued extrusion of grease upon the detachment of the coupler from the pin fitting.

"In view of the statement in your Honors' opinion of November 14, 1934, that in the defendant's compressor 'such retraction of excess lubricant as was made to appear upon demonstration was slight and was apparently only that commonly incident to the movement of grease upon release of pressure,' we are constrained to believe either (1) that at the time of the argument your Honors were not sufficiently familiar with the point in question to understand or to observe the demonstration of the suction effect cleansing action in the defendant's compressor which was sold to Beezley; or (2) that during the interval between the demonstration and the preparation of the opinion

your Honors forgot what had been demonstrated at the argument; or (3) that your Honors have confused the operation of the defendant's non-suction effect coupler (forming a part of the compressor sold to Cumming) with the operation of the suction effect coupler forming a part of the compressor sold by the Hollingshead Company to Beezley.

"The defendant, Hollingshead Company, took certain testimony to show that its Beezley type compressor *could* be operated in such a way as to destroy the utility of the suction effect. What the defendant did in this connection was in one way or another to apply or to maintain the application of a heavy pressure upon the grease in the conduit at the moment of disunion.

"Under such circumstances grease would of course be extruded at the moment of disunion and as a matter of fact would and did continue to be extruded for a long time after the disconnection of the coupler from the fitting.

"The fact, however, that this extrusion of grease at the moment of disunion was due to a deliberate misuse of the plunger mechanism of the gun was perhaps best demonstrated by the fact that when a sample of the plaintiff's 'Gullborg-Alemite coupler,' substantially identical with that of the Gullborg patent in suit, was substituted for the Hollingshead Company's coupler as a part of the gun sold to Beezley, the grease, under the defendant's misuse of the pump mechanism, was extruded at the moment of disunion precisely as it was when the Hollingshead coupler was used. Mr. Gibson, the defendant's expert witness, concluded his discussion of this matter at the bottom of page 209 of the record, where he said:

'The Gullborg coupler construction, such as the Alemite coupler, would not be capable of producing the (suction effect) function and result ascribed to it by Gullborg with a pump and

equipment of the type exemplified by defendant's exhibit No. 8-A, for the reason herein above stated.'

(Defendant's Exhibit No. 8-A having been claimed to be identical with the compressor sold by the Hollingshead Company to Mr. Beezley.)

"Nowhere in the Hollingshead Company's briefs has it been claimed that the Hollingshead coupler of the kind sold to Beezley was not or is not of the suction effect type. The Hollingshead Company's sole contention in regard to this matter was that the more strictly pumping part of the compressor was of a kind such that the grease pressure could not be relieved before the suction effect coupler was disconnected from the pin fitting.

"The fact is, however, that while the pump parts of the Hollingshead Company's gun can be operated in such a way as not to relieve the pressure, they can also be operated in such a way as to relieve the pressure. Such a relief of the pressure in the defendant's gun sold to Beezley was demonstrated to your Honors at the time of the argument.

"We should greatly appreciate an opportunity again to make this or similar demonstrations.

"The substantial identity between the compressor sold by the Hollingshead Company to Mr. Beezley and the suction effect compressors previously held by this court to infringe the suction effect claims of the Gullborg patent was so clear and unquestionable that upon its first appeal in this case the Hollingshead Company did not even assign as error the finding in the decree of the District Court that its sale was an infringement of the suction effect claims of the Gullborg patent. No assignment of error was based upon the part of the decree enjoining the defendant against the further sale of compressors of the Beezley type.

"In Conclusion Relative to the First Ground of this Petition for a Rehearing.

"The compressor sold by the Hollingshead Company to Mr. Beezley is a suction effect compressor substantially identical in its construction and mode of operation with that of the Gullborg patent in suit, and with that heretofore and now sold by the plaintiff, and with those heretofore held by this Sixth Circuit Court of Appeals and by the Seventh Circuit Court of Appeals (and by scores of District Courts throughout the country) to infringe the suction effect claims of the Gullborg patent in suit. Your Honors' opinion of November 14, 1934, is the only holding by any one of the many courts which have passed upon this Gullborg patent, that such a device as the defendant's Beezley type gun is not an infringement of the suction-effect claims of this Gullborg patent No. 1,307,734.

"We respectfully submit that your Honors' decision upon this phase of this case is based upon errors of fact and understanding.

"We most earnestly urge upon the Court to grant this petition and to afford us an opportunity to show and make such demonstrations as will convince your Honors of the errors upon which the opinion of the court dated November 14, 1934, is based.

"We did not in the trial of this case undertake to introduce the testimony of any expert witnesses. It was our opinion that the subject matter was simple, that the language was clear and unmistakable, and that the apparatus offered in evidence was sufficient in and of itself to demonstrate its construction and mode of operation.

"Furthermore, the unbridled employment of expert witnesses in patent cases has often been most emphatically condemned by the Federal Courts. *e. g.:*

David et al. v. *Harris,* 206 Fed. 902, 904, Second C. C. A. 1913. Opinion by Coxe, C. J.

Kohn v. *Eimer et al.*, 265 Fed. 900, 903, 2nd C. C. A. 1920. Opinion by Learned Hand, D. J.

Ball & Roller Bearing Co. v. *F. C. Sandford Mfg. Co.*, 260 Fed. 415, D. C. Conn. 1922. Thomas, D. J.

Marconi Wireless Tel. Co. of America v. *De-Forest Radio Telephone & Telegraph Co.*, 243 Fed. 560, 563, 2nd C. C. A. 1917. Opinion by Hough, C. J.

Safety Car Heating & Lighting Co. v. *Gould Coupler Co.*, 239 Fed. 861, 865, 2nd C. C. A. 1917. Opinion by Hough, C. J.

Hardinge Conical Mill Co. v. *Abee Engineering Co. et al.*, 195 Fed. 936, 940, 2nd C. C. A. 1912. Opinion by LaCombe.

Victor Talking Mach. Co. v. *Sonora Phonograph Corp.*, 221 Fed. 676, 677, D. C. S. D. N. Y. 1915. Mayer, D. J.

I. T. S. Rubber Co. v. *Essex Rubber Co.*, 270 Fed. 593, 605, D. C. Mass. 1920. Anderson, C. J.

American Stove Co. v. *Cleveland Foundry Co. et al.*, 158 Fed. 978, 985, 6th C. C. A. 1908. Opinion by Severens, C. J.

Sundh Electric Co. v. *General Electric Co.*, 204 Fed. 277, 279, 2nd C. C. A. 1913. LaCombe, C. J.

Fay v. *Mason et al.*, 127 Fed. 325, 333, 2nd C. C. A. 1903. Townsend, C. J.

Thomson-Houston Electric Co. v. *H. W. Johns Mfg. Co.*, 105 Fed. 249, 250, C. C. S. D. N. Y. 1900. LaCombe, C. J.

National Mach. Corp. Inc. v. *Benthal Mach. Co. Inc.*, 241 Fed. 72, 86, 4th C. C. A. 1916. Opinion by Pritchard, C. J.

Fried. Krupp Aktien-Gesellschaft v. *Midvale Steel Co.*, 191 Fed. 588, 3rd C. C. A. 1911. Opinion by Buffington, C. J.

"Still furthermore, at the time of the trial of the instant case the Gullborg patent in suit had been the subject of repeated litigations. Many of them had been the subject of appeals pending or disposed of by this very court of appeals.

"The Hollingshead Company on the other hand did introduce expert testimony. The arguments and the conclusions of the defendant's expert were in our opinion best answered by the devices themselves, which were in evidence as physical exhibits.

"The result is that we have had to rely and will have to rely in this case upon the court's examination and understanding of the physical exhibits. A demonstration of some of these exhibits completely refutes the contentions of the defendant's expert witness and will demonstrate the errors of fact upon which your Honors' opinion of November 14, 1934, is based.

"If your Honors' opinion in this present case is to stand, it means simply that the Hollingshead Company has the right to sell lubricating equipment substantially identical with that described in the patent in suit and substantially identical with that upon which the plaintiff's entire business has been built.

"Again let us say that we urge upon the court the propriety and as we see it, the necessity, for a rehearing."

The Defendant-Respondent's Contentions.

The gist of the respondent's contentions relative to the sole question raised by this writ of certiorari can be gathered from the following paragraphs (pages 8 and 9) quoted from the so-called appendix to respondent's brief in opposition to our petition for a writ of certiorari:

"The only evidence in the record (pages 196 to

199, inclusive, and pages 227 and 228 of record) is to the effect that respondent's large 'service' *grease-gun* is inherently of such a construction as makes it **impossible** to produce any so called 'suction effect' or 'self-cleansing' action in the coupler part of the *grease-gun* at the moment of disunion from the 'fitting' . . .

"The **only** *grease-gun* unit (a 'grease-gun' comprising generally a combination of a pump, a hose and a coupler) which respondent is charged to have sold to Beezley, is respondent's large 'service' type *grease-gun* unit exemplified by plaintiff's 'Beezley Exhibit A,' and also exemplified by Defendant's Exhibits 8 and 41, and the testimony of the expert (which was not controverted) is to the effect that the normal (and any possible) operation of this *grease-gun* unit produces a pressure in the coupler part many hundred times greater than the very slight amount of vacuum or 'suction' which could possibly be produced within the coupler element, and that this much larger *pressure cannot be relieved* prior to disunion, by virtue of the inherent construction and the inevitable mode of operation of this *grease-gun* unit, and that upon repeated applications of this *grease-gun* unit to so-called 'fittings' or grease-cups (and corresponding disunions), this respondent's *grease-gun* unit produced no 'suction' or 'self-cleansing,' but, on the contrary, produced a substantial exudation of grease upon each and every disunion."

(The emphasis is not ours, but that of respondent's counsel).

In Reply to the Defendant-Respondent's Contentions.*

1. The Testimony of the Hollingshead Company's Expert Witness.

This suit was brought and tried in the District Court for the Western District of Tennessee.

Prior to the trial, the defendant-respondent did something which was a little unusual, to say the least. Instead of having its principal witness (or indeed any substantive witness) appear at the trial in open court, it went to Philadelphia to take the deposition of a man named Hugo C. Gibson, who gave certain qualifications as an expert witness. Long prior to his deposition, the compressors sold by Hollingshead to Cumming and to Beezley had been filed as exhibits to the affidavits of Cumming and Beezley in support of a mo-

---

* It is at best a rather unpleasant duty to reply to such representations and "arguments" as are made by the present counselors for the defendant-respondent.

The circumstances of this case seem to us to make it only fair to everyone concerned to note that Mr. Charles Evan Hughes was retained by the Hollingshead Company to appear for it in connection with the Hollingshead Company's first appeal to the Sixth Circuit Court of Appeals, and in connection wth that appeal only. Upon that appeal counsel for the Hollingshead Company, including Mr. Hughes, expressly conceded by the previously quoted treatment of the defendant's assignment of error, the validity of claims 1, 2, 3, 4, 5, 6, 8, and 10 of the Gullborg patent, and conceded also the correctness of the holding of the District Court that the sale of the Beezley Exhibit A compressor constituted a contributory infringement of these claims of this patent.

Mr. Hughes was appointed to the bench of this court subsequent to the filing of the Hollingshead Company's brief in the Sixth Circuit Court of Appeals, but prior to the oral argument of that appeal. He promptly withdrew his appearance in this case and did not, of course, participate in the oral argument of it.

That first appeal was subsequently dismissed for the reasons stated in the opinion of the Court as reported at 50 Fed. (2d) 592, and 53 Fed. (2d) 470.

None of the contentions or arguments of non-infringement by the Hollingshead Company's sale of the Beezley type compressors were made during Mr. Hughes' connection with the Hollingshead case. All of these contentions and arguments were, for the first time, advanced in the Court of Appeals and in this Court after the appointment of Mr. Hughes as the Chief Justice.

tion for preliminary injunction. (Beezley and Cumming were present to testify at the trial, whereupon counsel for the defendant stipulated that their affidavits (Rec., pp. 19 and 26) as previously filed in support of the motion for preliminary injunction might be accepted in lieu of their oral testimony.)

Beezley Exhibit A, and Cumming Exhibit A, were never seen or examined by Mr. Gibson. He never testified regarding them, nor regarding any of the exhibits upon which the plaintiff's case was based. At the time of his deposition, Mr. Gibson was handed some pieces of apparatus, never identified by him, and never identified by anyone else.

Counsel for the defendant merely handed Mr. Gibson a piece of apparatus and adjusted the record to show this fact. Thus, on page 193 of the record, we find this:

> "Mr. Gibson was handed a piece of apparatus and stated that this apparatus consists of a container for holding lubricant, in the form of a cylinder having a piston and a plain piston rod and handle, a brush clutch upon the piston rod; the piston rod passing through a cover placed at one end of the cylinder. The piece of apparatus is a 'compressor' for lubricating parts of machinery and on the cover of the lubricant receptable member appear the words: 'Whiz High Pressure Grease Gun No. 20, R. M. Hollingshead Co., Camden, N. J.'"

After Mr. Gibson had discussed the construction and mode of operation of this unidentified piece of apparatus, it was offered in evidence as Defendant's Exhibit Nos. 6, 6-A, 6-B, and 6-C "all forming parts of defendant's hand compressor No. 6." (Rec., p. 194). The circumstances were the same in connection with

the various pieces of apparatus discussed by Mr. Gibson.*

If the apparatus discussed by Gibson is identical with that sold to Cumming and to Beezley, there is no point in our criticism as to its lack of identification. If it differs from the apparatus sold to Cumming and to Beezley, then there is point in our criticism.

We have not had a very good opportunity to examine critically the apparatus about which Mr. Gibson testified, and have not perhaps concerned ourselves very deeply in regard to its details of construction, for the reason that the case hinges upon the devices actually sold to Beezley and Cumming. Some of the arguments advanced by counsel for the respondent would lead one to suspect that some of the apparatus about which Gibson testified differs in some respects from the apparatus sold to Cumming and to Beezley. Furthermore, counsel for the respondent have for some reason clung very tenaciously to a constant and repeated reference to the Defendant's Exhibits as paralleling or duplicating the plaintiff's exhibits,—at least the plaintiff's exhibits as respondent's counsel claim them to have been when originally offered in evidence. Their final argument in the Court of Appeals was, as we shall see, based upon the contention that counsel for the plaintiff-petitioner had tampered with and corrupted the plaintiff's exhibits after they had been offered in evidence.

---

* We do not overlook the fact that Roderick W. Smith, a district sales manager of The R. M. Hollingshead Company was subsequently called as defendant's witness. The following is typical of his testimony: "The witness identified the device here in evidence as Defendant's Exhibit No. 8 as the high pressure chassis lubricator of The R. M. Hollingshead Co. It is a machine used for lubricating the chassis of an automobile with grease."

It certainly was nothing which the Hollingshead Company was selling at the time his deposition was given, because it was then, and had for a long time, been under a preliminary injunction not to sell equipment of this kind.

We suspect that counsel for the respondent still have it in mind to base their final arguments in this court upon some such unsupported charge of tampering and corruption, as was addressed to the Sixth Circuit Court of Appeals in the final reply argument of counsel for the respondent. This suspicion is based in part upon such statements and presentations as are made by counsel for the respondent in such paragraphs as the following, quoted from pages 1 and 2 of their brief in opposition to our petition for writ of certiorari. Counsel for respondent there say:

> "The respondent **never** sold *couplers*. It sold two (two kinds or types of grease guns) *grease guns;* one sold to Cumming and the other sold to Beezley. Duplicate specimens of each of these two *grease guns* is found in the record;—one specimen of each having been first introduced by defendant during the taking of dep[illegible] under the statute, and the other specimen having been subsequently introduced by plaintiff through affidavits introduced during the trial by stipulation."

Then follows an elaborate enumeration of the exhibit numbers of the things offered by the defendant and of the "(duplicate) specimens" offered by the plaintiff. The assertion that the defendant's specimens were first introduced and that the plaintiff's specimens were subsequently introduced would lead one to suspect that counsel for respondent urge, or will urge, that their specimens were the only "original and genuine" specimens and that the plaintiff's specimens were subsequent and unreliable upstarts. The fact of the matter is that the Beezley affidavit and exhibit were subscribed and sworn to on April 12, 1926 (Rec., p. 20) and filed with the clerk of the court in support of plaintiff's motion for preliminary injunction on October 29, 1926 (Rec., p. 19). The Cumming affidavit and

exhibit were subscribed and sworn to on September 13, 1926, and filed with the clerk of the court on October 29, 1926 (Rec., p. 26).

These Cumming and Beezley affidavits and exhibits have been a part of the court records ever since October 29, 1926.

On the other hand, the defendant's "specimens" were not marked or offered until January, 1928 (Rec., p. 276), and were not filed with the clerk of the court until December 31, 1928 (Rec., p. 187),—more than two years after the Beezley and Cumming affidavits and exhibits had been thus filed.

While we are upon this unpleasant subject, we had perhaps better finish it up:

Upon their second appeal, counsel for the Hollingshead Company had the opening argument in the Sixth Circuit Court of Appeals. In answer, we demonstrated the operation of the Beezley Exhibit A compressor and showed the perfect operation of its suction effect coupler precisely as described in the Gullborg patent. Then in his oral argument in reply, one of the counselors for the Hollingshead Company charged us with having removed from the Beezley Exhibit A a check valve in the passageway leading from the lower end of the barrel 15 to the conduit 19. There is such a check valve so located in the Cumming Exhibit A compressor,—quite a different form, as shown in the picture at record page 364-B, and terminating in a coupler of different form and different operation and regarded by us as a non-suction effect coupler (contributorily infringing, as we contend, the broader claims 14 and 15 only of the Gullborg patent).

In connection with this Cumming Exhibit A compressor, it had been the contention of defendant's expert, Mr. Gibson, that the check valve prevented any

back flow of grease from the conduit 19 and that the check valve therefore prevented any such relief of the pressure as might be necessary in some cases to enable a suction effect coupler to exhibit the advantages of its "suction effect" operation.

After the suction effect operation of the Beezley type A compressor had been demonstrated as a part of our oral argument in the Sixth Circuit Court of Appeals, counsel for the Hollingshead Company thought it best, apparently, to try to save the day by charging that we had removed such a check valve from the Beezley Exhibit A compressor, in order to demonstrate a suction effect upon disconnection of the coupler from a pin fitting. The following is a stenographic report of the colloquy which ensued:

> "Mr. Busser: (Counsel for The Hollingshead Co.) I don't like these demonstrations. I am not a mechanic; I am a lawyer. But Mr. Kalish tells me that in the demonstration of our Beezley exhibit there was a suction effect. He (Mr. Williams, counsel for The Bassick Co.) produced a suction effect. You remember he (Mr. Williams) admits that our first coupler does not have the suction effect but he (Mr. Williams) says the second does. In that exhibit (Beezley A), demonstrated to your Honors, this element (indicating a check valve) has been removed,—this element containing a check valve which would make it impossible for the coupler to have any suction effect.
>
> "Mr. Williams: That is not fair,—to charge us with changing these exhibits unless you have some evidence of it.
>
> "Mr. Busser: Isn't it a fact—
>
> "Mr. Williams: No.
>
> "Mr. Busser: —that that part was omitted?
>
> "Mr. Williams: No.
>
> "Mr. Busser: Not only that but this element

here is connected to a tank under a constant pressure of 150 pounds.

"Mr. Williams: Here it is—

"Judge Simons: We ought not to have this scene here.

"Mr. Williams: Here is the exhibit. It is marked. It was offered in 1926, and it has been in court ever since.

"Mr. Busser: I submit—

"Judge Moorman: Let the case be submitted."

This episode, as shown by the transcript, brought the last oral argument in the Sixth Circuit Court of Appeals to a close.

This charge of tampering with the Beezley Exhibit A has not as yet been made explicitly in this court. We shall not, therefore, pursue that phase of the matter further at this time.

As to the alleged presence of the check valve in the Beezley type compressor, counsel for the respondent do have the hardihood to say to this court in their brief in opposition to our petition for writ of certiorari, that the "evidence is clear to the effect that the **pressure** produced in the coupler element (either by the manual pumping operation or by the air pressure) **cannot be relieved** prior to disunion because the retraction of the pump piston has no appreciable effect on the pressure in the coupler part, because of the check valve which is intermediate the coupler part and the high pressure **reciprocatory-piston** (which check valve is a necessary element for the operation of all pumps of this 'reciprocatory' type), and because even if the check valve were removed (rendering the device thereafter inoperative and useless) and the piston then retracted, the air pressure of a hundred to two hundred pounds

would still be transmitted to the coupler part and that pressure alone is hundreds of times greater than the slight amount of vacuum that could possibly be produced within any coupler;—giving a net result of a substantial pressure instead of any 'suction.'" (Respondent's brief in Opposition to Petition for Writ of Certiorari, pages 10 and 11.)

The emphasis is not ours, but that of counsel for the respondent!

This assertion of the presence of a check valve in the Beezley type compressor as sold by the Hollingshead Company is indeed the last substantive paragraph of the respondent's brief in opposition to our petition. The assertion has no basis in the record,—neither in the testimony of any witness, nor in the iron and brass of the physical exhibit.

The Beezley Exhibit A compressor never did contain a check valve in the passage leading from the pump barrel 15 or anywhere in the conduit leading to the coupler. We can point to several things which indicate the truth of our statement in this regard:

(a) The reason why a slightly leaky check valve is incorporated in the outlet port of a grease gun of the Cumming Exhibit A type illustrated in the drawing on page 364-B of the record, is that there is no positive pressure to force grease from the reservoir into the pump barrel when the plunger reaches the top of its upstroke. There is no air pressure upon the grease in the reservoir as in the case of the Beezley type. It is desirable, therefore, to create some suction in the pump barrel 15 upon the upstroke of the plunger 16, so that grease will be *sucked* from the reservoir into the pump barrel at or about the conclusion of the upstroke of the piston. If some check valve or other re-

striction were not placed in the outlet port, then the suction caused by the upstroke of the plunger 16 would be satisfied by a return of grease to the pump barrel from the conduit leading to the coupler. If this suction were satisfied from that source or direction, a fresh charge of grease would not be drawn into the plunger barrel from the reservoir of the gun. All the operator could do would be to work the plunger up and down like the piston of an unprimed well-water pump, but without delivering any grease from the reservoir into the conduit leading to the coupler. In a compressor of the Cumming type, a slightly leaky check valve in the discharge port of the pump barrel 15 permits the development of a suction sufficient to draw grease from the reservoir into the pump barrel upon the upstroke of the plunger. The succeeding down stroke of the plunger will then of course deliver the newly sucked-in charge of grease to and through the conduit leading to the coupler.

As we have previously observed, however, the Beezley Exhibit A type of compressor has a reservoir R which, above the level of the grease, is filled with compressed air under a pressure of about 100 pounds per square inch. This air pressure in the reservoir is amply sufficient to force a fresh charge of lubricant into the barrel 15 of the pumping element whenever the bottom of the plunger is raised above the grease inlet port. In this compressor it is not, therefore, necessary to rely upon any suction caused by the upstroke of the plunger 16 to draw grease from the reservoir R into the barrel 15 of the pumping element. It is not necessary, therefore, to restrict the outlet from the pump barrel 15 to the conduit either by a check valve or otherwise.

A check valve at this place would, however, make it difficult, if not impossible, to relieve the pressure in the conduit preliminarily to the detachment of the coupler from the pin fitting. If the check valve were absolutely tight when seated, then the upward movement of the plunger 16 would not effect any relief whatsoever in the pressure in the conduit to the coupler. When, as is the practice in compressors of the suction supply type, a check valve is used in the discharge outlet from the pump barrel, it is made slightly leaky so that the retraction of the pumping plunger will relieve the grease pressure in the conduit. The relief of this pressure will, however, be slowed down to the extent to which the check valve seals the discharge opening. In other words, the relief of pressure will be slow. A little delay must therefore ensue before the coupler can be detached from the pin fitting.

Since, therefore, a check valve is unnecessary in the Beezley Exhibit A compressor where compressed air primes the pumping element with grease, and since even a leaky check valve slows down the relief of the pressure necessary to disconnect the coupler from the fitting, no check valve is used in the type of compressor exemplified in Beezley Exhibit A.

(b) None of the advertising and catalog illustrations of any of the compressors of the Beezley type shows or mentions the presence of any check valve. (See in addition to the catalog illustrations of the Hollingshead and Larkin compressors as incorporated in this brief immediately following page 30, the illustrations of the identical compressor as put out by the Frank Miller Co. (Rec., pp. 110-A and 110-B).

(c) In discussing the Cumming Exhibit A type of Hollingshead compressor, the defendant's expert, Mr.

Gibson, expounded at length relative to the check valve in the passage leading from the pumping barrel to the coupler conduit, claiming that this check valve prevented any relief in the grease pressure in the conduit, and asserting, therefore, that *this* Cumming type compressor was of a character which would not permit a suction effect coupler to function as such. When, however, Mr. Gibson came to discuss the Beezley type compressor, he made no mention whatsoever of the presence or deleterious action of any check valve. If there really were a check valve in the Beezley type compressor, Mr. Gibson certainly had the same reasons for gloating over its presence and its injurious effects as he had in the case of the Cumming type compressor.

If we turn now to page 193 of the record we find Mr. Gibson describing the Cumming type of compressor (Defendant's Exhibit No. 6) as follows:

> "This apparatus consists mainly of a grease receptacle, a lever piston pump, *a check valve,* a flexible hose and the coupler on the end of the hose."

We find him saying (Rec., p. 193) that

> "on the discharge end of that force pump appears *a check valve,* the operation of the pump as a whole being that the pump piston operated by the hand lever will draw grease or lubricant from the receptable and discharge it past *the check valve, this check valve* being essential to the operation of the lever pump which would be incapable of operation without *that check valve.* . . .
>
> "The pump would not operate without *that check valve* on its discharge end. It would be simply incapable of operation without it because that small pump piston depends for its supply of grease upon the closure of the discharge orifice. If that discharge orifice were not automatically closed by *a check valve* during the retracting mo-

tion of the piston, the charging motion of the piston, there would be no movement of lubricant grease from the receptacle to the cylinder of the hand lever pump. Consequently, that pump would be incapable of delivering grease at the desired pressure.

"If *the check valve* were removed and the pump piston operated, then, upon the charging stroke, that is, upon the withdrawal of the piston outwardly from its cylinder, there would be no vacuum created within the pump cylinder because that vacuum would be satisfied by the ingress of air, grease, or what not, through the passage which should be occupied and closed by *the check valve.*" Etc., Etc.

When Mr. Gibson came to describe the operation of this Cumming type compressor, he said (Rec., p. 194):

"There is no means whatever for relieving the pressure of the grease in the hose or coupler in this apparatus (marked:—Whiz High Pressure Grease Gun No. 20, R. M. Hollingshead Co., Camden, N. J.) because *the check valve* at the discharge orifice of the pump automatically prevents any possibility of relieving the pressure in the hose, and there are no means provided at all for that purpose. It would be impossible to relieve the pressure in the hose and coupler by any operation of retracting the piston of the hand lever pump or the follower piston of the receptacle; any movement of either of those pistons would have no effect whatever upon the pressure in the hose and coupler, due to the presence of *the check valve.*"

In order to make the argument that a compressor having Gullborg's suction type coupler does not infringe the Gullborg patent, if associated with a pump in which the pressure upon the coupler cannot be relieved, Mr. Gibson said further relative to the defendant's Cumming type of pump (Rec., p. 195):

"No self cleansing result or function can be produced by defendant's reciprocating type of pump (Exhibit No. 6-A)" *i. e.*, the Cumming type, "having *the check valve* at its discharge outlet, even if this pump is equipped with the Alemite hose and bayonet coupler instead of defendant's hose and bayonet coupler (Exhibits Nos. 6-B and 6-C) and the pump then operated by attachment in the only manner in which it can be operated upon attachment to the Alemite grease cup or fitting (Defendant's Exhibit No. 5).

"Defendant's pump (Defendant's Exhibit No. 6-A) would be incapable of any such vacuum or self cleansing function in the coupler *on account of the presence of the check valve* which is essential to the operation of the pump." Etc., etc.

The underlying basis for Mr. Gibson's argument was stated by him as follows (Rec., p. 195):

"The suctional function of the Gullborg coupler is limited to a type of pump which is so constructed, that the pressure produced by the pump during the act of lubrication can be entirely relieved prior to uncoupling from the grease cup, so that the cup washer of the Gullborg coupler may have an opportunity to function in a manner described in the Gullborg patent."

These somewhat limited quotations from Mr. Gibson's testimony must suffice to show that he relied heavily and almost exclusively upon the presence of the check valve in the Cumming type of pump to support his contention of non-infringement.

It should be interesting, therefore, to learn what Mr. Gibson had to say of the Beezley type of compressor as sold by the defendant, Hollingshead Company, and particularly to determine whether Mr. Gibson found in this Beezley type compressor any such check valve as had so greatly pleased him in the Cum-

ming type compressor,—any such check valve as counsel for the respondent have had the grace to charge us with having stolen out of the Plaintiff's Exhibit A of the Beezley affidavit some time after it was filed in evidence in 1926, and prior to its demonstration in the Court of Appeals on March 6, 1934.

In this instance we shall quote all that Mr. Gibson said regarding the construction of this Beezley type compressor:

> "The Alemite hose and the Alemite coupler were offered in evidence as Defendant's Exhibits Nos. 7B and 7C.
>
> "Defendant's large Service 'Compressor' was next submitted to Mr. Gibson. This service Compressor bears a label with the inscription:
>
> " 'Whiz high pressure chassis lubricant, the R. M. Hollingshead Co., Camden, N. J., U. S. A.'
>
> "This apparatus consists of a tank containing lubricant arranged for the application of air pressure for forcing lubricant out of the tank when required. A shut-off valve on the tank and a hose extending from the valve; a lever piston type on the end of the hose; a flexible metallic hose leading from the pump, and a coupler on the end of the flexible metallic hose. This apparatus in its entirety is referred to as a 'compressor.'
>
> "This last compressor is generally distinguished in the trade from the defendant's first compressor (Defendant's Exhibit No. 6) as a 'Service' or 'Garage type compressor', while the other is a portable or hand type compressor.
>
> "In the defendant's service compressor the lubricant contained in the tank is forced through the first hose to the lever piston type pump on the end of the hose by the air pressure in the tank, which is mounted at about 100 pounds per square inch.
>
> "*Without the air pressure the lever piston pump*

on the end of the first hose would not operate because no lubricant would be supplied to it.

"The air is supplied to the tank through a suitable valve similar to the valves used on automobile tires, and in a manner similar to placing air in tires."

There is not one word relative to any check valve!

In making this quotation from Mr. Gibson's testimony, we have italicized the sentence in which Mr. Gibson says that "Without the air pressure" (on the grease in the reservoir) "the lever piston pump on the end of the first hose would not operate because no lubricant would be supplied to it."

Mr. Gibson is here saying, in other words, precisely what we have said, namely, that the air pressure upon the grease in the reservoir forces the grease into the barrel 15 of the pumping element, whenever the plunger 16 reaches its uppermost position. When, furthermore, he says that without the air pressure the pumping element would not operate, "because no lubricant would be supplied to it," he is saying in effect that in this compressor there is *no* check valve to insure a suction upon the upstroke of the plunger piston 16 and no suction, therefore, which would operate to suck grease from the reservoir into the high pressure pump barrel.

These several reasons are, we think, sufficient to dispose of the final contention of respondent's counsel in the Court of Appeals that the suction effect operation of the Beezley Exhibit A compressor, which was admittedly there demonstrated, was due to some tampering and contemning theft of a check valve from the Beezley Exhibit A compressor by counsel for the petitioner.

We think these considerations should also dispose of any such contention, when and if it is more explicitly advanced in this Court.

2. THE ANSWER TO THE RESPONDENT'S REPRESENTATION THAT THE COMPRESSOR WHICH HOLLINGSHEAD SOLD TO BEEZLEY IS OF A CHARACTER SUCH "THAT THE NORMAL AND ANY POSSIBLE OPERATION OF THIS GREASE GUN UNIT PRODUCES A PRESSURE IN THE COUPLER PART MANY HUNDRED TIMES GREATER THAN THE VERY SLIGHT AMOUNT OF VACUUM OR 'SUCTION' WHICH COULD POSSIBLY BE PRODUCED WITHIN THE COUPLER ELEMENT, AND THAT THIS MUCH LARGER PRESSURE CANNOT BE RELIEVED PRIOR TO DISUNION." (Page 9, Respondent's Brief in Opposition to Petition for Writ of Certiorari.)

The respondent's argument is that although the compressor which it sold to Beezley terminated in a suction effect coupler like that described and claimed in the Gullborg patent, still the respondent associated it with a form of grease pump such that the suction effect coupler could not have its suction effect. The argument is further that even though the grease gun and coupler sold by the Hollingshead Company with the expectation and intention that they would be used in conjunction and combination with the Alemite pin fittings of the Gullborg patent, correspond in every detail with the claims of the Gullborg patent, still there is no contributory infringement because the defendant has rendered its suction effect coupler entirely useless as such by associating it with a grease gun of a character in which it is impossible to relieve the pressure in any way which will permit the suction effect coupler to function as such.

Counsel base this contention wholly upon some testimony given by their expert, Mr. Gibson, and upon a constantly reiterated misstatement of Mr. Gibson's testimony. They say, for example, on page 8 of their brief in opposition to the petition for writ of certiorari, that

> "The only evidence in the record is to the effect that respondent's large 'Service' grease gun is inherently of such a construction as makes it **impossible** to produce any so-called 'suction effect' or self cleansing action in the coupler part of the grease gun at the moment of disunion from the 'fitting.'" (The emphasis is that of Respondent's Counsel.)

Counsel refer in this connection to Mr. Gibson's testimony at pages 196 to 199 and pages 227 and 228 of the record.

Let us see what Mr. Gibson really did say and do. He said (Rec., p. 196):

> "The defendant's service compressor was then applied to an Alemite grease cup or fitting fixed to a spring bearing, by the attachment of the coupler of defendant's service compressor to said Alemite grease cup and the compressor was operated, forcing grease into and through the bearing."

This means that Gibson had forced the handle 18 and the plunger 16 down to their lowermost position, as shown in our Fig. 9 of this brief.

Mr. Gibson then says that

> "Upon uncoupling, a considerable quantity of lubricant was found both on the fitting or grease cup and in and around the coupler." (Rec., p. 196.)

What does this mean?

It means simply that Mr. Gibson had arranged his Alemite pin fitting in such a way as to prevent or as

greatly to restrict the free out-flow of grease from it into the bearing or its equivalent. Having provided against any relief of the pressure in this direction, he was particular also not to raise the handle 18 and the piston 16 from their lowermost position, as shown in Fig. 9, to an intermediate position such as shown in Fig. 10 (and particular also not to let the grease pressure effect this upward movement of the plunger 16), before he detached his coupler from the fitting. Mr. Gibson was of course doing one of the two things which might be done in a deliberate attempt to prevent the suction effect coupler from having or producing its "suction effect".

What next did Mr. Gibson do?

He says (Rec., p. 197):

> "The lubricating operation was again repeated with the fitting or grease cup and coupler cleansed, and prior to disconnecting the coupler from the grease cup, (~~and~~) the piston of the pump or compressor unit was retracted. Upon disconnecting the coupler from the grease cup the grease exuded and continued to exude from the coupler and deposited itself freely on the grease cup and elsewhere.
>
> "This last result is due to the fact that in defendant's 'service' type 'compressor' the lubricant is supplied or fed to the hand lever pump by the air pressure in the tank and the piston of the hand lever pump acts as a valve which shuts off the flow of lubricant from the tank when the piston is fully depressed. When the piston is retracted the air pressure in the tank can force the grease or lubricant through the pump and through and from the coupler."

What does this mean?

It means that in this second demonstration Mr. Gibson first operated the piston plunger 16 to force grease

to or into the pin fitting, and that he then deliberately moved the handle 18 and the plunger 16 into their uppermost position, as shown in Fig. 7 of this brief. Having gotten the plunger 16 into this uppermost position, and while continuing to hold it there, he detached the coupler from the pin fitting. The result was, of course, that the 100 pounds of compressed air pressure in the upper part of the reservoir R forced a stream of grease through the pipe P, the flexible hose F, and thence through the wide-open ports of the pumping chamber 15 to the conduit 19 and the coupler body 24, and thence "freely on the grease cup and" (as Mr. Gibson delicately puts it) "elsewhere."

Under these carefully prearranged conditions the grease would continue to be squirted out of the coupler into the "elsewhere" as long as the plunger 16 were held in its uppermost position and as long as there continued to be any available grease left in the reservoir R.

Not once did Mr. Gibson apply the coupler of his "specimen" of Hollingshead's Beezley type compressor to a pin fitting associated with a normally free bearing, in which case the pressure would be relieved through the bearing itself before the detachment of the coupler from the fitting. Not once did Mr. Gibson see fit, in connection with his plugged or tight bearings, to retract the handle 18 and the plunger 16 from the position shown in Fig. 9 to the position shown in Fig. 10 before detaching the coupler from the pin fitting.

He did not do these things in the way that every garage mechanic does them for the reason that he was bent upon preventing the "suction effect" coupler from having its effect. He was bent upon putting counsel for the Hollingshead Company in a position to enjoy

whatever element of concealment he might supply, when, saying, as they do, that the "uncontradicted evidence" shows

> "that respondent's large 'Service' grease gun is inherently of such a construction as makes it **impossible** to produce any so-called 'suction effect' or 'self-cleansing' action in the coupler part of the grease gun at the moment of disunion from the 'fitting'." (Page 8, Respondent's Brief in Opposition to Petition for Writ of Certiorari.)

(The bold-face emphasis is not ours, but rather that of counsel for the respondent.)

3. The Respondent's Argument That Mr. Gibson's Testimony Is "Uncontradicted."

What Mr. Gibson did was to tell a half truth. A half truth cannot perhaps be "contradicted." Mr. Gibson did not tell the whole truth. It is possible to tell the whole truth. The whole truth explains away the seeming effect of the half truth.

Mr. Gibson misused the respondent's Beezley type compressor in such a way as to prevent the suction effect coupler from performing its function as such. He was careful not to use the apparatus in its intended manner and in such a way as would have caused the suction effect coupler to produce its self-cleansing suction effect.

The Beezley Exhibit A compressor was in evidence and is in evidence. A mere understanding of it shows the fallacy of the deductions and arguments which counsel for the respondent base upon the "uncontradicted" testimony of their "expert" witness, Mr. Gibson. A moment's demonstration of the Beezley Exhibit A compressor is sufficient to show the untruth of counsel's assertions and contentions.

It was not, in our opinion, necessary to burden the courts with the testimony of any expert witness in reply to such testimony as that given by Mr. Gibson relative to such simple and quickly demonstrable apparatus as that which is here involved. It is still our hope that it should not be necessary to burden the records in patent suits with such "expert testimony" as has made the records in patent suits almost a byword.

Regardless whether the carefully chosen half truths of Mr. Gibson have been "contradicted," the assertions of counsel for the respondent, allegedly based upon this testimony, are contradicted by a mere understanding of the simple mechanism relative to which their contentions are advanced. Their contentions are contradicted by a moment's demonstration of the apparatus toward which they are directed.

4. Relative to Claims 14 and 15 of Gullborg Patent 1,307,734.

Claims 14 and 15 of the Gullborg patent are broader in their description of the coupler part of the combination than are claims 1, 2, 3, 4, 5, 6, 8 and 10. Claims 14 and 15 are, however, narrower than the other claims in their description of the pin fitting part of the combination.

Since, however, the pin fittings with which the Hollingshead Company admittedly intended their compressors to be used, incorporated all of the details of the pin fitting parts of the combination, as recited in claims 14 and 15, it is obvious that if the sales of the defendant's compressors constituted a contributory infringement of the narrower coupler claims, they must

have constituted also an infringement of the broader coupler claims.

In so far as the Hollingshead Company's Beezley type compressor is concerned, it is probably not a matter of much consequence whether its sales be regarded as an infringement of claims 1, 2, 3, 4, 5, 6, 8 and 10 only, or as an infringement also of claims 14 and 15. An injunction under the earlier claims will prevent further sales of this compressor just as effectively as would an injunction under the later claims also.

Claims 14 and 15 are more critically involved in the companion case of *Rogers et al.*, defendant-petitioner, vs. *Alemite Corporation*, plaintiff-respondent, which has been set for argument upon a writ of certiorari concurrently with the argument in this present case, and the same counsel appear on behalf of the plaintiffs and defendants in the two cases. It will conserve the convenience of everyone concerned, therefore, to discuss these claims 14 and 15 more particularly in conjunction with the *Rogers* case.

G.

In Conclusion.

We contend and submit:

That the coupler of the compressor sold by Hollingshead to Beezley was of the "suction effect" type, corresponding exactly with that of the Gullborg patent.

That the grease gun or pump parts of this compressor are of a character which makes it easy and natural to relieve the grease pressure whenever it is necessary to do so in order to detach the coupler from the associated pin fitting and to secure the advantages of the suction effect function of the coupler in every instance

regardless whether the pressure be relieved by the outflow of grease through the fitting, or by the retraction of the pumping plunger of the grease gun.

That the Hollingshead Company's sales of their compressors constituted a contributory infringement of the admittedly valid Gullborg patent.

Respectfully,

LYNN A. WILLIAMS,
ALBIN C. AHLBERG,
ELWOOD HANSMANN,
Counsel for Plaintiff-Petitioner,
2300 Board of Trade Building,
Chicago, Illinois.

FILE COPY

MAY 10 19

IN THE

Supreme Court of the United States

No. 872. October Term, 1934.

THE BASSICK MANUFACTURING COMPANY,
Plaintiff-Petitioner,

v.

THE R. M. HOLLINGSHEAD COMPANY,
Defendant-Respondent.

RESPONDENT'S BRIEF IN OPPOSITION TO PETITION FOR WRIT OF CERTIORARI.

FRANK S. BUSSER,
LEONARD L. KALISH,
Counsel for Respondent.

CHARLES N. BURCH,
Of Counsel.

I. F. Huntzinger Co., *Appellate Printers,* Camden, N. J.

IN THE

SUPREME COURT OF THE UNITED STATES

No. 872. October Term, 1934.

THE BASSICK MANUFACTURING COMPANY,
Plaintiff-Petitioner,

v.

THE R. M. HOLLINGSHEAD COMPANY,
Defendant-Respondent.

RESPONDENT'S BRIEF IN OPPOSITION TO PETITION FOR WRIT OF CERTIORARI.

SUMMARY.

Our opposition to this petition is based on the lack of any conflict of the decision of the Circuit Court of Appeals with any decision of any other Circuit Court of Appeals or (as alleged by petitioner) with its own earlier decision.

STATEMENT OF CASE.

The respondent **never** sold *couplers*. It sold two* *grease-guns*; one sold to Cumming and the other sold to Beezley.

*Two kinds or types of grease-guns.

Duplicate specimens of each of these two *grease-guns* is found in the record;—one specimen of each having been first introduced by defendant during the taking of depositions under the statute, and the other specimen having been subsequently introduced by plaintiff through affidavits introduced during the trial by stipulation.

The (duplicate) specimens of the *grease-gun* sold to *Cumming* are found in the record as:

Defendant's Exhibit 6, parts A, B and C,

and

Plaintiff's Exhibit A attached to Cumming affidavit.

The (duplicate) specimens of the *grease-gun* sold to *Beezley* are found in the record as:

Defendant's Exhibit 8, parts A, B, D and E, and Exhibit 41

and

Plaintiff's Exhibit A attached to Beezley affidavit.

Each of these two *grease-guns* (which for convenience may be designated as the "Cumming grease-gun" and the "Beezley grease-gun," respectively) includes or comprises a **reciprocatory-piston** type pump (or compressor), a hose and a bayonet type coupler.

The structural details of the coupler parts of these two *grease-guns* are somewhat different, as are the structural details of the pump parts.

Except as hereinafter qualified, we accept the following statement in Petitioner's brief (p. 18):

> "On behalf of the petitioner we have always asserted claims 1, 2, 3, 4, 5, 6, 8 and 10 to be limited to couplers of the 'suction effect' type. We adhere to that view. The Hollingshead Company has always entertained and expressed the same view. The opinion of the Sixth Circuit Court of Appeals entered November 14, 1934, is based upon and expresses the same view. Everybody concerned has, therefore, entertained

the same understanding of these claims, and still entertains the same understanding."

It will be noted that petitioner accepts the finding of the Circuit Court of Appeals that the *grease-gun* sold to Cumming, embodying (as is admitted by plaintiff) a "**non**suction-effect" coupler, does **not** infringe **any** of the claims;—even claims 14 and 15 which plaintiff-petitioner contended are not limited to this "suctional" feature, but which the Circuit Court of Appeals held must be so limited in order to be valid.

Petitioner's brief states (pp. 17 and 18):

> "The coupler sold to Cumming was not of the 'suction' type. * * * The other type of coupler,—sold by Hollingshead to Beezley had a 'suction-effect' coupler."

The Court of Appeals also found **as a fact** that the *grease-gun* sold to Beezley is likewise **not** possessed of the "suction-effect"; and, therefore, likewise does **not** infringe **any** of the claims.

This Court is asked to review merely this finding of fact. The finding was based on **uncontradicted** expert testimony* and upon the independent judgment of the Court as to the construction and mode of operation of the Beezley *grease-gun.*

As the petitioner's brief says (pp. 30 and 32):

> "The petitioner did not in the trial of this case undertake to introduce the testimony of any expert witnesses. * * * The Hollingshead Company, on the other hand, did introduce expert testimony."

What was the character of the Beezley *grease-gun* that persuaded the Court to accept the uncontradicted testimony of respondent's witness as to its mode of operation?

---

* On pages 196 to 199, inclusive, and pages 227 and 228 of the record.

It may be conceded*, as petitioner so elaborately argues in its brief, that the coupler part, *per se,* of the Beezley *grease-gun* would have been capable, **if combined with a pump of a different type,** of having a so-called "suction-effect." This is not in issue and therefore need not be disputed or considered. However, the clear and uncontroverted evidence showed, and respondent contended, that respondent's coupler is an integral part of a *grease-gun* in which the pump part is of the **reciprocatory-piston type,** and that in such combination the coupler could **not** have any "suction-effect."† The Circuit Court of Appeals so held.

Throughout petitioner's brief, petitioner takes the unwarranted liberty of assuming that respondent's alleged infringing structure is the coupler part of the Beezley *grease-gun* associated with a pump or compressor of the conventional **screw-actuated-piston** type shown in the patent in suit. Thus, in the foot note on page 20, petitioner states:

> "In all of these drawings the compressor part of the *combination* is shown in a conventional or diagrammatic manner." (Italics ours.)

But petitioner has no right to do this. The mode of operation of respondent's coupler part depends on the type of pump with which it is combined. There is no dispute that when respondent's coupler is combined with the peculiar and distinctive type of pump with which, in respondent's structure, it **is** combined, it does **not** and can **not** have the mode of operation which it conceivably might have in the purely *hypothetical* combination which the

---

* This is conceded merely for purposes of argument, but not admitted, because the evidence shows that **NO** "suction-effect" can be produced with the type of pump used by defendant-respondent in its **GREASE-GUNS** regardless of the construction of the coupler part.

† Regardless of the construction of the coupler per se.

petitioner, wholly without excuse, seeks to substitute for the actual combination* that respondent sold.

The petitioner wholly fails to show that in any other case decided by a federal appellate court the combination held to be an infringement of claims 1, 2, 3, 4, 5, 6, 8 and 10 was the combination which in the present case was held not to be an infringement of these claims.

In all other cases that have been decided in the federal appellate courts with respect to these so-called "suction-effect" claims 1, 2, 3, 4, 5, 6, 8 and 10, the pump was of such construction that the coupler could have a "suction-effect." In respondent's combination the pump is of such construction that the coupler could **not** have a "suction-effect."†

There is no dispute between the parties as to the proper construction of the claims. This Court is asked to review solely a finding of fact with respect to the mode of operation of a *grease-gun*‡ that was never involved in any other litigated case decided by a federal appellate court with respect to claims 1, 2, 3, 4, 5, 6, 8 and 10;—to which claims petitioner has expressly limited its petition for writ of certiorari.§

This Court is asked to review a finding of fact which accords with undisputed testimony as to mode of operation

---

* The GREASE-GUN sold to Beezley.

† Regardless of the construction of the coupler, per se.

‡ Pump, hose and coupler.

§ While NO appellate court has ever held a GREASE-GUN like the Beezley GREASE-GUN in the present case to be an infringement of the Gullborg "suction-effect" claims 1, 2, 3, 4, 5, 6, 8 and 10; the Circuit Court of Appeals for the Second Circuit in Bassick v. Adams, 52 Fed. 2d, 36, and the Circuit Court of Appeals for the Third Circuit in Rogers v. Alemite, 74 Fed. 2d, 1019, have held that "NON-suction-effect" GREASE-GUNS, (in legal effect the same as the Cummings GREASE-GUN and the Beezley GREASE-GUN in the present case) constituted contributory infringement of Gullborg claims 14 and 15. However, in the present case, plaintiff-petitioner has **ACCEPTED** the adverse decision of the Circuit Court of Appeals for the Sixth Circuit on this question of the scope and/or validity of claims 14 and 15, and has therefore **CONCEDED THE CORRECTNESS** of the decision of the Circuit Court of Appeals for the Sixth Circuit on this question, in the present case.

that was never submitted in any other case and that could not have been submitted in any other case.

The petition for rehearing of the decision of the Circuit Court of Appeals attacked precisely the same finding of fact which this Court is now asked to review.

We submit that this Court should not review a finding of fact as to the mode of operation of a construction that has never been involved in other litigated cases. Such finding of fact—whether right or wrong—does not, we submit, justify the petitioner in asking the Court to grant the writ.

In the event that the Court should deem it incumbent upon it to consider the correctness of this finding of fact, further reference may be made to the Appendix, in which the construction and mode of operation of respondent's grease-gun and the evidence relating thereto are discussed more in detail.

Respectfully submitted,

FRANK S. BUSSER,
LEONARD L. KALISH,
Counsel for Respondent.

CHARLES N. BURCH,
Of Counsel.

APPENDIX.

The petition for writ of certiorari proceeds in disregard of the clear and uncontroverted evidence in the case, and appears to be based merely upon counsel's repeated offer to substitute for the evidence in the record, some demonstrations* which counsel has devised outside the testimony adduced in the trial court, which demonstrations would not be subject to the essential safeguards of cross-examination and would clearly be *de hors* the record.

The Circuit Court of Appeals has **not** erred as to any question of fact involved in its opinion of November 14, 1934.

Petitioner, in its petition for writ of certiorari (just as in its earlier briefs and arguments before the Circuit Court of Appeals) endeavors to overcome the facts established by the clear and uncontroverted evidence in the record† by suggestions of new demonstrations and new mechanical theories and contentions evolved and presented solely by counsel subsequent to the trial of the case and not made a part of the record in the trial court.

Anent respondent's "Beezley grease-gun" and also exemplified by Defendant's Exhibits 8 (parts A, B, D and E) and 41‡:

The "Beezley *grease-gun*" is a sample of respondent's large garage type *grease-gun*, sometimes known as a

---

* Middle of page 32 of petitioner's brief.

† Pages 196 to 199, inclusive, and pages 227 and 228 of record.

‡ Parts A, B, D and E of Defendant's Exhibit 8 are the pump; short metallic hose; reservoir tank and long fabric hose parts, respectively, of the "Beezley GREASE-GUN";—while Defendant's Exhibit 41 is the coupler part of the "Beezley GREASE-GUN."

"service" *grease-gun*, a specimen of which was introduced during the taking of testimony (under R. S. 863), on behalf of respondent, as Defendant's Exhibits 8 (parts A, B, D and E) and 41.

The only evidence in the record* is to the effect that respondent's large "service" *grease-gun* is inherently of such a construction as makes it **impossible** to produce any so-called "suction-effect" or "self-cleansing" action in the coupler part of the *grease-gun* at the moment of disunion from the "fitting."

Petitioner in its argument first divorces the coupler part of respondent's *grease-gun* in question, from the pump part of such *grease-gun*, and then re-combines such divorced coupler part of respondent's *grease-gun*, with a totally different type of pump (which respondent is **not** charged with having made, used or sold), and then proceeds to argue that the so-called "suction-effect" or "self-cleansing" action *may* be produced in such **hypothetical** "combination" of the divorced coupler part of respondent's "service" *grease-gun* with the other kind of pump disclosed in the Gullborg patent.†

The Court need not consider (as it is no part of this present case) whether the coupler part of respondent's "service" *grease-gun*, in any **hypothetical** "combination" with a totally different kind of pump element (such as illustrated particularly in the drawings of the Gullborg patent in suit) would or would not be capable of producing the so-called "suction" effect or "self-cleansing" action, as respondent is not charged with having sold any such *grease-gun* "combinations" as **hypothetically** presented by petitioner in its petition and brief before this Court.

---

* Pages 196 to 199, inclusive, and pages 227 and 228 of record.

† Respondent has **NOT** been charged with any such **HYPOTHETICAL** "combination" and the record does not show that such **HYPOTHETICAL** "combination" ever had any real or potential existence.

The **only** *grease-gun* unit* which respondent is charged to have sold to Beezley, is respondent's large "service" type *grease-gun* unit exemplified by plaintiff's "Beezley Exhibit A," and also exemplified by Defendant's Exhibits 8 and 41, and the testimony of the expert (which was not controverted) is to the effect that the normal (and any possible) operation of this *grease-gun* unit produces a pressure in the coupler part many hundred times greater than the very slight amount of vacuum or "suction" which could possibly be produced within the coupler element, and that this much larger *pressure cannot be relieved* prior to disunion, by virtue of the inherent construction and the inevitable mode of operation of this *grease-gun* unit, and that upon repeated applications of this *grease-gun* unit to so-called "fittings" or grease-cups (and corresponding disunions), this respondent's *grease-gun* unit produced no "suction" or "self-cleansing," but, on the contrary, produced a substantial exudation of grease upon each and every disunion.

Therefore, in holding that the "suctional" or "self-cleansing" claims 1, 2, 3, 4, 5, 6, 8 and 10 of the Gullborg patent in suit were **not** infringed by either of the two respondent's *grease-guns*, the Circuit Court of Appeals decided wholly in accordance with all the evidence in the case.

In this connection, it may be noted that the pump part or element of each of the *grease-guns* held by the same Appellate Court to constitute infringements (of the "suctional" or "self-cleansing" claims) in all the cases decided in *Lyman, et al., v. Bassick,* 18 Fed. (2d) 29, were the kind of pumps by or through which the pressure could be relieved prior to disunion and which therefore did afford

* A "grease-gun" comprising generally a combination of a pump, a hose and a coupler.

opportunity for the development of the so-called "suctional" or "self-cleansing" effect in the coupler part of these *grease-gun* "combinations" at the moment of disunion. This is not so, however, in respondent's "service" type *grease-gun* unit sold to Beezley.

Thus, in all the cases before the Circuit Court of Appeals in *Lyman, et al., v. Bassick* (18 Fed. (2d) 29), as well as in counsel's **hypothetical** "combination" upon which petitioner's petition for writ of certiorari is based, the pump part of the *grease-gun* unit was and is of the conventional **screw-advanced-piston** type of pump (of the same kind as disclosed in the Gullborg patent in suit) wherein **no check-valve** (a one-way valve) is necessary for the operation of the pump, and wherein the pressure *may* therefore be relieved prior to the disunion of the coupler element (of the *grease-gun*) from the "fitting" by merely retracting the **screw-advanced-piston** by turning the screw-handle back a turn or so.

On the other hand, however, the pump element of respondent's "service" type *grease-gun* unit, is of the type wherein the grease is successively subjected to two different pressures (successively increasing). The low pressure is produced by a hundred to two hundred pounds of air constantly maintained on the grease supply (in the large tank which rests on the floor) while the high pressure is produced by a **reciprocatory-piston** operating within a cylinder (connected with the tank through a long hose about 1½ inches thick).

The evidence is clear to the effect that the **pressure** produced in the coupler element (either by the manual pumping operation or by the air pressure) **cannot be relieved** prior to disunion because the retraction of the pump piston has no appreciable effect on the pressure in the coupler part, because of the check-valve which is inter-

mediate the coupler part and the high-pressure **reciprocatory-piston** (which check-valve is a necessary element for the operation of all pumps of this "reciprocatory" type) and because even if the check-valve were removed (rendering the device thereafter inoperative and useless) and the piston then retracted, the air pressure of a hundred to two hundred pounds would still be transmitted to the coupler part and that pressure alone is hundreds of times greater than the slight amount of vacuum that could possibly be produced within any coupler;—giving a net result of a substantial pressure instead of any "suction."

CONCLUSION.

It is, therefore, apparent that the Circuit Court of Appeals did **not** err on any question of fact as shown by the record, but that the alleged question of fact which petitioner again attempts to raise by its petition for writ of certiorari is not a question of fact at all, but merely concerns a hypothetical device or a hypothetical "combination" and possibly some new demonstrations, new mechanical theories and contentions, presented or advanced for the first time since the trial and never presented in the lower court through evidence, and is wholly *de hors* the record, and that the petition for writ of certiorari must, therefore, be denied for the additional reason that it is without foundation in the record.

Respectfully submitted,

FRANK S. BUSSER,
LEONARD L. KALISH,
Counsel for Respondent.

CHARLES N. BURCH,
Of Counsel.

FILE COPY

IN THE

Supreme Court of the United States

No. 23. **October Term, 1935.**

THE BASSICK MANUFACTURING COMPANY,
Plaintiff-Petitioner,

v.

THE R. M. HOLLINGSHEAD COMPANY,
Defendant-Respondent.

Brief on Behalf of Defendant-Respondent.

FRANK S. BUSSER,
LEONARD L. KALISH,
Counsel for Defendant-Respondent.

International, 236 Chestnut St., Philadelphia

INDEX.

	Page
STATEMENT OF THE CASE	1
THE COURT OF APPEALS DID NOT ERR IN HOLDING THAT THE SALE OF GREASE GUNS OF THE EXHIBIT A BEEZLEY TYPE DID NOT INFRINGE THE GULLBORG PATENT IN SUIT	4
CLAIMS 14 AND 15, IF CONSTRUED AS NOT LIMITED TO A GREASE GUN WHOSE COUPLER HAS A SUCTION EFFECT, ARE INVALID	14
CONCLUSION	43

TABLE OF CASES.

	Page
Alemite v. Lubrair, 62 Fed. (2d) 899	39, 41
Backstay Co. v. Hamilton, 262 Fed. 411	29
Backstay Co. v. Zenite Co., 293 Fed. 23	30
Carbice Corporation of America v. American Patents Development Corporation, 283 U. S. 27	24
Cortelyou v. Charles Eneu Johnson & Co., 145 Fed. 933	31
Cortelyou v. Charles Eneu Johnson & Co., 138 Fed. 110	31
General Electric Co. v. Ohio Brass Co., 277 Fed. 917	25
Harvey-Hubbell v. General Electric Co., 267 Fed. 564	32
Heald v. Rice, 104 U. S. 737	23
In *ex parte* Campbell, 18 Gour. 6-12	37
In *re* McNeil, 1902 C. D. 563; 100 O. G. 2178; 20 App. D. C. 294	28
In *re* McNeil, 100 O. G. 2178; 20 App. D. C. 294	36
In *re* McNeil, 1902 C. D. 313; 100 O. G. 1976	37
In *re* Ratican, 1911 C. D. 267	27
In *ex parte* Wigginton, 279 O. G. 729	35
Langen v. Warren Axle & Tool Co., 166 O. G. 986	26
Leeds and Catlin v. Victor Talking Machine Co., 213 U. S. 301	33, 37, 38, 39
Lyman *et al.* v. Bassick, 18 Fed. (2d) 29	38
McBride v. Kroder, 21 Gour. 84-89	36
Morgan Envelope Co. v. Albany Perforated Wrapping Paper Co., 152 U. S. 425	24
Palmer Pneumatic Tire Co. v. Losier, 90 Fed. Rep. 732	36
Radio Corporation v. Lord, 28 Fed. (2d) 257	28
The Edison Electric Light Company *et al.* v. Peninsula Light, Power & Heat Company *et al.*, 101 Fed. 831	33
Troy Wagon Works Co. v. Ohio Trailer Co., 274 Fed. 612	31
Underwood v. Gerber, 149 U. S. 224	23, 32
Warner Typewriter Co. v. Webster Co., 144 Fed. 405	30
Wall Pump & Compressor Co. v. Gardner Governor Co., 28 F. (2d) 334	32

IN THE

Supreme Court of the United States.

No. 23. October Term, 1935.

THE BASSICK MANUFACTURING COMPANY,
Plaintiff-Petitioner,

v.

THE R. M. HOLLINGSHEAD COMPANY,
Defendant-Respondent.

BRIEF ON BEHALF OF DEFENDANT-RESPONDENT.

STATEMENT OF THE CASE.

The writ of *certiorari* allowed in this case brings before this Court for review a part of the decree of the Circuit Court of Appeals for the Sixth Circuit. The decision of this Court is printed on pages 601 et seq. of the record and is reported in 73 Fed. (2nd) 543.

The issues before the Circuit Court of Appeals were the following:

Was defendant-respondent guilty of contributory infringement of the Gullborg patent No. 1,307,734?

Was the defendant-respondent guilty of contributory infringement of the Zerk patent No. 1,745,980?

The Court of Appeals held that defendant-respondent infringed neither patent.

Infringement of the Gullborg patent was based on the sale by defendant-respondent of two types of grease-guns, one illustrated in Plaintiff's Exhibit A attached to the Cumming affidavit (Rec. p. 26) and in Defendant's Exhibit 6, parts A, B and C, and the other illustrated in Plaintiff's

Exhibit A attached to the Beezley affidavit (Rec. p. 19) and Defendant's Exhibit 8, parts A, B, C, D and E. The Court of Appeals decided that the sale of neither of these two types of grease guns involved infringement of the Gullborg patent.

Petitioner did not, by its petition, bring before this Court for review that part of the decision which holds non-infringement of the Zerk patent. Nor did the petitioner bring before this Court for review that part of the decision which holds that the sale of the first type of grease-gun above specified does not infringe the Gullborg patent.

The sole question brought before this Court for review is whether the sale of the second of the above specified grease-guns is a contributory infringement of the Gullborg patent. (Specification of Errors, p. 34, Brief in support of Petition for Writ.)

At the hearing before the Circuit Court of Appeals the parties were agreed that, assuming the validity of claims 1, 2, 3, 4, 5, 6, 8 and 10, they were all limited to grease guns in which the coupler has in operation a "suction effect". The plaintiff-petitioner contended that claims 14 and 15 were broad enough to cover the combination with the specific grease-cup defined therein of any grease gun capable of pumping grease into such grease-cup. Defendant-respondent contended that if claims 14 and 15 were thus broadly construed they were invalid. The Court held that claims 14 and 15, as well as the other claims in suit, were limited to a grease gun in which the coupler has in operation a "suction effect".

That part of the decision of the Court of Appeals which construes claims 14 and 15 as limited to a grease gun whose coupler has a "suction effect" is not brought before this Court for review.

In the petition for writ of *certiorari* and in the brief now on file, plaintiff-petitioner apparently accepts the decision of the Court of Appeals as to the scope of claims 14 and 15 of the Gullborg patent. *The sole question raised in the petition and in the brief is a question of fact,* namely, whether the coupler of the second of the two above-named grease guns of defendant-respondent has in operation a "suction effect".

If claims 14 and 15 should be construed literally and, therefore, as sufficiently broad to cover the combination, with the specific grease-cup defined in those claims, of any old grease gun, and if these claims so construed be valid, and if the sale of any old grease guns adapted to function to pump grease into such grease cup would be a contributory infringement of the Gullborg patent, then it would become unnecessary to determine whether the Exhibit A Beezley type of grease gun has a coupler which in operation has a "suction effect", since, whether it has or not, the sale of such a grease gun, and indeed also the sale of the Exhibit A Cumming type of grease gun, would be a contributory infringement of claims 14 and 15.

However, that part of the decision which holds that none of the claims of the Gullborg patent is infringed by the sale of grease guns of the type identified herein as Exhibit A Cumming affidavit is, as above stated, not brought before the Court for review.

Nor does plaintiff-petitioner allege in its petition or in its brief that claims 14 and 15, as well as the other claims of the Gullborg patent, are not limited to grease guns having couplers which in operation have a "suction effect". The only allegation of error contained in the petition for writ is that the Court erred—

> "In finding that claims 1, 2, 3, 4, 5, 6, 8, 10, 14 and 15 of the Gullborg patent No. 1,307,734 were not infringed by the Hollingshead Company's sale of lubricant compressors and suction effect couplers of the type identified herein as Exhibit A, Beezley affidavit."

The first question that we will discuss, therefore, is whether the Court was in error in its finding of fact that the coupler of the grease gun of the Exhibit A Beezley type had in operation a "suction effect".

Plaintiff-petitioner may contend (although there is no indication of that in his brief) that he is entitled to urge that claims 14 and 15 are not limited to grease guns whose couplers have a "suction effect". We submit that there is no allegation of error that permits plaintiff-petitioner to take that position. In case, however, that this Court should hold that plaintiff-petitioner is entitled to urge alleged errors of the Court not specified in the petition or discussed in the brief, we devote one chapter of this brief to a discussion of the scope and validity of claims 14 and 15.

The Court of Appeals Did Not Err in Holding That the Sale of Grease Guns of the Exhibit A Beezley Type Did Not Infringe the Gullborg Patent in Suit.

The Gullborg patent in suit, No. 1,307,734, relates to an old art in which any ordinary pump or compressor or so-called *grease gun* is used to force grease into a *grease-cup* or "nipple" or "fitting" communicating with the bearing of any machine, for example, an automobile. The two articles are not sold in combination but separately. The defendant-respondent sells only grease guns.

The plaintiff-petitioner is the owner of patent No. 1,307,733 (Record p. 453) not in suit, for a grease-cup which

differs slightly from older grease-cups in that the old bayonet projections, extending laterally on opposite sides of the grease-cup and adapted to be engaged by the bayonet joint of the coupler element of the grease-gun, are formed by a pin which extends transversely through the grease-cup and affords a seat for the valve-closing spring of the grease-cup.

The invention of the patent in suit has been held by the courts to be an improvement in the old grease-gun; the improvement comprising a coupler element which in operation has a "suction effect", namely, the capacity, upon its detachment from the grease-cup, of sucking in grease that would otherwise adhere to the exposed outer end of the grease-cup.

Of the claims in issue of the patent in suit, claims 1, 2, 3, 4, 5, 6, 8 and 10 claim the improved grease-gun in combination with a part to be lubricated, all of the claims specifying such part in terms broad enough to include *old* grease-cups. Claims 14 and 15 (literally construed) claim the specified grease-cup of patent 1,307,733 in combination with *any* old grease gun.

The capacity of the grease-gun to perform this "suction effect" depends on two factors: namely, (1) the capacity of the sealing-disc member of the coupler that abuts against and seals against the end of the grease-cup, to advance slightly upon the detachment of the coupler from the grease-cup and create a slight suction or partial vacuum within the coupler and (2) the substantially complete release of the pressure upon the grease within the hose and coupler of the grease-gun before the detachment of the coupler from the grease-cup.

That both such factors must co-exist to maintain the charge of infringement is clear from the petitioner's brief. (See, for example, page 55.)

In the petition for the writ and the brief in support thereof, the contention of infringement by the Hollingshead large service compressor (Plaintiff's Exhibit A attached to Beezley affidavit (Rec. p. 19), and Defendant's Exhibit 8, parts A, B, C, D, E (offered p. 197, Rec.)) was based, not upon defendant-respondent's actual grease-gun, but upon a hypothetical construction (see opposite page 20 of the petition) comprising defendant-respondent's coupler associated with a pump which was operable to satisfy the second of the two specified factors necessary to support infringement.

In our reply brief, we asserted that the petitioner was without right to do this and maintained that in the actual defendant-respondent's large service compressor, namely, the Hollingshead grease-gun as represented by Plaintiff's Exhibit A attached to the Beezley affidavit and Defendant's Exhibit 8, parts A, B, C, D and E, the second of the specified factors necessary to support infringement did not exist.

The plaintiff-petitioner, in the present brief, abandons his case on the hypothetical grease gun and endeavors to demonstrate that the actual Hollingshead grease-gun satisfies both requirements.

The question in dispute is, therefore, *solely a question of fact*, namely, whether Hollingshead large service "compressor" or large service type grease-gun has the "suction effect".

The only testimony on this point in the case is that submitted by defendant-respondent. Record, pp. 196-7. While this testimony is that of an expert, it comprises not wholly or mainly expressions of opinions but consists largely of statements of fact, one of which is that in the operation of defendant's grease gun the coupler has no suctional effect whatsoever. No testimony was submitted by the plaintiff in

contravention or qualification of defendant's testimony. The appellate court presumably gave weight to this undisputed fact testimony and found as a fact that "such retraction of excess lubricant as was made to appear upon demonstration [by Mr. Williams] was slight and was apparently only that commonly incident to the movement of grease upon release of pressure". (Rec. p. 604.) The attention of the Court of Appeals was expressly directed to this alleged error of fact in plaintiff's petition for rehearing (Rec. p. 614), and in denying that petition it must be assumed that the court gave the matter its particular consideration.

So far as can be gathered from a study of plaintiff-petitioner's brief, it is not alleged that any grease gun the same as Beezley A or Defendant's Exhibit No. 8 was ever involved in any other contested or reported suit against any other defendant in which infringement was decreed as a result of a full trial of the issues, but only that the coupler element thereof was involved in such other suits (in conjunction with a different kind of pump). However that may be, the question whether, in the operation of this (defendant-respondent's) grease-gun, the coupler has a "suction effect" must be decided by the evidence *in this case*. The evidence is that it does not have a "suction effect" and such evidence is uncontradicted. The decision of the Court of Appeals made a finding of fact in accordance with that evidence. We submit that such finding of fact should not be disturbed by this court, especially in the absence of evidence warranting any different finding.

Instead of transporting to Philadelphia the large service compressor (Plaintiff's Exhibit A attached to Beezley affidavit), another of said large service compressors, taken out of stock, was produced and operated by the witness Hugo C. Gibson and testimony given as to its operation. No

question was raised as to the identity of the two grease guns. No objection was made to the offer in evidence of Defendant's Exhibit 8 or to testimony relating thereto. Plaintiff offered no testimony as to lack of identity between Plaintiff's Exhibit A attached to Beezley affidavit, and Defendant's Exhibit 8. Plaintiff offered no testimony that the Beezley A grease gun had any different construction or operation from that of Defendant's Exhibit 8.

In the brief counsel for the plaintiff-petitioner attempts, *by argument*, to supply his total lack of *evidence*. If such argument had been presented as *evidence* in support of plaintiff-petitioner's *prima facie* evidence of infringement, defendant would have been afforded an opportunity to offer *evidence* in rebuttal thereof. Since we do not agree with plaintiff-petitioner's counsel that the operation that he describes is the normal or intended operation of the grease gun, or that it is ever so operated, or that such an operation is even *possible*, or that the "suctional effect" that he describes ever occurs in the actual operation of the grease-gun, or would occur even if his described (hypothetical) operation were possible, it is certain that if such argument of counsel had been presented as evidence, it would have been controverted by evidence additional to, but entirely consistent with, the evidence that defendant-respondent has actually submitted.

We gravely doubt that the court will consider conflicting assertions of counsel with respect to the operation of an alleged infringing machine whose actual operation, under service conditions, can only be competently described by experts or by those who actually construct or actually use the machine.

The burden of supplying such evidence clearly rests upon plaintiff-petitioner, *who has failed to present any evi-*

dence at all. Since defendant-respondent, although not having the burden of so doing, presented such evidence, it can be attacked only by evidence and not by pseudo-evidence of counsel.

Nevertheless the Court may consider that counsel for defendant-respondent should express his acquiescence in or dissent from the description of the alleged operation of the Hollingshead grease-gun set forth on pages 65-66 of plaintiff-petitioner's brief. We not only deny that the grease-gun is normally so operated but assert that such mode of operation is impossible.

In the first place, it is impossible to operate the grease gun, *as illustrated* in the drawing opposite page 73 of plaintiff-petitioner's brief, to force grease into the bearing, if for no other reason than that the so-called pump 15, 16 lacks the spring-pressed check-valve at the grease outlet channel. A pump of the "reciprocating piston" type shown, minus a check-valve, is not a *pump* at all. In the Hollingshead grease-gun a single depression of the "reciprocating plunger 16" does not suffice to force grease into the high pressure bearing. Repeated reciprocations of the reciprocating plunger are necessary to build up the pressure required to force grease into the bearing. Such pressure cannot be built up unless a check-valve is provided to prevent back flow of grease during each upward retracting movement of the reciprocating piston. The normal pressure—say 150 pounds—in the reservoir R, is wholly insufficient to force grease into the bearing. The pressure required to force grease into the bearing is many times in excess of this. It may even run as high as 10,000 pounds (p. 65, plaintiff-petitioner's brief). Now a single depression of the reciprocating plunger merely increases the pressure in the hose and coupler, but not to the degree required to forcibly expel

grease into the bearing. At each upward retraction movement of the reciprocating plunger 16 the check-valve prevents the grease backing up into the pump chamber (both by the built-up pressure in the hose and by the suction in the pump chamber when the piston is retracted) and maintains in the hose and coupler the somewhat higher pressure established therein by the previous downward advance of the pump plunger.

After repeated reciprocations, a sufficient pressure is built up in the hose and coupler to force the grease into the bearing.

It must be borne in mind that the volumetric capacity of the hose and coupler is not fixed and invariable. The hose 19 (see picture opposite page 73 of brief of plaintiff-petitioner) is capable of expansion longitudinally and transversely and does expand to accommodate the small added increments of grease which are forced into the hose at each downward advance movement of the reciprocating plunger.

After the bearing is lubricated the plunger 16 remains down during the detachment of the coupler from the grease-cup. Due to the high pressure still existing in the hose and coupler, the only effect of the advance of the cup 26, as the coupler is unscrewed from the grease cup, is to provide a small space to receive some of the excess grease which is packed into the hose and coupler. But the space is too small to hold all such excess grease. The remainder exudes through the orifice in cup 26 and must be cleaned off.

The supposititious vacuum inside the cup never forms, for the reason that the pressure upon the grease is not released prior to detachment of the coupler.

If, prior to detachment of the coupler from the grease cup, the plunger 16 were raised slightly from the position

shown in Fig. 9 to that shown in Fig. 10, it would not release or even reduce the pressure within the hose and coupler.

It appears, however, that while the pump of Defendant's Exhibit 8 contains a check valve, in Plaintiff's Exhibit A attached to the Beezley affidavit the check valve of the pump is missing. Counsel for plaintiff-petitioner asserts that no check valve was ever there. We assert that of course it was there when sold. This exhibit, as well as numerous other physical exhibits, has been on file for nine years. The various exhibits have been taken apart and reassembled repeatedly, and it could hardly be expected that they would all be in precisely the same condition as when filed.

The difficulty of assuming that the pump of Plaintiff's Exhibit A attached to the Beezley affidavit lacked a check valve, when sold by defendant-respondent, resides in the fact that the so-called pump ceases to be a pump at all, making the grease gun wholly inoperative. It necessitates the assumption that the mere depression of the plunger 16 from the position shown in Fig. 8 to the position shown in Fig. 9 would suffice to both multiply the pressure to the extent required to force the grease through the hose and coupler into the high pressure bearing and displace the volume of grease necessary to fill such a bearing. It is not conceivable that it would do either. If, in the actual operation of the pump, the reciprocating plunger 16 should be repeatedly reciprocated, then, in the absence of a check valve, at each upward movement of the plunger the vacuum thereby created under the plunger would draw the grease back into the pump barrel and again restore in the hose and coupler the initial pressure of approximately 100 lbs.

Even if we assume the absence of a check valve and that somehow the bearing has been filled, if the pump

plunger 16 should be slightly retracted, as shown in Fig. 10, the resultant drop in pressure in the hose and coupler would be comparatively insignificant and certainly would not remotely approximate the substantially entire release of pressure which is necessary in order to enable the coupler to have any suctional effect.

The demonstration before the Court of Appeals for the Sixth Circuit alluded to in the opinion of the Court (Record page 604) was made with a pump without a check valve, and of course not under service conditions. The court nevertheless held that "such retraction of excess lubricant as was made to appear upon demonstration was slight and was apparently only that commercially incident to the movement of grease upon release of pressure". Rec., p. 604.

In respect to the operation of the Hollingshead large service compressor or grease gun, we have the following conditions:

No evidence whatsoever in support of plaintiff-petitioner's contention that the coupler in such compressor, by any possible mode of operation, has or can have any "suction effect".

Testimony on the part of defendant-respondent that in a large service compressor alleged by it to be a substantial duplicate of the one offered in evidence by the plaintiff the coupler has and can have no "suction effect".

No objection by plaintiff-petitioner to the offering in evidence of this duplicate grease-gun; no objection to testimony taken relating thereto; no testimony in rebuttal thereof either to show the lack of identity between the two grease-guns or that the grease-gun offered in evidence by plaintiff-petitioner had any different mode of operation; and an express finding of fact by the Court of Appeals for

the Sixth Circuit that defendant-respondent's grease-guns were destitute of the "suction effect" and therefore without the sole alleged novel characteristic of the Gullborg grease-gun.

We submit that there is no reason why this Court should depart from what we understand is its established rule, namely, not to review findings of fact of the court from which an appeal is taken.

For some reason, not clear to counsel for defendant-respondent, plaintiff-petitioner devotes a part of its brief to pointing out the withdrawal by defendant-respondent of certain assignments of error in another appeal taken in 1928, No. 5397, which is *not* the appeal which resulted in the decision to which the petition for writ of *certiorari* in this case is directed. The appeal which resulted in the decision of the Sixth Circuit Court of Appeals which plaintiff-petitioner seeks to have reviewed by this Court is the appeal taken by defendant-respondent in 1932 and is Appeal No. 6419. No useful purpose would be served by discussing the assignments of error in this older appeal, or by explaining why certain assignments were withdrawn therefrom, or by explaining the structures of defendant-respondent involved therein, or by attempting to answer the inferences which plaintiff-petitioner's counsel seeks to draw therefrom. It suffices to say that in the appeal taken in 1932, which alone was before the Court, the assignments of error alleged, specifically and generically, invalidity of all the claims of the Gullborg patent in suit, and non-infringement of all of them by both types of Hollingshead grease-guns.

Claims 14 and 15, if Construed as Not Limited to a Grease Gun Whose Coupler Has a Suction Effect, Are Invalid.

With respect to claims 1, 2, 3, 4, 5, 6, 8 and 10 of the patent in suit, at the hearing before the Circuit Court of Appeals, both parties were in agreement that they are limited to a grease-gun the coupler element of which, in the operation of the grease-gun, has a "suction effect".

We do not know what position the plaintiff-petitioner in this case will take in the *Rogers v. Alemite* case with respect to claims 14 and 15. In the instant case the Court of Appeals for the Sixth Circuit held that claims 14 and 15, as well as claims 1-6, 8 and 10, are limited to grease-guns with "suction effect" couplers. The Court held that since the coupler of the other Hollingshead grease-gun (Plaintiff's Exhibit A attached to Cumming affidavit) concededly had no "suction effect", claims 14 and 15, as well as the other claims, were not infringed by this grease-gun. To this interpretation of claims 14 and 15, plaintiff-petitioner, in its brief, as well as in its petition for writ of *certiorari*, takes no exception. Since plaintiff-petitioner, in its petition for the writ, does not ask this Court to review that part of the decision of the Court of Appeals for the Sixth Circuit which holds that the Exhibit A Cumming type of grease gun is not an infringement of claims 14 and 15, it, by necessary inference, accepts that Court's interpretation of claims 14 and 15. The same necessary inference follows from its failure, in its brief filed in this Court, to ask for any other interpretation of claims 14 and 15. If we are correct in this understanding of plaintiff-petitioner's position, or in this interpretation of the necessary effect of plaintiff-petitioner's failure to ask a review of the appellate court's decision on *both* types of defend-

ant-respondent's grease guns, there is no occasion to discuss claims 14 and 15 at all, since if claims 1-6, 8 and 10 are not infringed, claims 14 and 15 cannot be infringed. If, however, the plaintiff-respondent in the *Rogers v. Alemite* case shall take the position that claims 14 and 15 are not limited to a combination wherein the coupler of the grease gun has a suctional effect but are broad enough to include within their scope the combination, with a specific construction of grease cup, of *any* old grease gun, whether or not the coupler has a suctional effect, and if this Court should decide that the plaintiff-petitioner, in the instant case, has the right, which we believe it has not, to contend for this broad interpretation of claims 14 and 15, and if, finally, this Court should also decide that claims 14 and 15 are entitled to be thus broadly construed, then it becomes necessary for us to attack their *validity,* since if claims 14 and 15 be thus broadly construed and also held valid, the sale by defendant-respondent of the Beezley Exhibit A type of grease gun, even though the coupler may have no suctional effect, may be held to be a contributory infringement.

We may say that neither plaintiff-petitioner nor defendant-respondent is particularly interested, except as it may effect taxation of costs, in defendant-respondent's right to use its obsolete and discarded large service compressor (Plaintiff's Exhibit A attached to Beezley affidavit) and that defendant-respondent is not remotely concerned as to its right to use, in such service compressor, a reciprocating plunger type of pump which, without a check valve, cannot function as a pump. The fundamental issue in this case is (or was) the question of the validity or scope of claims 14 and 15, that is, whether plaintiff-petitioner has the legal right, based upon those claims, to prevent defendant-respondent and the public generally from

selling old and unpatented grease guns to garages and filling stations, for use in pumping grease into the bearings of automobiles, including, of necessity, those automobiles that are equipped with plaintiff-petitioner's patented grease cups. We assume that this Court allowed the writ on the assumption that this was the issue involved in both the instant case and the *Rogers v. Alemite* case.

Since we have difficulty in conceiving that counsel for plaintiff-petitioner intends to confine its oral argument to the minor issue raised in its petition and discussed in its brief, we must assume that counsel's plan of campaign is, in the instant case, to keep the only fundamental issue (validity or scope of claims 14 and 15) in the background in order that he may argue that issue in the *Rogers v. Alemite* case, the record in which, particularly in its disclosure of the prior art, is by no means as complete as in the instant case, in the hope that, by thus avoiding confronting the real prior art as developed in the record in this case, he may stand a better chance of prevailing on the fundamental issue.

To this strategy we cannot reasonably object unless counsel shall take the position that the Hollingshead Company, in the instant case, would be bound by any decision in *Rogers v. Alemite* upholding the validity of claims 14 and 15, broadly construed as plaintiff-petitioner seeks to have it construed in that case. Plaintiff-petitioner, we submit, cannot take such a position. To entitle it to take such position, it must first have asserted, in the instant case, that the Court erred in its restricted interpretation of claims 14 and 15, and that the Court erred in holding that the sale of Exhibit A attached to Cumming affidavit (which embodies a coupler admittedly incapable of a suction effect) did not contributorily infringe claims 14 and 15; and fur-

ther it must have developed its position on this fundamental issue in its brief in order that defendant-respondent might be apprised of defendant-respondent's position in advance of the preparation and filing of its own brief.

If, contrary to our view, although the question of the validity and scope of claims 14 and 15 is not raised in the petition and the brief in support thereof, that question is in issue in the present case, then we contend that claims 14 and 15, if construed literally as being for a combination of an improved grease cup with any old grease gun, are invalid, and we submit the following argument in support of this position.

Where patent claims, literally construed, cannot be sustained as valid, the courts, including the Supreme Court, have, in many cases, held them invalid; while in other cases they have held them to be valid by importing into them some novel feature described in the specification and not expressly recited in the claims. In the instant case, we did not presume to instruct the Court of Appeals for the Sixth Circuit whether to construe claims 14 and 15 literally and hold them invalid or to construe them as limited to a grease gun whose coupler has a suction effect operation and to hold them not infringed; but we did most emphatically urge that the court must do one or the other. We so convinced the court. It adopted the alternative of importing into claims 14 and 15 an unexpressed limitation and held them not infringed.

If, however, it is sought to convince this Court that the claims are entitled to the broadest interpretation of which their language is susceptible, that is, to cover the combination of the specific grease cup of patent No. 1,307,733 in combination with any old grease gun, then we submit that the claims, so construed, are necessarily in-

valid. We base our contention on a long line of cases which hold that a patentee cannot, by the subterfuge of claiming the combination of two elements, one of which is an old article of commerce, deprive the public of the right to continue to make and sell such old article of commerce on the theory that such manufacture and sale would constitute a contributory infringement. More specifically, we invoke the application to the present case of the well established principle of patent law that where a combination is old and well known the patentee, by merely improving one element of the combination, cannot secure a valid patent for the old combination containing such improved element. He must rely, for his patent protection, on a patent for the improved element.

Claims 14 and 15 are directed to "The combination with a grease cup . . . of a grease pump . . .". This combination is a very old combination and is disclosed in numerous patents of the prior art, including—

Laskey and Arnold	U. S. Patent	242,141	Rec. p. 427
Stedman et al.	U. S. Patent	456,295	Rec. p. 433
Winkley	U. S. Patent	1,201,414	Rec. p. 442
Winkley Reissue	U. S. Patent	14,667	Rec. p. 447
Seng	U. S. Patent	1,322,357	Rec. p. 456
Seng	British Patent	3028 of 1915	Rec. p. 467
Alley	British Patent	21893 of 1906	Rec. p. 471

In these patents the grease pump was employed for injecting, under pressure, grease to parts of machines requiring lubrication, the coupler of the grease pump being applied to grease cups on said machines communicating with such machine parts. Even the bayonet joint connection between the coupler and the grease cup was old. The sole novel feature set forth in claims 14 and 15 is *the grease*

GREASE CUP OF
ALLEY BRITISH PATENT
RECORD PAGE 471

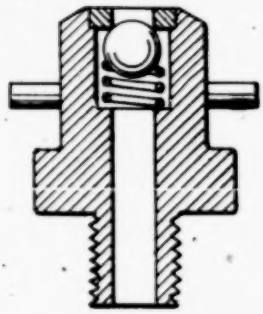

GREASE CUP OF
GULLBORG PAT. Nº 1307734
RECORD PAGE 411

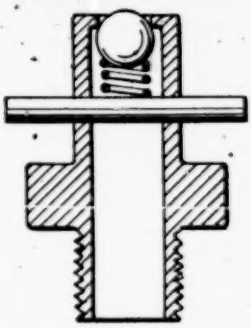

GREASE GUN OF ALLEY PAT.
APPLIED TO ALLEY'S GREASE CUP

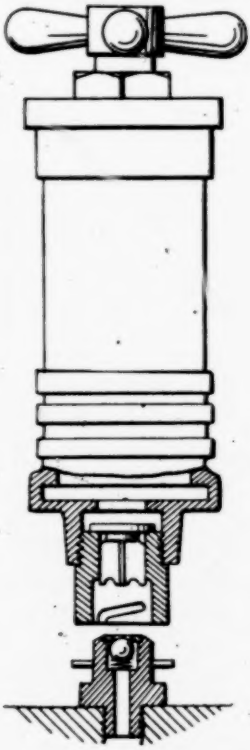

GREASE GUN OF ALLEY PAT.
APPLIED TO GULLBORG'S GREASE CUP

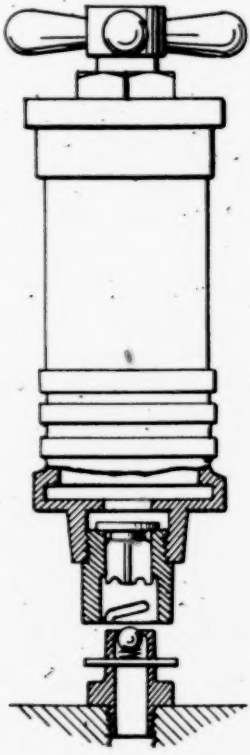

cup per se. Instead of, as in the ordinary bayonet joint, forming the members 31 (see fig. 3 of the Gullborg patent in suit, page 411, Record) for engagement with the bayonet slot 22 of the coupler (see fig. 2) as projections on opposite sides of the grease cup, the members 31 are formed by a pin which extends through the grease cup and affords a bearing for the spring (see fig. 4).

The Alley British patent (Record, p. 471) is an illustration of such an old combination. While the drawing shows a screw threaded connection between the coupler and the grease cup, a bayonet joint is a well recognized mechanical equivalent, and indeed the Alley patent specification states (bottom of page 2 and top of page 3):

> "It is obvious that the means for securing the pump upon the lubricator [grease cup] may be modified —for example, instead of a coarse pitch screw a bayonet or like catch may be used—and that the form of valve used in its nozzle may be varied."

That this meagre improvement in a mechanical detail of the grease cup involves inventive genius is open to serious doubt, but there is no occasion to debate or resolve this question, since this detail improvement—whether inventive or not—forms the subject matter of a separate patent, No. 1,307,733 (Rec. p. 453).

This improved and separately patented grease-cup had no other possible use than to coact with the old and well known pump and conduit, e. g., the pump and conduit of the Alley patent, which, when provided with a bayonet joint, as Alley describes, is provided with "means coacting with the ends of the pins for detachably connecting the discharge end of the said conduit with said grease cup".

Obviously patent No. 1,307,733 exhausted the possibilities of patent protection for this improvement. But in

claims 14 and 15 of the patent in suit Gullborg claims, as a separate and independent invention, precisely the same cup in combination with the old and well known grease pump.

In order that the Court may at a glance perceive the identity between the alleged inventions of the two patents, we quote, side by side, claim 14 of the patent in suit and claim 4 of the Gullborg patent 1,307,733:

Claim 4 of Patent No. 1,307,733. (Rec. p. 455)	*Claim 14 of Gullborg Patent in Suit.* (Rec. p. 415)
"4. A grease cup comprising a tubular member having one end flanged inwardly to provide a closure seat, a closure, a pin extending through said tubular member and on both sides thereof, and a spring confined between said pin and closure and tending to hold said closure on said seat."	"14. The combination with a grease cup comprising a tubular member having one end flanged inwardly to provide a closure seat, a closure, a pin extending through said tubular member and from both sides thereof, and a spring confined between said pin and closure, and tending to hold said closure on its seat, of a grease pump having a discharge conduit, and means coacting with the ends of said pin for detachably connecting the discharge end of said conduit with said grease pump [cup]*."

Claim 15 does not substantially differ from claim 14.

It will be observed that claim 14 of the patent in suit claims the pump element in such broad and comprehensive terms as to cover any imaginable pump adapted to coact

*The word "pump" at the end of claim 14 is a misprint; it should be "cup".

with a grease cup; that the claimed combination is also old, *the only feature distinguishing from the prior art being the specific construction of the grease cup,* all possible patent protection for which was exhausted by the issue of patent No. 1,307,733.

We repeat that it is an established principle of patent law that where an old combination is altered by improving one element thereof, the construction and operation of the combination being otherwise wholly unchanged, a valid patent may be secured for the improved element (if it involves invention), but the old combination cannot be repatented by reclaiming it with the improved element substituted for the old element.

The Court will at once perceive that if this principle of patent law were not applied, the inventor would be given a degree of patent protection wholly incommensurate with his invention.

The inventor would receive *two* patents for *one* invention.

He would be able to suppress the manufacture, use and sale of unpatented articles belonging to the public domain.

The last consequence cannot be better illustrated than in the present case, wherein precisely that consequence has occurred. For many years prior to the issue of the patent in suit the public was free to make, use and sell grease guns. A typical grease gun comprised, of necessity, a pump having a discharge conduit provided with means adapted to coact with a grease cup for detachably connecting the discharge end of the conduit with the grease cup, precisely as claimed in the patent in suit. The plaintiff-petitioner alleges that it has sold hundreds of millions of grease cups or pin fittings of the construction claimed in patent 1,307,733. The public, obviously, had the right to use these old grease guns

to supply grease to the patented grease cups. But when it was attempted to do this, the public was confronted with the patent in suit, wherein these same independently patented grease cups were again claimed in combination with any old grease gun. The manufacturer, vendor and user of these old grease guns was thereupon sued as a contributory infringer, and in many cases he was enjoined as such. If, therefore, claims 14 and 15 have the broad scope for which plaintiff-petitioner contends, plaintiff-petitioner is entitled to suppress the manufacture, use and sale, not only of grease guns with suctional couplers, but of *all* grease guns, because, obviously, every maker and vendor of a grease gun knows that, in view of the hundreds of millions of plaintiff-petitioner's grease cups that are in use, the vendor will inevitably apply such grease gun to such grease cups for the purpose of lubricating automobiles and other machines equipped with such grease cups.

And this is precisely the monopoly which plaintiff-petitioner seeks to establish and which, to a large extent, by the colossal campaign of oppressive litigation which counsel for plaintiff-petitioner details in his brief, it has already established. It seeks to monopolize, and has to a large degree monopolized, not only the grease *cup* market, but also the grease *gun* market irrespective of whether such grease gun embodies any patentable feature embodied in the grease gun of the patent in suit.

We submit that this is an unjust and unlawful extension of the patent monopoly to which plaintiff-petitioner may be entitled.

The following cases illustrate the well-established principle that where a patentee improves an element of an old combination without effecting the function and operation of the combination he can patent only the improved element

and cannot repatent the old combination including the improved element.

In *Underwood v. Gerber*, 149 U. S. 224, the patentee, as in the instant case, obtained two patents, one for a "combination" and the other for an element of the combination; the two patents being consecutively numbered and issued on the same date. The first was for an improved coating composition for "carbon" or "semi-carbon" paper. The second was for the combination of that coating composition and the paper. Such combinations of paper and coating compositions were old. Suit was on the second or combination patent. Judgment for the defendant below was affirmed. The second patent was held invalid in view of the first and the prior art showing the broad combination to be old.

In *Heald v. Rice*, 104 U. S. 737, the patent in suit covered a specific mechanical combination for utilizing straw as boiler fuel. The general combination was old, i. e., a specific straw-feeding apparatus attached to a boiler. The patent in suit was for the combination of that straw-feeding attachment with an improved boiler, one with reversible flues which handled the products of combustion in a better way. The patent was held invalid. The reversible flues added to the boiler did not affect the combination. The straw-feeding attachment attached to the boiler functioned independently of the manner of conducting away the products of combustion. The Court said at page 754:

> "If there is any superiority in the return flue boilers used with this attachment as a straw-burner over the fire-box boiler when used in the same way, the superiority is due not to any difference in the straw-feeding atfachment, nor in the mode of its operation, nor to any new feature of the combination, but merely to the superiority of the return flue boiler itself . . ."

In *Carbice Corporation of America v. American Patents Development Corporation*, 283 U. S. 27, the plaintiff's patent covered a transportation package consisting of a protective casing having packed therein a quantity of solid carbon dioxide (popularly called "dry ice") with a quantity of freezable product in proximity to the carbon dioxide, the solid carbon dioxide being in the middle of the package with the material to be refrigerated disposed around it.

Solid carbon dioxide was old and the defendant sold it knowing and intending that it should be used by the purchaser in order to complete the transportation package covered by the claims, and such transportation package was so completed. The owner of the patent sued the defendant for contributory infringement. The Court of Appeals for the Second Circuit gave the plaintiff a decree and it was reversed by the Supreme Court.

> "Relief is denied because the Dry Ice Corporation is attempting, without sanction of law, to employ the patent to secure a limited monopoly of unpatented material used in applying the invention." 283 U. S., pages 33-34.

The Court also stated (note, p. 34):

> "In such cases the attempt to use the patent unreasonably to restrain commerce is not only beyond the scope of the grant but also a direct violation of the Anti-Trust Acts."

In *Morgan Envelope Co. v. Albany Perforated Wrapping Paper Co.*, 152 U. S. 425, the patented combination was for a paper holding fixture and the roll of paper held by it. Defendant sold rolls of paper for use in the fixture of the patented combination and was held not to be liable for contributory infringement.

General Electric Co. v. Ohio Brass Co., 277 Fed. 917 (Circuit Court of Appeals, Third Circuit), is another case on all fours with the present case. There were two patents, one to Hewlett, No. 1,110,934 (not in suit), for a novel electrical insulator comprising discs flexibly connected in series, the other to Hewlett & Buck, No. 925,561 (in suit), for the combination of towers provided with cross-arms, and conductor spans freely suspended between the cross-arms by the series of flexibly connected disc insulators of the said Hewlett patent.

The only novel element of claim 6 was the novel and independently patented insulator. The Court proceeded to discuss the question whether this insulator could, in combination with common expedients in the art, be the subject of invention. It was held that it could not be, the Court stating (pp. 924-5, italics ours):

> "As the insulator in the combination of claim 6, particularly described in the specification and displayed in the diagrams, is the insulator of the Hewlett patent, or an insulator distinctly of its type, *we have the question whether the Hewlett insulator,* or one falling within its description, *can in combination with common expedients of the art be the subject of invention.*
>
> "Turning to claim 6, we find, as we have said before, the invention to be a combination of three elements: *First, towers provided with cross-arms; second, an electric conductor; and, third, disc insulators flexibly connected in series supporting the conductor,* thereby producing as a result its free suspension. 'Towers provided with cross-arms' were not new. At any rate, they are the equivalent of poles with cross-arms. Poles with cross-arms are an expedient of the art as old as the art itself. Current conductors, of course, are an expedient as old as poles. *The only other*

element is the insulator, and that insulator is intended for use only in suspended connection between cross-arm and conductor. Thus there is a *combination which embodies a specific element of suspended insulator in assemblage with expedients of the prior art, which together produce no function other than that which the suspended insulator would itself produce when in operation with these ordinary expedients of the art.*

. . . . . .

Whether used for one purpose or the other, or for both purposes, *such an insulator* in overhead suspension *can be used*—so far as we have been shown or can imagine—*only in connection with the very expedients of the art named as elements of the patent combination. At least, claim 6 discloses use of the insulator only with these expedients.* There must be a tower or pole with a cross-arm from which to suspend the flexible insulator at one end and a current conductor to be appended to the insulator at its other end. *Without these two expedients the insulator cannot work. This being true, can there be invention in a combination of three elements, when two of them, separately free to everyone, are indispensable to the functioning of the third?* Or, stated differently, *is there invention in a combination which produces no result other than that produced by one of its elements operating in the only way possible for it to operate—that way being through expedients common to the art?* . . . The complainant says here is invention. With this we cannot agree because: *First, we do not find a combination which in the patent sense is new. Nor can we find such a combination useful beyond that of the insulator itself with the expedients of the art open to it—expedients without which the insulator is useless.*"

Langen v. Warren Axle & Tool Co., 184 Fed. 720 (C. C. of A., *Third Circuit*), is another decision that is exactly

in point. The claim of the patent was for a pair of grab hooks, of a specific and presumably novel and patentable construction, with a draft device. The Court held that the claim was invalid for each of two reasons: first, that as originally presented, the claim was for the novel grab hook; and, second, that that being the only invention the patentee had made, he could not have a valid claim for a pair of the novel grab hooks associated with a draft appliance because grab hooks of the prior art had been arranged in pairs and associated with a draft appliance. The Court stated (p. 721):

> "The grab-hooks and draft appliance of the patent, in combination, coact as grab-hooks and draft appliances have always done. The *grab-hook of the patent,* by reason of its peculiar construction and form, *is very probably an improvement of no little utility. But the patentee cannot, merely because of that fact, have a patent for a combination which shall have, as one of its elements, a pair of such grab-hooks. He did not invent the combination. He invented, if he invented anything, an improved grab-hook.*" (Italics ours.)

In *re Ratican,* 1911 C. D. 267, Court of Appeals, District of Columbia, the actual invention was in the nozzle of a street sprinkler, but the inventor claimed the right to a patent for the combination of his new nozzle with old street sprinkler elements. The Court stated:

> "It will be observed that the alleged invention is for a combination of elements. Appellant in his brief contends that:
>
> > 'He has "reorganized the Ottofy Street flushing machine by replacing the separate flushing and sprinkling nozzles therein with an improved form of nozzle particularly adapted for flushing purposes, and capable of use as a sprinkling-nozzle as well".'

"In other words, *appellant contends that by improving one of the many elements in a combination he is entitled to a combination patent instead of a patent for a specific invention.*

". . . *Assuming,* for the purpose of this case only, *that the improvement in a nozzle heretofore used in street-sprinkling and street-flushing carts amounts to invention,* we fully agree with the tribunals of the Patent Office that *appellant is not entitled to a patent for a new combination for the obvious reason that his combination is not new at all. He has merely substituted one nozzle for another . . . He has merely taken the nozzle of the prior art, made specific changes therein, and then restored it to its former position in the combination.* One nozzle of the prior art was effective for street-cleaning and another for street-sprinkling. When his nozzle is used for either purpose it operates exactly as did the nozzle of the prior art. *If appellant has made an improvement upon the nozzle of the prior art he is entitled to be protected in the use of his invention, but he is certainly not entitled to a patent on a new combination merely because he has improved a single element of that combination.* (In re McNeil, C. D., 1902, 563; 100 O. G., 2178; 20 App. D. C. 294.) *He has improved an element of but has not made a new combination.*" (Italics ours.)

In *Radio Corporation v. Lord,* 28 Fed. (2d) 257, the Court of Appeals for the Third Circuit had before it a patent for a new combination, namely, a certain electrical mechanism and a vacuum tube. The vacuum tube *per se* was old. The Court, in its opinion, said (p. 260):

"*A single old element, whose patent monopoly has expired, cannot be put into a new patented combination as a constituent element, and thus have its individual monopoly revived for seventeen years more.* This

would be a new method of securing a patent, or a means of evading the patent law, by doubling the length of the life of a patent. A patent may not be secured on a single element by inclusion. The vacuum tubes are an element in the electrical circuits licensed under the contracts. It is these circuits, as such, and not the single unpatented elements, that are protected. *While the defendant has the exclusive right to manufacture, lease, and sell the combination, it does not have the right to withhold from the manufacture, use, and sale by others a single one of the elements,* composing the circuits, *which is no longer protected by a patent.* In other words, *a patentee may not prevent the individual manufacture, use and sale of a single unpatented element, which the world is free to make, use and sell, by simply including it as an element in a new patented combination.* To put it differently, *the inclusion in a patented combination of an unpatented element does not give the patentee of the combination a monopoly of each element, and the exclusive right to make, use, and sell that element, independent of the combination. So long as the* patent covering vacuum tubes was in existence, the patentee of this element of the combination was protected, and it could not be included in the combination without a license to do so; but, when the patent on this tube element expired, the rights, which were theretofore vested in the patentee, became the property of the public, and not of the patentee of the combination." (Italics ours.)

In *Backstay Co. v. Hamilton,* 262 Fed. 411, the Circuit Court of Appeals for the First Circuit had before it a patent containing claims for an improved welt and also claims for a welt in combination with the article to which the welt was applied. The Court found the claims for the improved welt anticipated and those for the combination invalid, stating (p. 412 and p. 414):

> "It does not seem to me that the third and fourth claims are valid; the invention, if any, resides in the welt and cannot be held to extend to and include any and every article to which the welt may be attached."

These same claims later came before the Court of Appeals for the Seventh Circuit in *Backstay Co. v. Zenite Co.*, 293 Fed. 23. In this case the claims for the welt were held valid but the claims for the combination were held invalid, the Court stating (p. 24):

> "With the conclusion reached as to claims 3 and 4 of the device patent we are likewise in accord. Whatever of novelty there is resides wholly in the welt itself. There is not the suggestion of a new or different result flowing from the combination of this welt with the article to which it is attached. Any one of numerous welts long in the art could be employed where this one is used, and when applied the combined result would be the same. Whatever difference there is between this *and the other welts would be wholly* in the welt itself, whereby in this it is more readily applied, and the tack or other fastening means more simply and effectually concealed."

In *Warner Typewriter Co. v. Webster Co.*, 144 Fed. 405, the defendant sold typewriter ribbons, wound on spools, to users of Underwood typewriters. It was sued for infringement of a patent containing combination claims including the ribbon spools. Defendant's spools were adapted to be used in the patented combination and defendant knew that such use was intended. Plaintiff claimed that defendant was a contributory infringer. The Court, however, refused to take that view, holding (pp. 407 and 409) that the spool element of the Underwood typewriting machine was one common to and necessary for all typewriting machines. The Court pointed out the inequitable consequences that would

flow from accepting plaintiff's contention that defendant was a contributory infringer, stating (p. 409):

> "If complainant's contention is correct then every owner of an Underwood typewriting machine must purchase ribbons and spools of the complainant's, and pay any price therefor they fix, and, as a result, complainants have not only a monopoly of the machine itself, but of the supplies, inked ribbons, that must be used with it, and this without any license restriction in the sale, and without a patent for the spool and ribbon in combination, or for either alone. This mode of creating monopolies has just been condemned by the Circuit Court of Appeals, Second Circuit (145 Fed. 933*), even where there is a license restriction, in reversing Cortelyou v. Charles Eneu Johnson & Co. (C. C.) 138 Fed. 110. To sustain the contention of the complainants will, in effect, give them a monopoly, not only of the patented machine, but of an unpatented article, inked typewriter ribbon, now in common use, and as necessary to the general *public as ink itself.*"

In *Troy Wagon Works Co. v. Ohio Trailer Co.*, 274 Fed. 612, the patent was for the combination of an automatic locking device with old steering elements of vehicles. The Court of Appeals for the Sixth Circuit held that—

> "It is clear from the evidence in this case that the automatic locking device of Eccard & Smith functions in identically the same way as the automatic locking devices in the prior patent art, and that the other elements in this combination produce no new or different result in combination with this automatic locking device than produced by these elements when locked by any other means. It necessarily follows that *the combination* of an automatic lock with the old steering elements of vehicles of the character described in this patent does not constitute invention" (citing numerous cases) (p. 621).

*Cortelyou v. Charles Eneu Johnson & Co., 145 Fed. 933 (C. C. A. 2d).

In *Wall Pump & Compressor Co. v. Gardner Governor Co.*, 28 F. (2d) 334, Gardner, the patentee, claimed the combination with an air compressor of an electrically controlled automatic device for starting and stopping the air compressor and when the compressor was at rest automatically opening the valve and blowing out the precipitated oil and moisture accumulating in the line of compression. This automatic device had been previously patented by one Wilboken. The Court of Appeals for the Seventh Circuit held that there was no invention in the combination, stating (p. 338):

> "Wilboken's device had no utility of itself, but only in connection with air compressors and similar mechanisms. With this device in quite general use, can it be said that invention was involved in buying it in the open market and using it in combination with the very sort of structure in which it intended to be incorporated? It serves in this combination no different purpose from that for which Wilboken made and sold it as an article of commerce, and we do not see how Gardner's incorporation of it gave his machine an advantageous status in the art as a combination."

In *Harvey-Hubbell v. General Electric Co.*, 267 Fed. 564, the Court of Appeals for the Second Circuit had before it two patents dated the same day and numbered consecutively, as in *Underwood v. Gerber* and as in the instant case. One patent, No. 774,250, was drawn to a combination of a plug and cap. The other patent, No. 774,251, covered the plug *per se*.

The Court found that the gist of the invention, as defined in the claims in suit, *was in the construction of the plug*, and that the cap was merely any kind of a cap that would go with that novel plug. The defendant was manu-

facturing a cap which was designed and adapted to fit the plaintiff's plug and which cap, as above noted, was included as an element of the claim defining the novel plug.

The Court concluded that if the claims were read so as to cover defendant's structure they would be void over the prior art. In this Harvey-Hubbell case, like the present case, the defendant had sold an element of the combination claimed, namely, the portable *cap* which could make connection with the other elements of the combination supplied by the plaintiff, namely, the wall *plugs*, wherever the latter might be located, and the combination was not completed until the user made the connection.

The portable *cap* was held to be non-infringing although it completed the combination claim. The case of *Leeds & Catlin v. Victor Company*, upon which plaintiff-petitioner in the instant case may rely, was distinguished from in the Harvey-Hubbell case.

The Edison Electric Light Company, et al. v. Peninsula Light, Power & Heat Company, et al., 101 Fed. 831, was decided by the Circuit Court of Appeals for the Sixth Circuit, on which sat Justices Lurton and Day. Edison had secured a patent on a new system of electric wiring—and later developed an improved transformer for use with that system. He secured a patent for the transformer and in the transformer patent in addition to specific claims to the transformer he secured broad claims to the combination of any old transformer in his new wiring system.

His licensee had wired a hotel for the new system, installed an Edison transformer, and supplied current to the hotel. It should be noted that the complete combination was originally sold and installed including a transformer.

Later the hotel desired to buy current from an independent source (the defendant) who put in its own transformer and thereafter supplied to the hotel current which was used in the Edison wiring system according to the Edison teaching. Bill for contributory infringement was dismissed.

The effect of the decision was to prevent an attempt at monopoly in unpatented transformers based on a combination claim for a new system of wiring and any transformer. It was arrived at in terms of implied license, although it should be noted in this connection that the entire combination had originally been sold by the patentee's licensee. The Court said, at page 836:

> "But there may be circumstances under which the sale by a patentee of one patented article will carry with it the right to use another in cooperation with the first, although the thing be covered by a second patent. Thus, if the article sold be of such peculiar construction as that it is of no practical use unless it be used in combination with some subordinate part covered by another patent of the vendor, the right to use the latter in cooperation with the former might be implied from circumstances. It is a general principle of law that a grant necessarily carries with it that without which the thing granted cannot be enjoyed. The limitation upon this is that the things which pass by implication only must be incident to the grant, and directly necessary to the enjoyment of the thing granted. The foundation of the maxim lies in the presumption that the grantor intended to make his grant enjoyable."

All of the patents involved in the cases above discussed are essentially of the same character as that of the patent in suit so far as the alleged invention thereof is literally defined in claims 14 and 15. Since a vast number of

legitimate combination patents are granted from week to week by the Patent Office, it is inevitable that a limited number of claims for such uninventive pseudo-combinations should escape through the meshes of the examination, due either to a lack of adequate knowledge by the Examiner of the practical commercial art or to the Examiner's imperfect knowledge of patent law. The principle for which we are contending is, however, well recognized in the Patent Office and there are many Patent Office decisions that show that the principle is fully understood and is intelligently applied to cases that come before the Board of Appeals or the Commissioner. A few illustrative cases may be cited.

Among other claims which were before the Commissioner on Appeal in *ex parte Wigginton*, 279 O. G. 729 was the following claim:

> "31. The combination with loose sheets, of a holder comprising side and end members disposed at right angles, and a support associated with said holder to support the sheets at an acute angle to said end member."

The following excerpts from the opinion sufficiently recite the facts and the point decided:

> "The decision of the Examiners-in-Chief is based on the ground that the applicant is not entitled to these claims in view of the fact that he had already been granted a patent for the same invention.
>
> "It appears that this application as filed contained claims for the holder and claims, such as present claim 31, to the combination of this holder with loose sheets without in any way specifying the character of those sheets or how they coact with the specific holder. A requirement for division was complied with, and an

additional application was filed for the holder itself, which application has matured into Patent No. 1,270,-082, being the patent referred to by the Examiners-in-Chief.

"The question here is not whether the patent granted on the divisional application is prior art but *whether the appealed claims cover an invention different from that covered by the claim of the patent.*

" . . . this Office has no authority to grant two patents for the same invention. *The Office has held that the holder was an invention over the prior art; but certainly there was no further invention in using this holder for the purpose for which it was intended,* which is all that the appealed claims cover, since they specify merely the combination with loose sheets of a certain specific holder. These claims are thought to be clearly unpatentable in view of the ruling in *Underwood v. Gerber,* supra, which, it is thought, is not based merely on the ground that the earlier patent had not been put in suit, and in *Palmer Pneumatic Tire Co. v. Losier,* (90 Fed. Rep. 732)." (Italics ours.)

Another case exactly in point is that of *McBride v. Kroder,* 21 Gour. 84-9. The invention was a curtain pole fixture. This was claimed in combination with the door jamb or wall on which the fixture was to be supported. The Commissioner held that the combination of a door jamb and a curtain pole fixture was old and that no claim could be allowed for such old combination merely because the curtain pole fixture was novel; it being well settled that (italics ours)—

"where the combination as a whole is old, it is not rendered patentable by the substitution therein of a different element or elements (in this case the novel fixture) whether such element is in itself new or old" (*In re* McNeil, 100 O. G. 2178; 20 App. D. C., 294).

In *Ex parte Campbell,* 18 Gour. 6-12, a novel cuspidor was mounted detachably in a ring. It was old to mount cuspidors detachably in a ring. The Commissioner held, therefore, that there could be no invention in mounting the novel cuspidor in a ring, that no claim could be allowed therefor, and that——

> "an applicant who secures the allowance of claims to his real invention is not entitled to other claims for the use of that invention in connection with old features of construction which are common in the art."

The classic decision of the Commissioner of Patents constantly cited to solicitors practicing before the Office, is *Ex parte* McNeil, Commissioner's Decisions, 1902, page 313, 100 Official Gazette, 1976. In that case the applicant claimed, in a sewing machine, the combination with an old trimming device of a particular stitch-forming mechanism which he asserted was new with himself. The Commissioner stated:

> "Borton and Willcox having invented the combination of a trimmer with a stitch-forming mechanism, it is not invention to combine a trimmer with another stitch-forming mechanism whether the stitch-forming mechanism be new or old. . . . If appellant regards himself to be the original inventor of the particular stitch-forming mechanism shown and described, he should claim it."

We have deemed it unnecessary to explain the application of each of the foregoing decisions to the present case, their identity in principle being obvious.

It is assumed that plaintiff-petitioner will rely upon the decision of this Court in the *Leeds and Catlin v. Victor Talking Machine Co.* cases, 213 U. S. 301 and 325. The patent involved in these cases related to talking machines and was

for the combination of a stylus and diaphragm with a disc record. Both elements were novel but neither possessed any utility without the other. The stylus and diaphragm differed from that of the prior art in that they were not actuated by feed mechanism but were freely movable laterally. The disc differed from the prior art in that it had grooves of a peculiar character, to the lateral undulations of which, in the rotation of the disc, the diaphragm and stylus freely conformed. Each element was necessary to the operation of the other. The invention did not consist, as in claims 14 and 15 of the instant case, of an improvement of merely one element of an old combination. The patentee did not claim, as a new combination, an old combination, one element of which was improved. There were not two patents, one for the disc or for the diaphragm and stylus and the other for the combination. There was but one invention and but one patent, and that patent was for a new combination in which the elements coöperated with the result of a new mode of operation not characteristic of pre-existing talking machines.

The defendant manufactured disc records, of the character of that defined in the combination claimed, ostensibly for use with its own reproducing device but actually for use in connection with the Victor Company's talking machine which embodied the freely laterally movable diaphragm and stylus of the patented combination.

In the original case involving the patent in suit, it was decided by the Court of Appeals for the Sixth Circuit (*Lyman, et al. v. Bassick*, rendered March 23, 1927, 18 Fed. 2d 29), that the case before it was controlled by the *Leeds and Catlin v. Victor Talking Machine Co.* case. We see no occasion to go into a detailed review of the facts and evidence that were before the Court in that case and which, in

the opinion of the Court, presented some analogy to the talking machine case. It suffices to say that the facts and evidence upon which the charge of infringement in *Lyman et al. v. Bassick* was based were essentially different from the facts in evidence upon which the charge of infringement was based in the instant case. We need only to refer to the significant fact that this same Circuit Court of Appeals in the instant case refused to find *Leeds and Catlin v. Victor Talking Machine Co.* controlling.

Leeds and Catlin v. Victor Talking Machine Co. was also considered by the Court of Appeals for the First Circuit in *Alemite v. Lubrair,* 62 Fed. 2d, 899, which involved only claims 14 and 15 of the patent in suit. The Court, commenting upon the decision in *Leeds and Catlin v. Victor Talking Machine Co.,* said (p. 901):

> "The disc was useless except in combination with the reproducing mechanism. It was the combination which produced the result, and carried out the invention of the patent—a very different situation from that presented here where the combination alleged to infringe accomplishes no new result. The broad expressions in the opinion are to be read with the facts in mind and as limited by the Carbice Corp. Case, supra."

In *Alemite v. Lubrair,* 62 Fed. (2nd) 899, the decision was in conformity with the decision of the Court of Appeals for the Sixth Circuit in the instant case, the Court holding that there is no invention in combining the separately patented grease cup with a grease gun, except perhaps with the specific grease gun of the patent in suit, and that claims 14 and 15, unless construed to be so limited, are invalid.

Even in the *Leeds & Catlin* case, the broad question whether defendant-petitioner could legally sell unpatented

disc records, if they were intended and adapted for use with the talking machines of the plaintiff-respondent, was not directly decided. See page 337. There were two cases presented for the decision of this Court. In the first case, 213 U. S. 301, the only question presented was whether claims 5 and 35 were valid. No question of contributory infringement arose. In the second case, 213 U. S. 325, the defendant-petitioner had been enjoined from infringing these claims. The District Court, affirmed by the Circuit Court of Appeals, adjudged the defendant-petitioner guilty of contempt of court for violating the injunction restraining the defendant from infringing claims 5 and 35. The Supreme Court held (p. 337) that it was unnecessary to consider the broad question whether disc records, being unpatented articles of commerce, could be legally sold by the petitioner, since "the facts of the case exclude petitioner from the situation which is the foundation of the contention".

We need not, and do not, go so far as to contend that a patentee can never have separate valid claims, or possibly even separate patents, for a new combination and for a new element of that combination. If the combination produces a new mode of operation or result as such, independent of or additional to the new mode of operation or result of the new element *per se,* there may be, conceivably, two inventions and therefore two valid claims, one for the new element and one for the new combination. But we need not discuss this question, since the instant case presents no such situation. The mode of operation of an old or unpatented grease-gun and the result produced thereby, when applied to the patented grease-cup, are precisely the same as its mode of operation when and result applied to grease-cups of the prior art. As was held by the Circuit Court of

Appeals for the First Circuit in *Alemite v. Lubrair,* 62 Fed. Rep. (2d) 899 (900):

> "As has been said, pressure grease cups were old in the art. All of them were intended to be used with a grease gun, which could be temporarily connected to supply lubricant. The combination of a Gullborg grease cup with an unpatented grease gun has no new action or advantage, except such as is furnished by the improved grease cup. It lacks the more effective action of the Gullborg cup and Gullborg gun. Given the Gullborg cup, we are unable to see any invention in combining it with a grease gun, except perhaps with the Gullborg gun. The claims in suit seem to us clearly invalid unless restricted to such a combination. In any event the combination of the Gullborg cup with a grease gun was within the scope of the patent on the cup, not of the patent on the improved gun. The case seems to us similar in principle to Heald v. Rice, 104 U. S. 737, 26 L. Ed. 910; Underwood v. Gerber, 149 U. S. 224, 13 S. Ct. 854, 37 L. Ed. 710; Morgan Envelope Co. v. Albany Perforated Wrapping Paper Co., 152 U. S. 425, 14 S. Ct. 627, 38 L. Ed. 500, and Carbice Corp. of America v. American Patents Development Corp., 283 U. S. 27, 51 S. Ct. 334, 75 L. Ed. 819. In the lower courts, Edison Electric Light Co. v. Peninsular Light, Power & Heat Co. (C. C. A.), 101 F. 831, and Radio Corp. of America v. Lord (C. C. A.), 28 F. (2d) 257, certiorari denied, 278 U. S. 648, 49 S. Ct. 83, 73 L. Ed. 560, may be referred to."

The concluding part of the opinion in the above case points out the analogy between cases where a plaintiff might seek to impose as a condition of its licenses under its grease-cup patent that only its own grease gun should be used therewith, which would hardly be permissible under the Clayton Act, and the attempt to secure the same result,

clearly contrary to public policy, by the subterfuge of claiming the new grease-cup in combination with any old grease gun. We submit that the following expression of opinion of this Court (p. 901) should have not only a powerful appeal to reason and common sense, but is in precise conformity to the long line of decisions which we have heretofore cited:

> "It is probable that under the Clayton Act (38 Stats. 730, § 3 [15 USCA § 14]) the plaintiff would not be permitted to impose as a condition of its licenses that its own grease gun should be used with the Gullborg grease cup, an indication of public policy which furnishes a reason for not construing the patent to accomplish that result unless the law so requires. This is probably so irrespective of the statute. See Carbice Corp. Case, supra; United Shoe Machinery Corp. v. United States, 258 U. S. 451-465, 42 S. Ct. 363, 66 L. Ed. 708, and Radio Corp. of America v. Lord, supra. It is highly undesirable that patents should be so construed and upheld as to give a monopoly on other things besides the subject-matter of the invention. Carbice Corp. Case, supra. In our opinion the law of contributory infringement has been carried quite far enough in the public interest. We are not disposed to extend it. As Judge Lowell said in the District Court, referring to the plaintiff's contention, 'It isn't what the patent was meant to be. It is contrary to the idea of patents.' From what has been said, it follows that in our opinion the District Judge was right in refusing to grant the injunction."

Conclusion.

We respectfully submit:

1. That the finding of fact by the Circuit Court of Appeals for the Sixth Circuit that the grease gun sold by the Hollingshead Company to Beezley was not of the "suction effect" type should not be disturbed.

2. That the sale by the Hollingshead Company of grease guns of this type did not constitute a contributory infringement of the Gullborg patent.

3. That the claims, and particularly claims 14 and 15, of the Gullborg patent are invalid.

4. That plaintiff-petitioner is with legal right, under the patent in suit, to monopolize the manufacture, use or sale of old or unpatented grease guns.

Respectfully submitted,

FRANK S. BUSSER,
LEONARD L. KALISH,
Counsel for Defendant-Respondent.

CLERK'S COPY.

TRANSCRIPT OF RECORD

Supreme Court of the United States

OCTOBER TERM, 1935

No. 31

G. S. ROGERS, DOING BUSINESS AS REX DUPLEX FITTING COMPANY, AND R. W. DUSENBERRY, PETITIONERS,

vs.

ALEMITE CORPORATION

ON WRIT OF CERTIORARI TO THE UNITED STATES CIRCUIT COURT OF APPEALS FOR THE THIRD CIRCUIT

PETITION FOR CERTIORARI FILED APRIL 24, 1935.

CERTIORARI GRANTED MAY 20, 1935.

SUPREME COURT OF THE UNITED STATES

OCTOBER TERM, 1935.

No. 31

G. S. ROGERS, DOING BUSINESS AS REX DUPLEX FITTING COMPANY, AND R. W. DUSENBERRY, PETITIONERS,

vs.

ALEMITE CORPORATION

ON WRIT OF CERTIORARI TO THE UNITED STATES CIRCUIT COURT OF APPEALS FOR THE THIRD CIRCUIT

INDEX.

	Original	Print
Record from D. C. U. S., Western Pennsylvania	1	1
Docket entries	1	1
Bill of complaint	6	3
Answer by G. S. Rogers and R. W. Dusenberry	12	7
Statement of evidence	23	14
Appearances	23	14
Testimony of Don Alexander	24	15
Robert H. Kidd	36	24
Marvin Walkow	52	35
Edwin J. Balluff	55	37
Nelson Cornell	57	39
M. K. Ulrich	61	42
Thomas H. Bryson	65	44
M. K. Ulrich (recalled)	72	49
Elwood Hansmann	73	50
Patrick C. Gasparin	80	55
R. W. Dusenberry	87	60
J. Roy Van Kirk	130	90
C. L. W. Trinks	138	96
Don Alexander (recalled)	173	121
Elwood Hansmann (recalled)	174	121

JUDD & DETWEILER (INC.), PRINTERS, WASHINGTON, D. C., JUNE 18, 1935.
—6502-C

	Original	Print
Findings of fact, conclusions of law and opinion, Schoonmaker, J.	180	126
Decree	184	128
Defendants' petition for appeal	187	130
Assignments of error	188	131
Order allowing defendants' appeal	189	132
Bond on appeal (omitted in printing)	190	
Citation and service (omitted in printing)	191	
Stipulation re original transcript	192	132
Stipulated præcipe for transcript of record on appeal	193	133
Certificate of clerk (omitted in printing)	198	
Proceedings in U. S. C. C. A., Third Circuit	199	136
Argument and submission (omitted in printing)	199	
Opinion, per curiam	200	136
Judgment	202	137
Petition for rehearing (omitted in printing)	203	
Order denying petition for rehearing	204	138
Clerk's certificate (omitted in printing)	205	
Order allowing certiorari	206	138
Stipulation to dispense with printing of plaintiff's exhibit 13.	207	139
Plaintiff's Exhibits:		
No. 13—Alemite price list (omitted in printing)	208	
No. 14—(a) to (l)—Defendants' circulars and price lists	209	139
No. 18—Defendants' sales literature comprising Rex price list and trade classification	218	144
No. 19—Copy of letter from Dusenberry to Hahn	220	145
No. 21—Receipt to Wade's Service, Inc., representing transaction involving 50 Rex fittings	221	146
No. 24—Sales slip identified by Balluff	222	147
No. 26—Sales receipt identified by Nelson Cornell	223	148
No. 28—Receipt representing the Ulrich transaction	224	149
No. 29—American Legion publication containing Robert H. Kidd advertisement of defendants' equipment	225	150
No. 30—Voucher in payment for defendants' Rex fittings sold to Equitable Auto Company	226	151
No. 31—Rex Duplex Fitting Company invoice to Equitable Auto Company	228	153
No. 34—Drawing of Lyman compressor used in Balluff transaction, the drawing being a copy of Plaintiff's Exhibit Chart 11 identified in the Lyman decree	229	154
No. 36—Drawing illustrating defendants' Rex compressor and coupler outfit shown in conjunction with Alemite pin fitting	230	155
No. 37—Certified copy of Gullborg patent 1,307,734	231	156
No. 38—Certified copy of disclaimer of claim 12 of Gullborg patent 1,307,734	231	161
No. 39—File wrapper and contents of Gullborg patent 1,307,733	232	162
No. 40—File wrapper and contents of Gullborg patent 1,307,734	287	217

	Original	Print
No. 41—Circular of Rex Duplex Fitting Co., illustrating and describing defendants' Rex compressor and coupler outfit	337	267
No. 42—Rex Duplex Fitting Sales Co. circular descriptive of defendants' Rex compressor and coupler outfit	338	268
No. 45—Drawing of Alemite C-600 compressor and coupler outfit shown in conjunction with defendants' Rex fitting	339	269
Defendants' Exhibits:		
Exhibit B—Drawing of defendants' Rex fitting and non-suction effect coupler	340	270
Exhibit C—Drawing of coupler of Gullborg patent 1,307,734	341	271
Exhibit D—Copy of French Seng patent No. 468,869	342	272
Clerk's certificate (omitted in printing)	346	

[fol. 1]

IN UNITED STATES DISTRICT COURT, WESTERN PENNSYLVANIA

Docket Entries

July 28, 1932, Bill of complaint filed.

July 28, 1932, Subpœna issued.

July 28, 1932, Motion for preliminary injunction filed.

July 28, 1932, Affidavit of M. K. Ulbrech filed with Exhibit B.

July 28, 1932, Exhibit A (Ulrich affidavit) filed.

July 28, 1932, Affidavit of J. E. Otis, Jr. filed.

July 28, 1932, Exhibits A, B, C, D, E, F, G, H, I, J, K, L (Otis affidavit) filed.

July 28, 1932, Order made granting a rule on defendants to show cause why a preliminary injunction should not issue; rule returnable Aug. 30, 1932; and allowing the parties to retain possession of exhibits.

Aug. 4, 1932, Subpœna returned served on R. H. Kidd, at Pittsburgh, Pa. on August 1, 1932; served on G. S. Rogers, doing business as Rex Duplex Fitting Co. and R. W. Dusenberry together with bill of complaint, affidavits, motion for preliminary injunction and order to show cause, at Pittsburgh, Pa. on July 29, 1932.

Aug. 5, 1932, Præcipe for appearance of Clarke & Doolittle, J. R. Van Kirk and Thos. Griggs for defendants filed.

Aug. 11, 1932, Stipulation filed postponing hearing on motion for preliminary injunction to Sept. 22, 1932; defts. [fol. 2] have until Sept. 10, 1932 for filing reply papers; plaintiff has until Sept. 19, 1932 for filing rebuttal papers.

Sept. 9, 1932, Stipulation filed extending time for defendants to file their answer to September 10, 1932.

Sept. 9, 1932, Affidavit of G. S. Rogers filed.

Sept. 9, 1932, Affidavit of R. W. Dusenberry filed.

Sept. 9, 1932, Answer of G. S. Rogers and R. W. Dusenberry filed.

Sept. 19, 1932, Affidavit of J. D. McClellan filed.

Sept. 19, 1932, Affidavit of F. R. Ross filed.

Sept. 19, 1932. Affidavit of Edwin J. Bolluff filed.

Sept. 19, 1932, Affidavit of Don Alexander filed.

Sept. 19, 1932, Affidavit of Nelson Cornell filed.

Sept. 19, 1932, Affidavit of A. W. Herron filed.

Sept. 20, 1932, Affidavit of S. D. Miller filed.

Sept. 20, 1932, Affidavit of Robert H. Kidd filed.

Sept. 20, 1932, On petition of Clarke & Doolittle order entered granting leave to Clarke & Doolittle, J. R. Van Kirk and Thomas N. Griggs to withdraw their appearance for R. H. Kidd.

Sept. 22, 1932, Hearing held, Cav; McVicar, J.

Sept. 26, 1932, Defendants' reply to summary for plaintiff filed.

[fol. 3] Sept. 26, 1932, Order of court filed and entered directing that motion for preliminary injunction be granted against R. H. Kidd, and refusing motion as to G. S. Rogers and R. W. Dusenberry—let a decree be prepared accordingly.

Sept. 26, 1932, Order of court filed and entered directing that Bill of complaint be taken decree pro confesso against R. H. Kidd.

Oct. 19, 1932, Order of court filed and entered denying plaintiff's motion for preliminary injunction as to G. S. Rogers and R. W. Dusenberry.

Oct. 19, 1932, Order of court filed and entered directing that writ of preliminary injunction issue against R. H. Kidd enjoining R. H. Kidd from selling lubricating equipment.

Oct. 19, 1932, Injunction bond in the sum of $200.00 filed and approved.

Oct. 27, 1932, Decree filed and entered concluding that plaintiff is the owner of Letters Patent; said Letters patent are good and valid; defendant R. H. Kidd has infringed on said letters patent; writ of permanent injunction shall issue restraining R. H. Kidd from further infringement; this decree shall be without costs to either party.

Nov. 2, 1933, Hearing before Schoonmaker, J.

Nov. 3, 1933, Hearing continued.

Nov. 4, 1933, Hearing concluded, Cav.

Nov. 4, 1933, Trial memo filed.

[fol. 4] Jan. 12, 1934, Findings of fact, conclusions of law, and opinion filed and entered concluding that a decree may be submitted granting the plaintiff the relief prayed for in its bill of complaint.

Jan. 19, 1934, Final decree filed and entered adjudging certain patents good and valid, directing issuance of injunction and appointing Thos. D. Chantler, Esq. special master for accounting.

Jan. 19, 1934, Writ of injunction issued.

Jan. 20, 1934, Writ of injunction returned served on G. S. Rogers doing business as Rex Duplex Fitting Co. and R. W. Dusenberry at Pittsburgh, Pa. on January 19, 1934.

Feb. 15, 1934, Affidavit of G. S. Rogers and R. W. Dusenberry filed.

Feb. 15, 1934, Motion to amend decree and injunction filed.

Feb. 17, 1934, Hearing before Schoonmaker, J. arg list.

Feb. 17, 1934, Order of court filed and entered on motion to amend decree and injunction denying motion for modification.

Feb. 17, 1934, Defendant's petition for appeal filed.

Feb. 17, 1934, Order filed and entered allowing defendants' appeal.

Feb. 17, 1934, Assignments of error filed.

[fol. 5] Feb. 27, 1934, Appeal bond approved by court and filed.

Feb. 27, 1934, Citation issued returnable March 28, 1934.

April 28, 1934, Petition of defendants for extension of return day of citation.

April 28, 1934, Affidavit of Albin C. Ashlberg filed.

April 28, 1934, Order of court filed and entered extending return day of citation nunc pro tunc to June 1, 1934.

May 16, 1934, Transcript of testimony filed by leave of court.

May 16, 1934, Stipulation filed directing that at the time of the trial plaintiff was the owner of U. S. Letters Patent #1,307,734 patent in this suit etc.; plaintiff was at the time of trial a corporation organized and existing under the laws of State of Delaware; plaintiff was theretofore known as The Bassick Mfg. Co. and Alemite Mfg. Corp.

May 17, 1934, Stipulated præcipe for transcript of record on appeal filed by leave of court.

May 17, 1934, Stipulation re: original transcript filed by the leave of court.

[fol. 6] In United States District Court

Bill of Complaint—Filed July 28, 1932

Plaintiff, for complaint against defendants, alleges as follows:

1. Plaintiff, Alemite Corporation (formerly known as The Bassick Manufacturing Company and Alemite Manu-

facturing Corporation), is a corporation organized and existing under and by virtue of the laws of the State of Delaware, a citizen of Delaware, a resident of and having its principal place of business at Chicago, in the County of Cook and State of Illinois.

2. Defendant G. S. Rogers, doing business as Rex Duplex Fitting Company, and defendants R. W. Dusenberry and R. H. Kidd, are citizens of the United States and of the State of Pennsylvania, residing and having a regular and established place of business at Pittsburgh, Pennsylvania. Each of said defendants is within the jurisdiction of the United States District Court for the Western District of Pennsylvania, where they have jointly and severally committed acts of infringement of plaintiff's rights, of which complaint is made herein.

3. This Court has jurisdiction by reason of the fact that this is a suit in equity, arising under the patent laws of the United States, and plaintiff has no adequate remedy at law.

4. Plaintiff alleges, upon information and belief, that Arthur V. Gullborg, a citizen of the United States, being, [fol. 7] prior to December 21, 1918, the original, first and sole inventor of certain new and useful improvements in Lubricating Means, filed and prosecuted lawfully an application for United States patent therefor, and having complied in all respects with the statutes and the rules of the Patent Office, United States Letters Patent No. 1,307,734 was granted, lawfully and issued, pursuant to said application, on June 24, 1919.

5. Said invention of Arthur V. Gullborg was new, useful, not known or used by others in this country before his invention, not patented or described in any printed publications anywhere before his invention or more than two years prior to his application, not in public use or on sale in this country for more than two years prior to his said application for letters patent, not patented in any country by him or his legal representatives on applications filed more than one year before his said application in this country, and not abandoned. Said patent is now in full force and is hereby proffered and ready to be produced before the court.

6. Prior to the commencement of this suit, plaintiff became by lawful assignment duly recorded in the United

States Patent Office, and now is the sole owner of said United States patent No. 1,307,734, and of all rights thereunder, and of all rights of action for infringement thereof. Profert is hereby made of the original instruments upon which plaintiff's title is based.

7. The invention patented by said patent No. 1,307,734 is [fol. 8] a great utility and is of great value to the plaintiff and of great benefit to the public. Plaintiff and its predecessors have sold very extensively and introduced into public use, devices in which said patented invention is embodied, and the public and manufacturers have demanded and purchased from plaintiff and its predecessors such devices embodying said invention in very large and in very rapidly increasing quantities.

8. Plaintiff and its predecessors have marked all devices embodying said inventions made or sold by them in full compliance with the United States statutes.

9. The public has, in general acknowledged the validity of the aforesaid patent No. 1,307,734, and has respected plaintiff's rights therein and thereunder.

10. Heretofore, to-wit, on September 17, 1925, The Bassick Manufacturing Company brought a suit against Montgomery, Ward & Company, Inc., in the United States District Court at Chicago, Illinois, and thereafter The Larkin Automotive Parts Company of Dayton, Ohio, intervened in said suit and became a party defendant therein. The said suit came on for final hearing before his Honor, Judge Walter C. Lindley, upon Gullborg patents Nos. 1,307,733 and 1,307,734 and Zerk patent No. 1,475,980, and the court, after hearing the evidence offered in behalf of both sides and upon briefs, rendered an opinion and entered a decree sustaining the said patents and finding them infringed. An appeal was taken by the defendants and argued in due course before the United States Circuit Court of Appeals [fol. 9] for the Seventh Circuit, which in due course handed down an opinion affirming the decree of the District Court, as shown by the report in 19 Fed. (2d) 944.

11. The validity of the said Gullborg patent No. 1,307,734 was sustained and the patent found infringed by the United States Circuit Court of Appeals for the Sixth Circuit in certain appeals which were pending before and decided by

it on March 18, 1927, as reported in 18 Fed. (2d) 29. As appears in the said opinion, claim 12 of the Gullborg patent No. 1,307,734 was found invalid, and thereafter, to-wit, on August 29, 1927, in full compliance with the statutes relating to disclaimers, a disclaimer of claim 12 of said Gullborg patent was filed in the United States Patent Office.

12. The validity of the said patent No. 1,307,734 was sustained and the patent found infringed by the United States Circuit — of Appeals for the Second Circuit in the case of The Brassick Manufacturing Company vs. Adams Grease Gun Corporation, in an opinion filed by the court on July 14, 1931, as reported in 52 Fed. (2d) 36.

13. Plaintiff alleges, upon information and belief, that defendants, jointly and severally, in violation of plaintiff's rights under said patent No. 1,307,734, without any authority since the issuance of said patent, and within six years before the commencement of this suit within the District aforesaid, and elsewhere within the United States, have [fol. 10] threatened to infringe and have infringed said patent No. 1,307,734 by making and/or using and/or selling lubricating apparatus embodying said patented invention, and by making and/or using and/or selling devices designed and intended for use in apparatus embodying said patented invention. Because of defendants' joint and several infringement and defendants' joint and several threats to continue to commit acts in violation of plaintiff's rights and in infringement of plaintiff's patent, plaintiff has been and will be greatly and irreparably damaged, and defendants jointly and severally are about to obtain large profits which in equity will belong to plaintiff, the amount of which damages and profits plaintiff cannot ascertain except by an accounting.

Plaintiff, therefore, prays:

(a) That defendants be required to answer this bill of complaint, but not under oath, answer under oath being hereby expressly waived.

(b) That the court grant a preliminary injunction pending this suit, and a permanent injunction enjoining and restraining the defendants, jointly and severally, their agents, employees, associates, confederates and consignees, or any of them, from making and/or using and/or vending the

combinations patented in said patent, or any of the parts thereof, or any other device or devices embodying, or adapted or intended for use in apparatus embodying the invention claimed in said patent, or adapted to be used in systems or combinations embodying the same, either for original equipment or for replacement under the guise of "repairs" or otherwise, and from offering or advertising [fol. 11] so to do, and from aiding or abetting or in any way contributing to the infringement of said patent.

(c) That this cause be referred to a Master to take and report an account of the damages and profits accruing from defendants' joint and several infringement of said patent, and that plaintiff have judgment for the damages and profits so found and for the costs of this suit.

(d) That plaintiff have such other and further relief as equity may require.

Alemite Corporation, by J. E. Otis, Jr.; Smith, Buchanan, Scott and Gordon, Solicitors for Plaintiff; Williams, Bradbury, McCaleb and Hinkle, Counsel for Plaintiff.

Duly sworn to by J. E. Otis, Jr. Jurat omitted in printing.

[fol. 12] IN UNITED STATES DISTRICT COURT

ANSWER BY G. S. ROGERS AND R. W. DUSENBERRY—Filed Sept. 9, 1932

G. S. Rogers, doing business as Rex Duplex Fitting Company, and R. W. Dusenberry, certain defendants in the above-entitled cause, for answer to the bill of complaint of Alemite Corporation, for themselves, answer as follows:

I. Defendants admit the allegations of paragraph I of the bill of complaint, and the corporate status of plaintiff, as alleged in said paragraph.

II. Defendants admit the allegations of paragraph II as to themselves only, but deny that they have committed, either jointly or severally, any acts of infringement of plaintiff's patent rights, as alleged in the bill of complaint.

III. Defendants admit the allegations of paragraph III of the bill of complaint.

IV. Defendants admit the allegations of paragraph IV as to issue of the Letters Patent in suit No. 1307734, but deny [fol. 13] that the said Arthur V. Gullborg was the original, first and sole inventor of any broadly new and useful improvements in lubricating means, but on the contrary such improvements as are covered by the claims of said Letters Patent are specifically limited by their own terms and by the prior art to means essentially different in construction and operation from anything ever made, sold or used by these defendants.

V. Answering paragraph 5, defendants admit novelty, usefulness and utility of the specific features of invention covered by the claims of said Letters Patent No. 1307734 relied on in this suit, but deny that such novelty, usefulness or utility of said features is in any respect necessary or essential to successful operation of lubricant-applying mechanism, insofar as the improvement covered by said claims refers to bayonet joint construction or suction-actuated means for removing excess lubricant.

Answering further, defendants say that the described construction and operation of the alleged invention of said Letters Patent is so inaccurate, misleading and vague, and not sufficiently full, clear, concise and exact as to properly or sufficiently inform the public of its correct construction and operation.

VI. Answering paragraph 6, defendants admit that plaintiffs have proper title to the Letters Patent in suit No. 1307734.

VII. Defendants have no accurate knowledge of the facts alleged in paragraph 7; deny the same; and leave plaintiff to its proofs if the same is material.

[fol. 14] VIII. Defendants have no accurate knowledge of the facts alleged in paragraph 7; deny the same; and leave plaintiff to its proofs if the same is material.

IX. Defendants deny that the public has in general acknowledged the validity of Letters Patent No. 1307734 or has respected plaintiff's alleged rights therein and thereunder, but say that on the contrary various parties in and

throughout the United States have denied such validity and alleged exclusive rights under said patent.

X. Answering paragraph 10, defendants admit the facts therein alleged as to litigation under the particular patent in suit No. 1307734, also patent No. 1307733 of Gullborg, and 1475980 of Zerk, as reported in 19 Fed. (2d) 944, and that said decision established validity and infringement of claims 1, 2 and 6 of Gullborg patent No. 1307734 as to the particular defendants involved and the defense presented in that case. Defendants deny however that the construction involved in that litigation was the same as that complained of herein, and deny the bearing of the same, except as to validity.

XI. Defendants admit the allegations of paragraph 11 of the bill of complaint as alleged, but deny that any constructions referred to in either of the cases involved were similar to the construction of defendants' apparatus complained of herein.

XII. Defendants make the same answer to paragraph 12 of the bill of complaint.

[fol. 15] XIII. These defendants deny all of the allegations of paragraph 13 of the bill of complaint, or that they have infringed any claim or claims of Letters Patent No. 1307734 by either making, using or selling lubricating apparatus embodying said patented invention, or in making or using or selling lubricating devices designed and intended to be used in apparatus embodying said patented inventions, or that they have threatened or now threaten to commit acts of infringement in violation of plaintiff's rights or in violation of plaintiff's said Letters Patent, but always have been and are now fully respecting all lawful rights of plaintiff under and by virtue of said Letters Patent.

XIV. These defendants further answering say that they have never manufactured, sold or used fittings of any kind or any substitute for fittings like those of Gullborg patent No. 1307733 referred to in paragraph 10, nor have they ever made, sold or used any hose and coupling for fittings in which there was a slidable perforated sealing disk, or a sealing disk that was spring-pressed toward the outlet or slidable backwardly when coupled with a fitting, or that was

movable at all in the hose nozzle or coupling whereby any suction effect would result when uncoupled from a fitting, nor with any inclined bayonet slot adapted to draw the hose nozzle towards or against the fitting, and that defendant has not made or sold any hose with a coupling that is not adapted for use in connection with any other hose couplings or fittings of the prior lubricating art, as appears herein, and defendant has made and sold no lubricating [fol. 16] means not lawfully justified by the prior art, as disclosed in the following Letters Patent and publications:

United States Letters Patent

No. 8,251, patented July 29, 1851, to Aaron Richardson, of Bellows Falls, Ver.;

No. 249,194, patented Nov. 8, 1881, to Matthew R. Marks and Alfred Iverson, of Orlando, Fla.;

No. 456,295, patented July 21, 1891, to George Stedman, of New York, N. Y., and David R. Stedman, of Elizabeth, N. J.;

No. 947,807, patented Feb. 7, 1910, to John W. Faessler and Luther K. Smith, of Moberly, Mo.;

No. 950,263, patented Feb. 22, 1910, to Fred H. Harpster, of Hazleton, Pa.;

No. 1,017,654, patented Feb. 20, 1912, to Gerald de Grey, of Philadelphia, Pa.;

No. 1,117,762, patented Nov. 17, 1914, to Albert M. Barcus, of Raymond, Wash.;

No. 1,141,101, patented June 1, 1915, to Matthias G. Brown, of Gulfport, Miss.;

No. 1,150,420, patented Aug. 17, 1915, to William W. Davis and William Jaeschke, of San Francisco, Cal.;

No. 1,201,414, patented Oct. 17, 1916, to Frank D. Winkley, of Madison, Wis., on application filed May 1, 1916;

[fol. 17] No. 1,205,686, patented Nov. 21, 1916, to Henry Uhl, of Albany, Ore., on application filed Jan. 20, 1916;

Re No. 14,667, patent reissued June 10, 1919, to Frank D. Winkley, of Madison, Wis.;

No. 1,307,733, patented June 24, 1919, to Arthur V. Gullborg, of Chicago, Ill., on application filed Feb. 11, 1918;

British Letters Patent

No. 6940 of 1904, published in 1904, to Thomas Clarkson, for Pipe Joints;

No. 21,893, of 1906, published 1907, to Stephen Evans Alley and George Woodvine;

No. 26,134, of November 1912, published 1913, to William Charles Sharpe, Jr., for Coupling Device;

No. 3028, of 1915, published 1916, to Camille Seng, for Pipe Joint;

No. 121,863, of Mar. 1, 1918, published Jan. 1919, to James Pitkin & Co. and Alfred Frederick Allen, for Pipe Coupling;

No. 172,763, of 1920, published 1921, by Henry Thomas Roberts;

French Letters Patent

No. 468,869, of 1914, published July 18, 1914, to Camille Seng, for Pipe Joint;

No. 20,083, patent of Addition, of 1914, published Mar. 22, 1916, to Camille Seng, for Pipe Joints;

[fol. 18] German Letters Patent

No. 6118, published Nov. 1878, to Wilhelm Bitter, for Lubricating Means.

Other Publications

"Amnia," a magazine published April 25, 1914, in France and in the United States, on page 258, in an article entitled "Inventions nouvelles. . Raccord Instantane, Systeme Seng, Pour le Graissage a la Graisse Consistante"; also the following other

United States Letters Patent

No. 241,500, patented May 17, 1881, to Matthew R. Marks and Alfred Iverson, of Orlando, Fla.;

Re. No. 10,064, reissued Mar. 21, 1882, to Smith A. Skinner, of Hoosick Falls, N. Y.;

No. 615,623, patented Dec. 6, 1898, to Thomas A. King, of Jersey City, N. J.;

No. 617,591, patented Jan. 10, 1899, to Ernest A. Miller and Theodore E. Christman, of Jackson, Mich.;

No. 623,135, patented Apr. 18, 1899, to Gaston E. Cordeau, of New York, N. Y.;

No. 793,869, patented July 4, 1905, to Andrew H. Anderson, of Kellogg, Idaho;

No. 810,959, patented Jan. 30, 1906, to Howard C. Marmon, of Indianapolis, Ind.;

No. 863,878, patented Aug. 20, 1907, to John B. Reimund and Joseph W. Kyle, of Chicago, Ill.;

[fol. 19] No. 919,743, patented Apr. 27, 1909, to Homer R. Mason, of Wilkinsburg, Pa.;

No. 921,691, patented May 18, 1909, to Chester L. Friday, of Quincy, Ill.;

No. 947,807, patented Feb. 1, 1910, to John W. Faessler and Luther K. Smith, of Moberly, Mo.;

No. 950,263, patented Feb. 22, 1910, to Fred H. Harpster, of Hazelton, Pa.;

No. 976,787, patented Nov. 22, 1910, to William J. Donnelley, of San Francisco, Cal.;

No. 1,027,588, patented May 28, 1912, to Matthias G. Brown, of Gulfport, Miss.;

No. 1,071,890, patented Sept. 2, 1913, to John Desmond, of Chicago, Ill.;

No. 1,141,101, patented June 1, 1915, to Matthias G. Brown, of Gulfport, Miss.;

No. 1,322,357, patented Nov. 18, 1919, to Camile Seng, on application filed Dec. 23, 1915;

No. 1,337,408, patented Apr. 20, 1920, to William L. Morris, of Chicago, Ill., on application filed Sept. 7, 1916;

No. 1,377,023, patented May 3, 1921, to Bernard S. Nelson, of New Orleans, La., on application filed June 29, 1920; and many other patents and publications whose names and dates and places of publication are at this time unknown to these defendants, but which when discovered they pray leave to insert therein by amendment to this answer.

[fol. 20] XV. These defendants further answering, say that the alleged inventions set forth in the claims of said Letters Patent, unless limited to the construction of the coupler as shown and described for co-operation with a lubricant fitting, as defined in the claims in said Letters Patent in suit, are too broad if broadly construed, and do not rise to the dignity of invention and were not legally patentable over and above what is set forth and disclosed in said prior publications and patents heretofore listed, excepting only a limited construction based on the precise form specifically claimed in claims 1, 2, 3, 4 and 8 of the Letters Patent in suit.

XVI. These defendants further say, upon information and belief that their lawful right to sell their grease guns and couplings has been established by various courts of the United States, including the United States Circuit Court of Appeals for the Sixth Circuit in interpreting the scope of the claims of said Letters Patent in Lyman Mfg. Co. v. Bassick Mfg. Co., reported in 18 Fed. (2d) 29; that in said case the court relied for novelty and invention of said Gullborg patent No. 1,307,734 upon the slidable perforated spring-pressed sealing disk in the hose nozzle and which backed away under pressure on the fitting when the coupling was effected and automatically returnable upon uncoupling so as to create a re-acting or desirable suction effect, which construction this defendant has never made, sold or used; that said court did not hold that the claims of the said patent lawfully covered a lubricating construction wherein the grease gun and hose coupling did not have the above mentioned seal- [fol. 21] ing disk arrangement, or that the patent lawfully covered the combination of an old grease gun and an old hose coupling unless used or capable of being used with the particular fitting shown in said Gullborg patent No. 1,307,733, which fitting defendant has never made or sold; that said court held said patent No. 1,307,734 to lawfully cover only a specific improvement upon the means shown and described in the re-issue patent to Winkley, No. 14,667; that it further held as outside of the scope of said patent No. 1,307,734 a stationary packing crowded against a support by an advancing screw head; that it further held that a fitting and a spring abutment as otherwise furnished by the pin is merely a common bayonet joint member which is not within the scope of said patent No. 1,307,734; that structures with pressure-produced adhesion are not within the terms of said patent No. 1,307,734 unless they also embody a suction effect; and that other courts have so held in other litigation in various jurisdictins.

XVII. Defendants further say upon information and belief that the claims relied on of said Letters Patent No. 1,307,734 in plaintiff's motion for preliminary injunction herein, are deceptive, ambiguous and uncertain of understanding if based on the alleged disclosure of the specification and drawings, and that when such ambiguity and uncertainty shall be truly, correctly and lawfully resolved by reference to the specification and drawings of said Let-

ters Patent, the antecedent negotiations in the Patent Office, and the art existing at and prior to the alleged in-
[fol. 22] vention of the subject matter of said claims in said Letters Patent, the claims of said Letters Patent can be given only such interpretation, meaning and scope that no act ever done or intended to be done by these defendants can be justly and lawfully held to involve infringement of them or either of them.

Wherefore these defendants respectfully pray that said bill of complaint be dismissed at plaintiff's cost.

Rex Duplex Fitting Company, by G. S. Rogers, Sole Owner. R. W. Dusenberry; Clarke & Doolittle, Solicitors for Defendants; Thos. N. Griggs, J. R. Van Kirk, of Counsel.

[fol. 23] IN UNITED STATES DISTRICT COURT FOR THE WESTERN DISTRICT OF PENNSYLVANIA

In Equity

No. 2677

ALEMITE CORPORATION, Plaintiff,

against

G. S. ROGERS, Doing Business as REX DUPLEX FITTING COMPANY, and R. W. Dusenberry and R. H. Kidd, Defendants

Statement of Evidence

APPEARANCES:

Messrs. Williams, Bradbury, McCaleb & Hinkle (Chicago, Ill.), By A. C. Ahlberg, Esq.

Messrs. Smith, Buchanan, Scott & Gordon (Pittsburgh, Pa.), By David E. Bollinger, Esq., for the plaintiff.

Messrs. Clarke & Doolittle, by Charles M. Clarke, Esq. and W. G. Doolittle, Esq. James Roy Van Kirk, Esq., for the defendants.

And now, to wit, Thursday, November 2, 1933, at 10:00 o'clock A. M., the above entitled case came on for hearing before Hon. F. P. Schoonmaker, Judge, at Pittsburgh, Pennsylvania.

Opening statement by Mr. Ahlberg, outlining the issue and plaintiff's position, Reply by Mr. Clarke, outlining defendants' position.

[fol. 24] Plaintiff's Proofs

Mr. Ahlberg offered certified copies of certificates of incorporation of The Bassick Manufacturing Company as Plaintiff's Exhibit 1, change of name to Alemite Manufacturing Company as Plaintiff's Exhibit 2, and change of name to Alemite Corporation as Plaintiff's Exhibit 3, and title was admitted in so far as the same is vested in Alemite Corporation.

Testimony of Don Alexander

Don Alexander, a witness for plaintiff testified as follows:

I am a resident of Evanston, Illinois and am assistant general manager of Alemite Corporation.

I identify Plaintiff's Exhibit 4 as Alemite pin type fittings manufactured by Alemite Corporation and state that the purpose thereof is to lubricate bearings of automobiles and other machinery; that they are applied to the bearings, screw into the bearings, and then various compressors are attached to the fittings, clamped over the fittings by means of these pins, and then lubricant is forced in by the compressors to the bearings, flushing out the old lubricant and forcing new lubricant in. And there may be a number of these fittings on the one machine, for the different bearings—wherever there is a bearing that can be lubricated with such fittings.

I identify Plaintiff's Exhibit 5 as an Alemite Compressor, hose and coupler which is used to develop high pressures by screwing down on the handle to conduct the lubricant from the compressor through the hose and coupler, and [fol. 25] through the fittings to the bearing.

I recognize Plaintiff's Exhibit 6 as an Alemite service compressor having a hose and coupler identical with that of Plaintiff's Exhibit 5. This compressor is sold to garages, service stations, fleet owners and other places where they lubricate a large number of bearings, providing larger capacity and perhaps higher pressures than are obtainable with a smaller outfit.

The fittings of Plaintiff's Exhibit 4 bear the patent marking "Alemite, made in U. S. A. Patented 6/24/1919," and the compressor and coupler outfits are also marked, those of Plaintiff's Exhibit 5 bearing the legend: "Alemite Lubricator, Manufactured by Alemite Corporation, Chicago. Patented 6/10/19, 6/24/19, 2/26/24, Patents Pending," and Plaintiff's Exhibit 6 bears the legend "Alemite Gat-Gun. Registered in United States Patent Office, Patent Nos. 1,307,-734, 1,365,986, 1,366,381, 1,377,023, 1,619,126, Reissue 1,314,-667, 1,475,980, Re 16,787, 1,637,612, 1,603,916, 1,692,423, Patents Pending."

Our company sells Alemite pin fittings directly to the car manufacturers. They are installed on automobiles by the car manufacturers. We also sell these to our distributors, who in turn sell them to dealers and garage owners, service station owners, who use them in replacing broken and worn fittings on automobiles at the time automobiles come in for lubrication.

Our company has been manufacturing and selling compressor and coupler outfits like Exhibits 5 and 6 since 1919, sold under the trademark "Alemite."

[fol. 26] Prior to the advent of the Alemite system, there were two different types of lubricating means. One of these was grease cups, and the other oil cups. These grease cups had a threaded member which was screwed into bearings, the cup portion was then filled with grease and turned down, the idea being to force the grease into the bearings. Plaintiff's Exhibit 8 shows such a grease cup.

The oil cups of Plaintiff's Exhibit 9 were in use prior to the time that the Alemite system came into vogue. These cups were screwed into the bearings of automobiles, and then the cup portion was filled with oil, the idea being that the oil would flow down into the bearings. Light oil was used. This was unsatisfactory, because the oil ran out of the bearings and left the bearings with no lubrication.

Ordinary oil was supplied to these oil cups by the old-fashioned oil-can like Plaintiff's Exhibit 10.

Some bearings on an automobile require angle fittings like part of those in Exhibit 4 because they cannot be reached by a straight connection.

Well, formerly there were more angle fittings sold to car manufacturers than straight fittings, but on account

of the angle fittings costing more than straight fittings, and the car manufacturers wanting to decrease the cost of their product, they redesigned their bearings to accommodate the straight fittings, and now almost all the fittings we sell are straight fittings.

Despite the fact that Alemite fittings cost more than the old-fashioned grease cups and oil cups, the Alemite equipment was adopted by car manufacturers. At the time this [fol. 27] suit was commenced, in October 1932, the Chevrolet Motor Car Company was the largest user in 1932. Cadillac Motor Car Company; the Hudson Motor Car Company and many others used Alemite as standard equipment.

Plaintiff's Exhibit 11 correctly represents the construction of an Alemite pin fitting, being an enlarged model of an Alemite fitting, cut away to show the internal construction. This fitting consists of an outer shell, pin—steel pin driven through it, a spring which rests on the pin, and there is an inward flange at the top; there is a ball which is pressed against this flange by the spring. This forms a ball check at the top of the fitting.

Plaintiff's Exhibit 12 correctly represents an Alemite coupler, being an enlarged model of an Alemite coupling, cut away to show the internal construction. It consists of an outer shell, two cup leathers, a spring which is placed between the two cup leathers, and the forward cup leather resting against a shoulder in the shell, and is for use in conjunction with the pin fitting. All Alemite couplers are of this construction so they can be used on any Alemite pin type fitting.

The figures showing sales of Alemite equipment are:

Sales of Alemite Pin Fittings

1919	5,737,055
1920	16,750,611
1921	14,780,470
1922	31,444,216
1923	43,520,864

[fol. 28]

1924	33,000,000
1925	51,873,288
1926	50,636,983

1927	56,849,108
1928	73,037,766
1929	77,864,210
1930	40,495,712
1931	31,898,104
1932	16,776,397
	544,664,784

Sales of Compressors with Alemite Couplers

1919	170,000
1920	498,000
1921	438,000
1922	978,000
1923	1,460,000
1924	1,036,000
1925	1,500,218
1926	1,915,855
1927	2,137,539
1928	2,095,368
1929	2,462,491
1930	1,290,257
1931	902,855
1932	487,360
	17,471,943

Sales in Dollars

1919	$707,355.00
1920	2,263,050.00
1921	1,815,702.00

[fol. 29]

1922	3,475,572.00
1923	4,141,790.00
1924	3,366,376.82
1925	3,953,371.12
1926	4,139,440.13
1927	4,831,583.84
1928	4,836,244.00
1929	4,831,103.40
1930	2,878,797.05
1931	1,970,001.58
1932	1,421,772.08

There are dozens of different types of pin fittings sold for use on different types of bearigs, bearings having different sizes of threads. There are a number of different conditions which require different types of fittings, but all the connecting ends which connect the fittings with Alemite couplers are exactly alike; they vary as to the threaded end which is adapted to be screwed into bearings.

The book, Plaintiff's Exhibit 13, is an Alemite price list showing the different products made by the Alemite Corporation, and the prices of each piece of equipment, and is published and distributed by my company. It illustrates pin fittings like Plaintiff's Exhibit 4, compressor and coupler outfits like Plaintiff's Exhibits 5 and 6, and larger and other forms of compressor outfits.

Alemite Corporation has a distributing organization, distributors are located in every state, and we sell our products to these distributors. They have salesmen covering certain territories, which they are allotted, and these [fol. 30] salesmen contact the garages and service stations, who in turn use the equipment for lubrication on automobiles and other machinery.

Originally our equipment was sold in sets, that is; there would be a certain number of fittings sold with each compressor. However, this method of selling was not satisfactory; so that today each unit is sold separately—the fittings are sold separately, and the guns are sold separately.

The Alemite distributor in Pittsburgh is The Alemite Company of Pittsburgh. Each distributor has a franchise to sell in a certain territory, and one of the provisions of this franchise is that he can sell no other product, unless the Alemite Corporation gives its approval. This approval is very seldom given, so that the distributors are dependent upon the products of the Alemite Corporation for their livelihood.

Q. Have pin fittings other than Alemite pin fittings made by your company ever been used as standard equipment on automobiles?

A. No, sir.

Q. That is, no other manufacturer has furnished pin fittings to automobile manufacturers. Is that correct?

A. That is correct, yes, sir.

Q. Mr. Alexander, I hand you a group of papers, and ask you to state, if you can, what they are?

A. This is a letterhead with the name "Rex Duplex Fitting Company, Fulton Building, Pittsburgh, Pennsylvania," at the top; below is given a list of high pressure hand guns, with the price, and also a list of Rex Duplex fittings, with the price.

[fol. 31] Q. Now, will you look hurriedly over the entire group of papers, Mr. Alexander? What I want to know is whether they are all letters or circulars of the Rex Duplex Fitting Company?

A. Yes, sir, they are all letters or circulars of the Rex Duplex Fitting Sales Company.

Q. Well, some of them are on letterheads of Rex Duplex Fitting Company, and some on the Letterhead of Rex Duplex Fitting Sales Company, are they not?

A. Yes, sir, that is right.

Q. Now, have you seen these papers before?

A. Yes, sir.

Q. Where and under what circumstances?

A. These were sent in to me by various distributors of ours, who collected them in their territories.

Q. And when was that?

A. About a year and a half ago.

Q. It was prior to the commencement of this suit, was it not?

A. Yes, sir.

Mr. Ahlberg:

I offer the letters and circulars in evidence collectively, as Plaintiff's Exhibit No. 14, and ask that they be marked ad seriatim, a, b, c, d, e, f, g, h and i.

Mr. Clarke:

If your Honor please, I object to the offer of these nine pieces of paper until they are properly identified and verified. They are self-serving documents, and nothing to [fol. 32] show—— As far as this witness is concerned, he has received them; that is all he has said—there is nothing to connect them with the original source.

Mr. Ahlberg:

I may be taking a short-cut. There are other witnesses here who can identify them, and I think there is no ques-

tion but that they emanated from the defendants' place of business.

Mr. Clarke:

Maybe there isn't, but they don't prove that on their face. I think you might offer them for identification, but not finally.

The Court:

Well, until there is some proof that the Rex Duplex Fitting Company used these papers in their business, I don't suppose they are actually admissible in evidence.

Mr. Ahlberg:

All right. I ask that they be marked for identification.

(Papers referred to marked for identification Plaintiff's Exhibits Nos. 14-a to 14-i, inclusive.)

Q. Mr. Alexander, I observe on one of these letters on the letterhead of Rex Duplex Fitting Company, it bears the date of April 23, 1932, and the name of C. H. Emery. That letter is marked for identification as Plaintiff's Exhibit 14-i. Do you know a Mr. Emery?

A. I know a Mr. Emery, yes, sir.

Q. Who was he?

A. He was a man against whom we had a suit—or rather, the Government had a case, in Detroit.

[fol. 33] Q. Well, is he the Carl H. Emery who was indicted by the United States District Court at Detroit for manufacture and sale of so-called spurious Alemite fittings, with the Alemite trade-mark and patent date applied to them?

A. That is the Mr. C. H. Emery I am speaking of, as the man that I know.

Mr. Ahlberg:

I offer in evidence, as Plaintiff's Exhibit No. 15, a certified copy of the indictment of Carl H. Emery, and a certified copy of the sentence of Judge O'Brien in that case.

Mr. Clarke:

I cannot see the point of any such offer, if your Honor please, in this case. Whatever Mr. Emery may have been

guilty of in some other transaction does not seem to me to have any bearing whatever here. I object to the offer of this exhibit.

The Court:

I cannot see the connection between that indictment and the charges in the bill of complaint in this case. Can you point that out to me?

Mr. Ahlberg:

I think it will be apparent a little later. I can explain what my position is now, your Honor.

The Court:

Well, in view of the objection, I suppose we had better pass on it now.

[fol. 34] Mr. Ahlberg:

Well, the point is this: There have been a great many of these Alemite cases,—not only cases involving the issues of infringements, as does this one, but a good many people have manufactured and sold so-called "gyp", or spurious, or bootleg fittings, which have been identical to the plaintiff's product, even going so far as to apply the Alemite trademark and patent date to these spurious devices. The purpose of this offer is to show that the defendants Rogers and Dusenberry employed Mr. Emery to sell the defendant's equipment. I think that the inference that the Court must draw is that the defendants wanted Mr. Emery to sell these defendants' equipment to the customers that he was accustomed to sell these spurious fittings. Now, I think that is important on the question of contributory infringement, because these spurious fittings are sold for use in conjunction with Alemite compressor and coupler outfits and for use in conjunction with compressor and coupler outfits such as the defendant makes.

The Court:

Well, what Emery did as an employee of the defendant company in the matter of selling, or offering for sale, alleged infringing devices, fittings, is of course evidence; but I do not just see the connection between such evidence

and the fact that this man was indicted and entered a plea of guilty in the United States Court in Michigan, and I cannot just see the evidential value, so far as this case is concerned, of that evidence.

[fol. 35] Mr. Ahlberg:

Well, I had hoped to show by another witness that Mr. Emery sold these Rogers or Rex fittings to the same trade as he sold these—

The Court:

Well, whatever evidence you have as to what Emery did with reference to the sale of infringing fittings is, of course, evidence; but what evidential value has the indictment and sentence of the District Court of Michigan on the issues of this case? They are not conclusive, as I look at it, except for the fact that the man committed an offence and was sentenced for it. They might be offered if Emery were offered as a credible witness, for the purpose of affecting his credibility; but to prove the main issues in this case, I do not see that they have any evidential value at all. They are objected to, and we sustain the objection.

Cross-examination.

Alemite does not own any service stations but sell to distributors operating under a franchise from us; they in turn sell independent service stations or service stations owned by oil companies. These service stations buy complete equipments including the fittings and the pumps.

Fittings are sold independently and are usable because service stations ordinarily buy fittings to replace broken fittings on automobiles which come in for lubrication, and they sell them to the car owners for that purpose.

[fol. 36] It is necessary however to furnish the service stations with a pump (compressor) as well as the fitting, and this was the original practice. Alemite products were sold to replace grease cups and oil cups like Plaintiff's Exhibits 8 and 9; there was a set of fittings; one for each bearing on a car, and a compressor was sold with the fittings. This was before the time all the cars on the streets were Alemite equipped, as they are today.

In addition to the grease and oil cups, bearings had been lubricated prior to Alemite equipment by taking the bearings apart and applying lubricant with a paddle.

Referring to the patent markings on Alemite equipment, I understand the number 1,307,734 on the compressor, Plaintiff's Exhibit 6, to mean that the compressor is used in combination with our coupling and our fitting to lubricate a bearing.

Testimony of Robert H. Kidd

Robert H. Kidd, a witness for plaintiff, testified as follows:

I am a millwright and live at 1817 Duffield street, Pittsburgh. I was one of the defendants in this case and consented to the entry of a decree for a permanent injunction. I also executed an affidavit on September 19, 1932, for use upon plaintiff's motion for a preliminary injunction in this case.

I was a salesman for the co-defendants G. S. Rogers and R. W. Dusenberry from the middle of January, 1932, to shortly after August 1, 1932, and called on garages, service stations and different manufacturers of machinery where they use grease equipment.

[fol. 37] I sold Rex compressor and coupler outfits like Plaintiff's Exhibit 16, some of which I bought and paid for outright, and some I received commission on the sales.

I did business with Mr. G. S. Rogers and Mr. Dusenberry and the equipment was delivered to me at the office in the Fulton Building, Pittsburgh. When I paid for this equipment, I paid Mr. Dusenberry, never Mr. Rogers. Other times they would send the checks; and again, I would take guns and fittings from my pay.

The fittings of Plaintiff's Exhibit 17 are the type of fittings I sold for Rex Duplex Fitting Sales Company, meaning Mr. Dusenberry, and Mr. Rogers, under the name of Rex Duplex Fitting Company, as near as I can understand. They were all located in a large office in the Fulton Building.

I sold equipment like Exhibit 17 to others.

Q. Did you receive a commission on any sales that you made?

A. I did.

Q. You had some arrangement whereby you were to be paid a commission on sales?

A. Yes, sir.

I did not sell lubricating equipment other than compressor and coupler outfits of Exhibit 16 and fittings of Exhibit 17.

Q. Now, what, if any, instructions did you receive from your employers with reference to the sale and use of equipment like Plaintiff's Exhibit 16?

A. I was instructed by Mr. Rogers—G. S. Rogers—and [fol. 38] Mr. Dusenberry to sell to garages, service stations and manufacturers of different kinds of machinery where they use lubricating equipment for use on—they could be used with any standard make compressior and hose and coupler, or the Rex compressor, hose and coupler.

Q. Now, this Plaintiff's Exhibit 16 is the Rex compressor and coupler outfit?

A. Yes, sir.

Q. Now, how was that to be used, according to your instructions?

A. To be used on——

Q. Wait a minute. I call your attention to a group of fittings of Plaintiff's Exhibit No. 4, a group of Alemite fittings. Were your instructions to sell this Rex compressor and coupler outfit of Plaintiff's Exhibit 16 in conjunction with fittings like Plaintiff's Exhibit No. 4, Alemite fittings?

A. I could sell the compressor outfit separate, or I could sell the fittings separate, either way, it didn't matter which way.

Q. Well, did you have any instructions with reference to the use of the Rex compressor and coupler outfits for use with Alemite fittings?

A. I was told that it could be used with the Alemite equipment or the Rex equipment, either one.

Q. Well now, with reference to the Rex fittings of Plaintiff's Exhibit 17, did you have any instructions with reference to the use of those fittings in conjunction with Alemite compressor and coupler outfits like Plaintiff's Exhibit 5?

A. Yes; I was instructed that they could be used for the [fol. 39] Alemite compressor outfit or the Rex, either one.

Q. Now, from whom did you get your instructions with reference to the sale of the Rex equipment?

A. Mr. Dusenberry and Mr. Rogers.

I sold fittings alone to Kaufmann's Department Store in Pittsburgh which has a fleet of trucks equipped with Alemite fittings, and said Rex fittings were put on the trucks and used in the same way as Alemite fittings.

Q. Do you know what kind of lubricant compressors and couplers Kaufmann's used for putting grease in the bearings?

A. Well, it wasn't Rex; I didn't sell them the Rex equipment. It was the Alemite or some other standard make.

I also sold a small order of fittings only, to Wade Service Station at Sixth and Forbes, where they service automobiles with this high-pressure Alemite lubricating system, including large and small guns, all of which terminte in a coupler like Plaintiff's Exhibit 5.

Q. Did you sell any Rex compressor and coupler outfit to the Wade Service?

A. I sold a few.

Q. I mean to Wade's?

A. No, I did not.

Q. Now, you sold some fittings to Equitable Auto Company, did you not?

A. Equitable Auto, Snyder Doughnut Company, and the City of Pittsburgh.

[fol. 40] Q. What did you sell to Equitable Auto, for example?

A. I sold fittings, different types. I am not sure how many different kinds I sold to them, but I sold some to them.

Q. You sold fittings alone, did you?

A. Yes.

Q. What, if any, compressor equipment did you sell?

A. To——

Q. To Equitable Auto?

A. No, I didn't sell any.

Q. You didn't sell any compressors to Equitable Auto. Do you know what Equitable Auto Company did with the fittings you sold to them?

A. Why, they bought them for their automobiles or trucks, or whatever they use. The man that bought them from me told me that is what he wanted them for.

Q. Were you restricted in any way in your authority to sell Rex compressor and coupler outfits?

A. No, sir.

Q. That is, you sold them to service stations, garages, dealers?

A. Service stations, garages.

Q. Fleet owners?

A. Fleet owners; any place I could make a sale.

Q. Sometimes you sold fittings alone?

A. Yes, sir.

Q. And sometimes you sold compressors and couplers alone?

A. Yes, sir.

Q. That is, when you sold fittings alone, you understood, [fol. 41] did you not, that the fittings were to be used in conjunction with Alemite compressor and coupler outfits, like Plaintiff's Exhibit 5?

A. Yes, sir.

Q. And when you sold the Rex compressor and coupler outfit, like Plaintiff's Exhibit 16, you understood that they were to be used in conjunction with Alemite fittings, like Plaintiff's Exhibit 4 fittings?

A. I did.

Mr. Van Kirk:

Object to, as repetition. He has testified to that two or three times.

The Court:

Yes; it has been discussed quite a bit.

I made daily reports to Rogers and Dusenberry of my efforts to sell Rex equipment and they sent follow-up letters to the parties called on and the ones I made sales to.

Q. Will you look at this exhibit, Plaintiff's Exhibit 14, marked for identification, letters marked "a" to "i" inclusive, and tell us, if you can, what they are?

A. This is a price list——

Q. Mr. Kidd, look at them generally and tell us what they are, will you?

A. It is a form of letter that they sent out to the different firms, the jobbers and the trade.

Q. By "they" whom do you mean?

A. To garages and service stations.

Q. Now, have you seen letters and papers like that before?

A. Yes.

[fol. 42] Q. Where did you see them?

A. In Mr. Dusenberry's office in the Fulton Building.

Q. In the Fulton Building?

A. In the Fulton Building, yes, sir.

Q. And were letters and circulars of that type sent out by mail?

A. Yes, sir.

Q. These letters and circulars refer to Rex equipment which has been identified here as Plaintiff's Exhibits 16 and 17, do they not?

A. Yes, sir.

Q. Did you see quantities of those letters and circulars in that office in the Fulton Building?

A. I did.

Mr. Ahlberg:

I offer the letters previously marked for identification in evidence as Plaintiff's Exhibit No. 14, being numbered 14-a to 14-i, inclusive.

Mr. Clarke:

I still object, if your Honor please, to these exhibits, as not having been proved by this witness. As far as he has gone is to say that he has seen other letters similar to these, he has not said he had anything to do with the sending of these letters, or anything that he ever saw.

The Court:

Well, he said that they were sent out from that office; I understood him to say that—that similar circulars and price [fol. 43] lists were sent out from that office.

Mr. Clarke:

Similar circulars; but he has not said anything particularly connecting these ones that are offered here.

The Court:

Well, he has said they are similar circulars to ones he saw sent out from the office. Of course, he has given no evidence as to the place where these particular papers were taken from, who had them. But I think they are admissible in evidence in connection with his testimony that they are

simliar to circulars that were sent out from the office of the Rex Duplex Fitting Company. We will admit them for that purpose.

(Here the witness identified the signature "R. W. Dusenberry" on Plaintiff's Exhibit 14-h as being that of Mr. Dusenberry.)

Q. Will you look at this paper and state, if you can, what it is (handing paper to witness)?

A. This is a letter that was given to me by either Mr. Rogers or Mr. Dusenberry, I am not certain which one it was; and this is what led up to the sale that I made to the Equitable Auto Company.

Q. That is a short letter; will you read it, Mr. Kidd?

A. "Oakmont, Pa., April 4, 1932. Universal Lubricating Systems, Inc., Fulton Building, Pittsburgh, Pa. Attention Miss Born. Gentlemen: Kindly have a representative call at the Duquesne Light Company Wednesday. Have him ask for Mr. Hollinger. Yours very truly, Universal Lubricat-[fol. 44] ing Systems, Inc., (signed) E."

Q. Now, you received this letter either from Miss Born—B-o-r-n, or Mr. Rogers, in the office of——

A. Mr. Dusenberry.

Q. In the Fulton Building?

A. In the Fulton Building.

Q. And you were instructed to call on the Duquesne Light Company?

A. Yes.

Q. Is that the same as the Equitable Auto Company?

A. I think it is a subsidiary of the Dusquene Light Company. I think that is——

Q. Anyway, they all have their purchasing departments in the same office?

A. Yes; the same one buys for three or four companies.

Q. And it was the result of this letter of April 4, 1932, that you called on the Duquesne Light Company, or its subsidiary, the Equitable Auto. Is that right?

A. Yes, sir.

Q. Will you look at this paper and tell us, if you can, what it is, Mr. Kidd (handing same to witness)?

A. That is an agreement that Mr. Dusenberry made with me in regard to oil company sales and other sales that I made.

Q. That is a short letter; will you read the whole of it?

A. "Rex Duplex Fitting Company, Fulton Building, Pittsburgh. January 27, 1932. Mr. Robert H. Kidd, 1817 Duffield Street, Pittsburgh, Pa. Dear Sir: We agree to [fol. 45] give you, as one of our salesmen, ten per cent on all oil companies' orders for our goods that you sell, and the same on all repeat orders of said companies. Other sales, as per Rex price list and agreement. Yours truly, Rex Duplex Fitting Sales Company, per R. W. Dusenberry."

Q. Is that a letter that you received on or about the date it bears?

A. Yes, sir.

Q. Will you look at these papers and state, if you can, what they are (handing same to witness)?

A. This is Rex Duplex Fitting price list that they give out to different salesmen. It quotes the different prices of the different articles.

Q. That applies to the first of the two sheets that I have handed you, does it not?

A. That is "Terms: Net Cash on delivery to small unrated accounts. To large well-rated accounts, the salesman may accept orders for direct shipment on open account"——

Q. Just a minute. You said that was the price list, did you not?

A. Yes.

Q. That is, the first sheet is the price list. Is that right?

A. Yes.

Q. What is the second sheet?

A. "Types of Prospects to Contact. Group No. 1: Large fleet owners"——

Q. Just a minute; I didn't ask you to read it. What is the second sheet?

A. Ones to contact.

[fol. 46] Q. It is some of the sales literature, is it?

A. Yes. This was given out to salesmen.

Q. And have you seen those papers before?

A. Yes.

Q. Where?

A. In the office in the Fulton Building.

Q. In the office of——

A. Mr. Dusenberry.

Q. Will you look at this paper and tell us, if you can, what it is (handing paper to witness)?

A. This is a copy of a letter that Mr. Dusenberry sent to Mr. C. Hahn, in the City Court House.

Q. What is the date of that letter?

A. July 22, 1932.

Q. Had you called on Mr. Hahn in an effort to sell him lubricating equipment?

A. I have; for fittings to be used on airplanes out at either the Municipal Airport or Bettis Field, I am not sure which it was.

Q. And Mr. Dusenberry gave you a copy of that letter on or about that date?

A. Yes, sir.

Q. July 22, 1932?

A. He did. Shall I read it?

Q. No. It was given to you as being a copy of a letter that Mr. Dusenberry had written to Mr. Hahn, following up your interview with him. Is that right?

A. Yes, sir.

Mr. Ahlberg:

I offer the letter in evidence, and ask that it be marked [fol. 47] Plaintiff's Exhibit 19.

Mr. Clarke:

I object to this offer of Exhibit 19. It is a mere copy, and alleged to be a copy of an original letter; secondary evidence.

The Court:

That is true; but by the testimony of this witness this is a letter that was given to him by Mr. Dusenberry, and as such I think it has some evidential value as a reference to the business that they were carrying on. We overrule your objection.

Mr. Clarke:

I didn't quite understand that it was as your Honor stated. I understood it was a copy given to this witness.

The Court:

This witness testified that this paper was given to him by Mr. Dusenberry as a copy of a letter which Dusenberry had written to the prospect upon whom this witness called.

Cross-examination:

By Mr. Van Kirk:

When I started with the Rex Duplex Fitting Sales Company about the middle of January, 1932, I talked with Mr. Rogers or Mr. Dusenberry, I am not certain which one I talked with first. Mr. Dusenberry set the prices of the fittings and compressor outfits which were changed at different [fol. 48] times and I had a good bit of leeway on my sales.

Q. Well, now, isn't it a fact, Mr. Kidd, that you bought this equipment outright and took it out to your home and sold it from your home?

A. Some equipment I paid for at the time; other equipment I sold and the company delivered the goods, and the checks come in to the company, and they paid me a commission.

Q. You say the company delivered it?

A. They sent some of it; I don't know whether they sent it through the mail or if they delivered it.

Q. What company?

A. The City of Pittsburgh, they delivered—I know of one order they delivered to the City of Pittsburgh.

Q. Who did?

A. The Rex Duplex Fitting Company—Sales Company; because I got the check for it.

Q. Isn't it a fact that they made a certain price to you for this equipment, and that you in turn went out and sold it for whatever price you could get, and that was the amount you got as your commission that you talk about, over and above the purchase or cost price to you?

A. I just followed instructions; they told me to go out and sell it, and they had a price list there, but they left it pretty much up to me what I sold it for.

Q. The price list was what you paid for it, wasn't it?

A. Well, the price list—the price that I was supposed to sell it for, that is, the big companies; and the smaller com- [fol. 49] panies, I was supposed to charge them other prices.

Q. Now, you talk about salesmen. Who were the salesmen of this company?

A. Well, at one time they had about twenty-five extra salesmen, other salesmen besides myself.

Q. Well, name some of them.

A. Well, as far as the names are concerned, I can't name them, I don't know them. They had twenty-five men there—

about twenty-five or thirty men there one day, and he give them all slips like I just showed you here, and he started them out with fittings, grease guns.

Q. You recall—you say they started a sales campaign. Was that it?

A. Yes, sir.

Q. Do you recall meeting one Tuesday night at the office of the Rex Duplex Fitting Company, or Sales Company, with a bunch of salesmen?

A. Yes, I do; I remember one. I am not certain about if it was a Tuesday night or what night it was.

Q. Well, do you remember my being present?

A. I was at a couple of meetings that you were present; I don't know which one you refer to.

Q. Do you remember my saying to you people at that time to sell the fitting and coupler in combination?

A. I don't know what your instructions were.

Q. Well, you were there, you say.

A. I was at one or two meetings that you were present, but I don't know——

Q. But you don't know what I said?

A. *I don't recall your saying that now.*

[fol. 50] Q. Well, I might have said it, might I not?

A. I don't question that you said it; you may have said it.

Q. But if I did, you didn't hear it?

A. No, I didn't.

Q. You tried to sell—or did you offer to sell the fitting and coupler in combination to any concern or concerns?

A. I sold them both separate and together, as I was instructed.

Q. Who instructed you?

A. Mr. Dusenberry and Mr. Rogers.

Q. You remember that very specifically, but you don't remember what I said one night at those meetings that you were present. Is that right?

A. I met Mr. Rogers and Mr. Dusenberry practically every day, while I have seen you once or—a few times.

Q. But you know, when I was down there, what I was there for?

A. Yes; I heard you—something.

Q. Did you ever solicit Boggs & Buhl to sell them equipment?

A. Yes, I did.

Q. Do you recall selling a hundred fittings one night to some man who said—to some man at your own home?

A. Yes, sir.

Q. What did that man say to you?

A. He was from Boggs & Buhl——

Q. He represented he was from Boggs & Buhl. Is that right?

A. Yes, sir.

[fol. 51] Q. Who was he, in fact?

A. Mr. Ulrich.

Q. Mr. Ulrich, an agent of the Alemite Company. Is that right?

A. I believe that is the name, yes, Ulrich.

The Court:

You are going somewhat out of the scope of the examination of this witness in chief in this type of questions, you are now asking this witness.

Mr. Van Kirk:

It may be a little beyond the scope, your Honor.

Mr. Clarke:

Q. Mr. Kidd, did you represent——

The Court:

Are you representing different interests, Mr. Clarke?

Mr. Clarke:

No; we are together.

The Court:

Unless it is consented to by the other side, cross-examination ought to be by one counsel.

Mr. Ahlberg:

I do object. I have heard that objection made and sustained a good many times. I think a witness ought to be confronted by only one lawyer, your Honor.

[fol. 52] Mr. Clarke:

I have just one or two other points.

By Mr. Van Kirk:

I offered the Rex coupler for use with an Alemite fitting, and also a Rex fitting for use with an Alemite coupler. I was one of the original defendants in this case and procured an attorney. Then I decided not to make a fight, because I didn't think I had committed any crime.

After I had an attorney's appearance entered, I later executed an affidavit for the Alemite Company. Mr. Ahlberg, counsel for the plaintiff, came to my house one night and I told him a true version of what I had done.

Testimony of Marvin Walkow

Marvin Walkow, a witness for plaintiff testified as follows:

I live at 228 Collins Avenue and work at Wade's, Inc., the concern which owns the service station at Sixth and Forbes Street, Pittsburgh.

I purchased fifty ⅛ straight fittings from Mr. Kidd, listed one-third off cash, ten days, and received the receipt, Plaintiff's Exhibit 21, from Mr. Kidd, dated May 16, 1932. These fittings were Rex fittings like that of Plaintiff's Exhibit 20, and were delivered to me by Mr. Kidd, who had them with him.

We lubricate automobiles and have all Alemite equipment, handle all Alemite fittings like Plaintiff's Exhibit [fol. 53] 4, and had never bought any other fittings but Alemite until the time Mr. Kidd came there. We do not have Alemite Compressors like Exhibits 5 and 6, but larger forms from the display board and have one big electric compressor. The board and guns referred to are illustrated on page 51 of Plaintiff's Exhibit 13. All our Alemite equipment has couplers like Plaintiff's Exhibit 5. We do not have any Rex compressor and coupler outfits like Plaintiff's Exhibit 16.

We placed the Rex fittings in stock and replaced damaged or missing fittings on automobiles with them, using them in the same place as we would an Alemite fitting. Lubricant was introduced into the bearings having Rex fittings with an Alemite gun.

Q. That is, you connected with the Alemite——

A. Coupler.

Q. —compressor and coupler outfit to the——

A. Fitting.

Q. —to the Rex fitting, and operated the compressor to force grease into the bearing?

A. Yes, sir.

Cross-examination.

Mr. Clarke:

Q. When did you use these fittings in that way?

A. Whenever it was necessary to use them. We may have had a fitting necessary, and we naturally had to replace it in order to lubricate that particular part of the automobile.

Q. Did you do that immediately after this purchase of fifty fittings in May, 1932?

[fol. 54] A. Well, we lubricate anywhere from five, ten to fifteen cars a day. When any particular car came in that had a fitting missing, why, we put one on.

Q. But you can't tell when you did that first with any one of these fifty fittings?

A. Well, no, I couldn't tell you that offhand. Naturally, we bought them for resale, and used them for that purpose.

Q. Had you any of the Alemite fittings in stock at that time?

A. None of that particular type, no.

Q. Is that the reason you bought these Rex fittings?

A. Yes, sir.

Q. You bought these from Mr. Kidd, didn't you?

A. Yes, sir.

Q. What did Mr. Kidd say to you as to the proposed efficiency of these fittings—anything?

A. Well, he said they were as good as Alemite.

Q. As good as Alemite?

A. As good as Alemite. In the past we had used some fittings that looked like Alemite, and they didn't prove very efficient, so we didn't like to buy anything but Alemite.

Q. Did you regard it as a legitimate transaction to purchase those fifty fittings from Mr. Kidd, in view of your previous relations with the Alemite Company?

A. Yes, I thought it was all right.
Q. It looked all right to you, did it?
A. Pardon.
Q. It looked all right to you?
A. Yes.

[fol. 55] Testimony of Edwin J. Balluff

EDWIN J. BALLUFF, a witness for the plaintiff, testified as follows:

I am a resident of Detroit, Michigan, and am the E. J. Balluff who signed an affidavit dated September 17, 1932 in support of plaintiff's motion for preliminary injunction.

On September 17, 1932, I went to the store of the Chicago Automotive Surplus Company at 2312 Cottage Grove Avenue, Chicago, Illinois, and asked Mr. C. Larson who represented himself as the proprietor, to purchase some grease fittings for use in conjunction with a lubricant compressor and coupler outfit which I had in my hand. He sold me fifteen fittings at five cents apiece. I paid for them and received a sales slip for the same, and took the fittings with me. I identify these fittings as Plaintiff's Exhibit 22.

I also identify the compressor and coupler outfit, Plaintiff's Exhibit 23, as the one I had with me and showed to Mr. Larson at the time of my purchase of grease fittings. I inserted one of the fittings into the coupler in Mr. Larson's presence. I also identify the sales slip given me by Mr. Larson when I purchased the fittings as Plaintiff's Exhibit 24.

Cross-examination.

Mr. Clarke:

Q. Mr. Balluff, you never made any purchases except this particular one from Mr. Larson, of any of these fittings?
[fol. 56] A. Of this type marked with the name that these fittings are marked. I wish you would make your question more explicit.
Q. The particular fittings that you have identified here.
A. Yes.

Q. That you bought from Mr. Larson—that was the only purchase you ever made of that particular fitting?

A. That is the only one I made, of that fitting, with Mr. Larson, or from the Chicago Automotive Surplus Company.

Q. Did you make any purchases of that same kind of fitting, so marked and identified as you have identified it, from anybody else than Mr. Larson?

A. No.

Q. Do you know where Mr. Larson got these fittings from?

Mr. Ahlberg:

I think I will object to the question. I don't see how Mr. Balluff could possibly know. I don't care whether he answers it or not, but I don't see how he could possibly know where he got them.

Mr. Clarke:

If he can't answer, he can say so.

A. I believe that I asked Mr. Larson where he purchased the fitting, and if I remember correctly, he told me that he purchased it from the Rex people—I believe is what he said.

Q. Did that mean anything to you?

A. Why, it meant to me the Rex people involved in the suit here, is what it meant to me.

[fol. 57] Q. Involved in the suit where?

A. Involved in this suit here.

Q. You knew about this suit at the time you made the purchase, did you?

A. I don't say that I knew about the suit.

Q. Now, as a matter of fact, weren't you asked or inspired to make that purchase for the very purpose of use as evidence in this case?

A. At the time I made the purchase I had no knowledge that the evidence—or the things that I purchased would be used in this case.

Q. Who asked you to make the purchase?

A. I did so at the request of the patent counsel for Alemite Corporation.

Q. You are sure of that, aren't you?

A. Yes.

Q. You had never previous to that time had any interest in purchasing anything of the same kind identified with the Rex Company?

A. No.

Testimony of Nelson Cornell

NELSON CORNELL, a witness for plaintiffs, testified as follows:

I am twenty years of age and live at Chicago, Illinois. I signed an affidavit September 16, 1932 for use upon plaintiff's motion for preliminary injunction.

I went to the Automotive Surplus Company at 2312 Cottage Grove Avenue, Chicago, Illionis, and asked to see the [fol. 58] proprietor, who I understood was Mr. C. Larson, and a person came from the rear of the store and intimated that he was the proprietor. I told him that I wished to purchase some pin fittings for use with genuine Alemite equipment, and asked if he had anything of that kind. He immediately produced a number of them and asked me how many I wanted; I told him fifty. He gave them to me, and gave me a sales slip after I had paid him for the fittings. I identify these fittings as Plaintiff's Exhibit 25 and the sales slip I received as Plaintiff's Exhibit 26.

I told Mr. Larson that I wanted the fittings for use with an Alemite coupler outfit of the type in Plaintiff's Exhibit 5.

Cross-examination.

Mr. Clarke:

Q. Did you actually want to use these fifty fittings in connection with a compressor like Plaintiff's Exhibit 5, Mr. Cornell?

A. No, sir.

Q. Well, now, what really was the reason for making this purchase of fifty fittings?

A. When I bought the fittings I told Mr. Larson that I wanted them, to be able to use them with a genuine Alemite coupler and compressor.

Q. Why did you want to use them with a genuine Alemite coupler?

A. I didn't say I wanted to use them; I say that is what I told Mr. Larson how I wanted to use the fittings.

Q. Oh, you told Mr. Larson——

[fol. 59] A. That I wanted fittings that would fit a genuine Alemite compressor.

Q. Why did you want them?

A. Why did I want the fittings?

Q. Yes.

A. I wanted them for counsel for the Alemite Corporation.

Q. For what?

A. For counsel for the Alemite Corporation.

Q. And it was at his direct request that you made this visit and this purchase, wasn't it?

A. Right.

Q. You hadn't any idea of ever using them with an Alemite pump?

A. No.

Q. And they never have been used, have they, with an Alemite pump?

A. I think they have.

Q. Where have these fifty fittings been ever since then?

A. Why, I think they have been in possession of the Court; I don't know.

Q. You do? You don't know, do you?

A. No, sir.

Q. How do you know they are the actual fifty fittings which you bought from Mr. Larson?

A. One thing, of course he knew what is inside of them; and for another thing, the fact that they are fittings that were tagged as being mentioned in my affidavit, and I thought in possession of the court.

Q. You have never seen them, though, since that day to this, have you?

[fol. 60] A. No, sir.

Q. And yet you identify them as the exactly fifty fittings which you purchased in September '32, from this Mr. Larson out in Chicago?

A. I do.

Q. And yet they are identically like fifty other fittings that have been offered here, aren't they? You can't tell them apart, can you?

A. No, sir.

Q. You made this affidavit on the 16th of September, 1932, in the case now in hearing, in connection with a motion for preliminary injunction, did you not?

A. Yes, sir.

Q. That was done at the request of counsel for the plaintiff, wasn't it?

A. Yes, sir.

Q. And that affidavit was prepared, and you signed and swore to it?

A. Yes, sir.

Q. At the request of such counsel. In that affidavit you say—referring, I suppose, to Mr. Larson: "He informed me that within the last two or three days he had sold a man who drove up in a truck 25,000 Rex fittings, and that he would be glad to fill my order for additional fittings any time." Did Mr. Larson actually make that statement to you?

A. He did.

Q. Did you believe it?

A. He made the statement.

Q. Did you believe it?

A. Why, yes.

[fol. 61] Q. You wouldn't be surprised if that statement was repudiated, would you?

A. I have no knowledge other than the fact that he told me that.

Q. Have you ever heard of any actual sales of these Rex fittings in numbers larger than the fifty which you yourselft bought—anywhere, by anybody, at any time?

A. Yes, sir.

Q. Where?

A. Mr. Larson told me he sold 25,000 a few days previous.

Q. That very thing I just read to you?

A. Right.

Q. Do you know that that sale happened?

A. He told me that it happened; he was the proprietor of the store.

Q. Do you know that that sale happened?

A. No, sir.

Q. How long had you known Mr. Larson?

A. Never saw him before that time I was there.

Q. And yet you believe that statement that he sold the twenty-five thousand?

A. I do.

Testimony of M. K. Ulrich

M. K. ULRICH, a witness for plaintiff, testified as follows:

I reside in Brentwood, Pittsburgh and am the M. K. Ulrich who signed an affidavit dated July 18, 1932 for use upon plaintiff's motion for preliminary injunction in this case.

[fol. 62] On July 11, 1932, I called at the home of Mr. Kidd and said I wanted to purchase a hundred greasing fittings for use with an Alemite compressor and coupler outfit. He said that the fittings he had, the Rex fittings, could be used with an Alemite outfit. I asked him the price, and he said the price was $6 a hundred. He also showed me a cross section of a Rex fitting, explained how it was made, and stated that they also made a 45-degree angle and a 90-degree angle fitting. The ones I purchased were ⅛-inch straight fittings.

I purchase a hundred Rex fittings. He had said the price was $6 a hundred, but he would give them to me for $5. I then asked him what the price would be in lots of five hundred, and he said $4. And he wrapped them up and gave them to me, and he said the price would be $4 for the hundred. I gave him the $4, and he gave me a receipt.

I identify Plaintiff's Exhibit 27 as the fittings I bought from Mr. Kidd, and Plaintiff's Exhibit 28 as the receipt given me by Mr. Kidd for the $4 I paid him.

Prior to my visit on Mr. Kidd, I made a short investigation to determine if Mr. Kidd was agent for Rex fittings. I recognize Plaintiff's Exhibit 29 as a copy of the East Liberty Post No. 5 Gazette, issue of June 9th, containing an advertisement stating that Mr. Kidd was the sole agent for Rex fittings and equipment. I secured this copy from the editor, and being desirous of purchasing some Rex equipment, I called on Mr. Kidd.

[fol. 63] Cross-examination.

Mr. Clarke:

Q. Why did you want this hundred fittings for use with an Alemite equipment, Mr. Ulrich?

A. I was requested to purchase them.

Q. By whom?

A. By my employer.

Q. Who was he?

A. Employed by the Pinkerton Detective Agency.

Q. Who made the request to them, do you know?

A. Mr. Hunt, the superintendent here.

Q. Do you know where the original request came from?

A. The original request came from Chicago, through our Chicago office.

Q. Did you know for what purpose these hundred fittings were to be used?

A. You say, did I?

Q. Yes.

A. No, I did not.

Q. You didn't expect to use them yourself?

A. No, I did not.

Q. You did not so state when you made the purchase?

A. No, I did not.

Q. And did you tell Mr. Kidd when you made the purchase that you were a detective?

A. Certainly not.

Q. Why "certainly not"?

A. In investigating any cases it isn't customary for a person to state that they are a detective?

[fol. 64] Q. So far as Mr. Kidd was concerned, he presumed it was a perfectly fair and legitimate transaction, did he?

A. I don't know; I presume he did.

Q. Did you say anything to him about purchasing these for use on cars of Boggs & Buhl?

A. I don't recall; I may have.

Q. Did "Boggs & Buhl" mean anything to you here in Pittsburgh?

A. Not in particular, because they are a large department store here.

Q. You know where it is?

A. Yes.

Q. And didn't you tell Mr. Kidd that you wanted them to use particularly for lubricating the trucks of Boggs & Buhl, on that occasion?

A. I said I didn't recall whether I did or not.

Q. You don't recall that?

A. No.

Q. Are the original hundred fittings in the bag which you have just identified?

A. I presume so; I didn't count them.
Q. Will you please count them and tell me?
A. I will.

The Court:

It is hardly worth while taking up the time of the court for the witness to count those fittings on the witness stand. If you want him to count them, he may do so when he leaves the witness stand, and you may recall him.

[fol. 65] Mr. Clarke:

That is all for the present then, if your Honor please.

(Witness withdrawn.)

Testimony of Thomas H. Bryson

THOMAS H. BRYSON, a witness for plaintiff, testified as follows:

I am storekeeper for the Equitable Auto Company, the transportation unit of the Philadelphia Company. The Philadelphia Company is a large public service company in this vicinity, and operates the street car company, or bus company, a fleet of cars and trucks for utility service, and also for the Light Company and Railways. The Equitable Auto Company services the equipment of these associated companies that own busses, automobiles and street cars. The Philadelphia Company has 550 to 600 cars and automobiles, passenger cars and trucks. With the exception of the Ford trucks, passengers cars and Fords, they are equipped with Alemite fittings of the kind exemplified in Plaintiff's Exhibit 4. Ford cars are equipped with Zerk fittings; at the present time, a large percentage of the Ford cars are equipped with Zerk fittings. In October, 1932 and prior to that time, about fifty per cent were equipped with Zerk fittings and fifty percent with the Alemite pin fitting type.

Q. Now, what makes of compressors does the Equitable Auto Company use in conjunction with the Alemite pin fittings?

[fol. 66] A. Well, I couldn't tell you the makes offhand, but they are all Alemite compressor. We have six service

stations in our central garage, and we have an Alemite stand out there with the bayonet type.

Q. That is, you have some Alemite guns like this Plaintiff's Exhibit 6?

A. Similar to it.

Q. Do you have any Alemite compressor outfits like Exhibit 5?

A. Yes, sir; and we have the electric guns.

Q. And you have large electric service compressors?

A. Yes.

Q. Now, do all of the Alemite compressor outfits which you have terminate in an Alemite coupler of the type that is attached to both Plaintiff's Exhibits 5 and 6?

A. Yes, sir.

Q. Has your company purchased any Rex fittings of the type identified here as Plaintiff's Exhibit 17?

A. We purchased one hundred of the ⅛ inch elbow type. This looks like it here (indicating fittings included in Exhibit 17).

Q. When was that, Mr. Bryson?

A. May 17, 1932.

Q. Do you have some papers that represent the transaction?

A. Yes, sir.

Q. What do you have? Do you have a purchase order of your company?

A. I have a purchase requisition, which is an authority on our purchasing department, requesting a certain amount of any particular item to be purchased.

[fol. 67] Q. May I see that?

A. All right. (Handing same to counsel.)

Q. Now, as I understand it, this purchase requisition which you have handed me, and which bears the date of May 9, 1932, No. 7004, is the requisition that would be issued by your stores department on the purchasing department. Is that correct?

A. Yes.

Q. And it calls for 300 ⅛ inch Alemite grease cups, elbow type, and 300 ⅛ inch elbow Zerk type grease cups. Is that right?

A. That is right.

Q. Now, you filled out this requisition, did you?

A. Yes, sir.

Q. And what did you do with it?

A. Forwarded it to the purchasing department.

Q. All right.

A. The purchasing department in turn then places out inquiries and bids on this material requested. It ended up by placing this order here—splitting this up for 100 of the Rex ⅛-inch elbow type fittings.

Q. Now the paper you have handed me is what?

A. That is the purchase order.

Q. And it is on the stationery of the Equitable Auto Company, and bears the date May 7, 1932?

A. Yes, sir.

Q. No. Q-36899. It is apparently a copy of an order to Rex Duplex Fitting Sales Company, Fulton Building, Pittsburgh, Pennsylvania, and calls for 100 ⅛-inch Rex grease cups, elbow type. Is that correct?

[fol. 68] A. Yes, sir.

Q. How did you happen to get a copy of this order?

A. I get all copies—of all orders; from my department records.

Q. Now, I notice that this purchase requisition that you discussed a few moments ago has the quantity 300 ⅛-inch Alemite grease cups changed to 200. Is there any relation between the change of the requisition from 300 to 200 and the Equitable Auto Company's order for 100 grease cups?

A. Yes, sir.

Q. What is that?

A. The order was made for 300 fittings.

Q. That is, your order?

A. Our order was. The Rex Duplex Fitting Company contacted with our purchasing department on this type fitting. They had the order for 300——

Q. Just a minute. The Rex Duplex Fitting Company contacted with your company with reference to which type of fitting—Plaintiff's Exhibit 17 we are talking about?

A. ⅛-inch elbow type.

Q. All right.

A. And they in turn, finding that the fitting was similar to Alemite, for trial gave them an order of 100.

Q. Well, did you get the fittings?

A. We got them and used them.

Q. And the fittings that you received were like this 90-degree elbow fitting (indicating)?

A. Yes, sir.

[fol. 69] Q. Which forms a part of Plaintiff's Exhibit 17?

A. Yes, sir.

Q. Now, you say you used them. When they were received were they placed in your stock?

A. Yes, sir.

Q. And how were they used?

A. Well, they were issued out on demand as the requirements were—or rather, as the request was made on them.

Q. Do the garage or service men in your employ go to the stock room and get fittings, if they need them?

A. Yes, sir.

Q. And what do they do with them?

A. They install them on the vehicle they are charged to.

Q. And do they screw the fittings into the bearings of the automobiles?

A. Yes, sir.

Q. And are those fittings used then in conjunction with the Alemite equipment that you have?

A. Yes, sir; all used in conjunction with them.

Q. And all of those Alemite compressor outfits terminate in these couplers like Plaintiff's Exhibits 5 and 6.

A. That is right.

Q. Were those fittings placed in the same bins as the Alemite fittings in your stock?

A. Yes, sir.

Q. And used interchangeably?

A. Yes.

Q. Does the Equitable Auto Company own a Rex com-

[fol. 70] pressor and coupler outfit like Plaintiff's Exhibit 22?

A. No, sir.

Q. Now, did your company pay for the fittings?

A. Yes, sir; I have the receipted check right here—It is a photostat of the original voucher.

Q. Now, this paper you have handed me is a copy of the original voucher, and it bears the date of May 27, 1932, and in the sum of $7.60?

A. That is right.

Q. Was that in payment for the 100 fittings that your company purchased as you have described in your testimony?

A. Yes, sir.

Q. Now, this voucher is made payable to the Rex Duplex Fitting Company, Fulton Building, Pittsburgh, Pennsylvania, is it not?

A. Yes, sir.

Mr. Ahlberg:

I offer in evidence as Plaintiff's Exhibit No. 30 the voucher identified by the witness.

Q. Did you receive from Rex Duplex Fitting Company any invoice on this transaction?

A. Yes, sir.

Q. Do you have that here?

A. No sir, I have not.

Q. In order to save time, may I ask: Does one of your associates have that here?

A. Mr. Wakelin may have.

Q. Will you look at this paper (handing same to witness), and tell us, if you can, what it is?

[fol. 71] A. It is an invoice for the purchase of the fittings.

Q. Well, is it an invoice from Rex Duplex Fitting Company?

A. Yes, sir.

Q. To whom?

A. To the Equitable Auto Company.

Q. And bears what date?

A. May 19th.

Q. What year?

A. 1932.

Q. And what does it call for?

A. It calls for 100 1/8-inch Rex grease cups, elbow type.

Q. Now, this invoice is in the amount of $8.00 less 5 per cent, making it net $7.60. Is that right?

A. Yes, sir.

Q. And is the check Plaintiff's Exhibit 30 in payment of this invoice?

A. Yes, sir.

Mr. Ahlberg:

I offer the invoice in evidence as Plaintiff's Exhibit No. 31. May I have leave, if your Honor please, to substitute a photostatic copy of this invoice?

The Court:

Have you any objection to a photostatic copy being substituted, Mr. Clarke?

Mr. Clarke:

No, I think not, sir.

[fol. 72] The Court:

It may be done.

Mr. Ahlberg:

You may cross examine.

Mr. Clarke:

No cross-examination.

M. K. Ulrich—Recalled

M. K. ULRICH, recalled for further cross examination, testified:

Mr. Clarke:

Q. Have you counted the fittings in the bag, Mr. Ulrich?
A. I have.
Q. And you find how many?
A. 101.
Q. The one has been added since you made the purchase?
A. I don't know.
Q. Just for good measure?
A. I counted 101. I didn't count them when I purchased them either.
Q. Do you know whether any of these fittings were actually used for the purpose of applying grease?
A. No, I do not.
Q. From their appearance, would it indicate——
A. They are rather greasy; otherwise, I don't know.

[fol. 73] The Court:

Well, it is hardly worth while asking him that. He was just employed to make the purchase, and he did it, and that is all there was to it.

Mr. Clarke:

I merely want to establish the fact that the 100, or in fact 101 fittings, are still intact in this bag; that is all.

Testimony of Elwood Hansmann

ELWOOD HANSMANN, a witness for plaintiff, testified as follows:

I am 33; reside at Glencoe, Illinois; and a member of the firm of Williams, Bradbury, McCaleb & Hinkle, patent attorneys, counsel for plaintiff in this case. I am familiar with the record and proceedings in the case of Bassick Manufacturing Company vs. Lyman Manufacturing Company et al. in the United States District Court at Cleveland, Ohio. A copy of the decree in that case appears at page 536 of Volume III of the book of Opinions, Decrees and Injunctional Orders of United States Courts in Patent Infringement Suits Involving Patents Covering Alemite and Alemite-Zerk Lubricating Equipment. The decree was entered May 20, 1927; this decree was entered following the opinion of the Sixth Circuit Court of Appeals. There was a second appeal to the Sixth Circuit Court of Appeals, involving only claim 7 of the Gullborg patent.

Q. If it is, then it is not the decree we want. I want the main decree entered puruant to the mandate of the Sixth Circuit Court of Appeals.

[fol. 74] Mr. Clarke:

If the Court please, I am a little confused at this stage as to what the purpose of this line of testimony is.

Mr. Ahlberg:

I will be glad to tell you, Mr. Clarke. It will only take a minute. Mr. Balluff, testified that he bought some fittings for use in conjunction with a compressor, which I merely want to identify by this witness as being a Lyman compressor that was enjoined in the Lyman case; and I think it is important, for the reason that there is a case where the Rex fittings were sold and the purchaser did not have a Rex compressor, but had a Lyman compressor. There is a case

where the whole patented combination was used, and the patent owner, the Alemite Corporation, sold no part of it.

Mr. Clarke:

Is this all a matter of record in publications and decrees? Quite an ancient case, isn't it—'27?

Mr. Ahlberg:

Yes; but it is not readily apparent to the Court what that construction is, I think. I want to get in evidence a drawing of what that coupler was, and I can do it in just a minute, I think.

A. The decree which was entered pursuant to both decisions of the Circuit Court of Appeals for the Sixth Circuit is this decree—I misread one paragraph. This the proper decree.

Q. Now what was the date of that decree?

[fol. 75] A. The date of this decree was May 20, 1927.

Q. And that appears at page 536 of Volume III, does it?

A. That is right.

Mr. Ahlberg:

I offer merely that decree in evidence as Plaintiff's Exhibit No. 33.

Q. Now, that decree refers to Plaintiff's Exhibit Chart 11, does it not?

A. It does.

Q. Can you produce a copy of that exhibit chart?

A. I have here a copy of that drawing which formed Plaintiff's Exhibit Chart 11 in this Lyman suit, and referred too in this decree.

Mr. Ahlberg:

I offer the drawing in evidence and ask that it be marked Plaintiff's Exhibit No. 34.

Q. Will you look at this device, Mr. Hansmann, which is Plaintiff's Exhibit 23, identified by Mr. Baluff in his testimony (handing same to witness), and state whether the drawing you have just identified, and which has been offered in evidence as Plaintiff's Exhibit 34, illustrates the compressor and coupler outfit of Plaintiff's Exhibit 23?

Mr. Clarke:

I think they ought to prove that. If this witness knows that to be a copy of the original, from his own connection with that case, I think he might say that. The mere offer of a photostatic copy of a drawing with a title to it does not [fol. 76] seem to me to have any probative value, unless so supported. Objection.

Mr. Ahlberg:

If your Honor please, this witness has testified that he is one of counsel for plaintiff, and that he is familiar with this Lyman record, and I asked him to produce a copy of this Plaintiff's Exhibit Chart No. 11, and he produced this drawing. I don't know what more you want, Mr. Clarke. I don't know what your objection is.

Mr. Clarke:

I merely want to have it positively identified as being a copy of the original exhibit, and if this witness knows that to be true, why, he can say so.

Q. Is this a copy of Plaintiff's Exhibit Chart No. 11 in the Lyman case, and referred to in the decree, Mr. Hansmann?

A. That is a copy of the drawing that forms that chart. The chart itself has some reference characters written on it, which do not appear in this drawing; but the drawing itself is identical with the drawing of that chart.

Q. Now, there was a question pending: Will you state whether this drawing Plaintiff's Exhibit 34 illustrates the compressor and coupled outfit of Plaintiff's Exhibit 23?

A. It does.

Q. Do you know whose product that compressor of Plaintiff Exhibit 23 is?

A. This compressor bears the mark, the name "Lyman [fol. 77] Manufacturing Company, Patents Pending." I am familiar with the compressors which the Lyman Manufacturing Company manufactured and sold, and I believe this to be a compressor manufactured and sold by the Lyman Company.

Q. Mr. Hansmann, will you look at this device (handing same to witness), and state, if you can, what it is?

A. This is a fitting marked "Rex," and which I believe to be a fitting made by the defendant herein. The fitting was

cut open, to have a quarter section cut out, so as to show the internal construction of the fitting. This was done at my direction.

Q. Does that device correspond to one of these ⅛-inch straight fittings of Plaintiff's Exhibit 17?

A. It appears to be identically the same.

Mr. Ahlberg:

I offer the cut-open specimen of the Rex fitting as Plaintiff's Exhibit No. 35.

Q. Will you look at this drawing, Mr. Hansmann (handing same to witness), and state, if you can, what it illustrates,

A. This drawing was made under my direction, and illustrates a Rex Compressor outfit, including the compressor, hose and coupler, and also——

Q. Now, just a minute. By "Rex compressor, hose and coupler outfit," do you mean a device like Plaintiff's Exhibit 16 (handing Exhibit 16 to witness)?

A. Yes.

Q. Now, that drawing of the Rex compressor, hose and coupler outfit is shown with what kind of a fitting?

[fol. 78] A. Shown in connection with what appears to be an Alemite ⅛-inch straight fitting.

Q. That is, in that type of fitting there is an outer shell or tubular member, pin extending across it, and the pin is confined between the pin and the flanged end of the shell. Is that right?

A. Yes.— I think you misspoke: The ball and spring are confined between the cross pin and the flanged end of the shell.

Mr. Ahlberg:

I offer the drawing in evidence as Plaintiff's Exhibit No. 36. —That is all.

Cross-examination:

Plaintiff's Exhibit 36 is the drawing of the Rex compressor and is not related to the Lyman case. Plaintiff's Exhibit 34 is the drawing of the chart in the Lyman case. The chart I referred to was a chart showing defendant's compressor, coupler and fitting involved in the suit brought by the Bassick Manufacturing Company against the Lyman Manufacturing Company in Cleveland.

Q. This particular drawing Plaintiff's Exhibit 34 is only a portion of that complete chart. Is that it?

A. The drawing Plaintiff's Exhibit 34 is complete so far as the figures are concerned. The chart itself has on it some reference numerals, which were put on in pencil, and which do not appear on this drawing.

Q. Which particular figure in this drawing, Exhibit 34, shows the Lyman fitting or oil cup?

[fol. 79] A. The figure is not numbered. This figure—Well, all three figures show what appears to be the Lyman fitting or oil cup, taking it as having three figures.

Q. And do you observe any checking correspondence between that particular construction and the one identified in the drawing Exhibit 36? Are they similar in your opinion?

A. The fittings, you mean?

Q. Yes.

A. The fittings are similar; they differ in that in this fitting shown in the Lyman chart the spring is supported on a little shoulder formed in the tubular shell itself, whereas in the chart or drawing Plaintiff's Exhibit 36 the spring of the check valve in the fitting is supported on the cross pin.

Q. Otherwise you consider them the same?

A. Otherwise they appear to be substantially the same.

Q. Now, was an opinion written in this particular Lyman case?

A. Yes.

Q. Do you know whether it is reported?

A. It is my recollection that the—Opinion in the Court of Appeals, do you refer to?

Q. Yes.

A. Reported in 18 Federal 2d, 29, is my recollection. There was a second opinion written on a second appeal, and I do not know where it is reported.

Q. And was that a case alleging contributory infringement or actual infringement?

A. That was a case alleging both.

[fol. 80] Q. And the Court so held?

A. Yes; that is my understanding.

Mr. Clarke:

That is all.

Mr. Ahlberg:

That is all.

Mr. Ahlberg:

On behalf of the plaintiff, I offer as Plaintiff's Exhibit No. 37 a certified copy of Gullborg patent No. 1,307,734.

As Plaintiff's Exhibit No. 38, I offer in evidence a certified copy of a disclaimer of Claim 12 of Gullborg patent 1,307,-734.

As Plaintiff's Exhibit No. 39, I offer in evidence a certified copy of the file wrapper and contents of Gullborg patent No. 1,307,733; and as Plaintiff's Exhibit No. 40, a certified copy of the file wrapper and contents of Gullborg patent No. 1,307,734.

Plaintiff rests.

DEFENDANTS' TESTIMONY

Testimony of Patrick C. Gasparin

PATRICK C. GASPARIN, a witness for defendants, testified as follows:

I am fifty-two; reside at 413 Grant avenue, Milvale, Pa.; and am a machinist for Rex Duplex Fitting Company and have been with them about a year and a half. They make [fol. 81] screw machine products. hand guns for lubricating automobiles and machinery. There is a cooperating member for transmitting lubrication to the part to be lubricated used with the gun and known as the Rex fitting. I have direct connection with the manufacture of that fitting and the gun and its parts.

Q. I show you a specimen article, and ask you if you know what that is (handing same to witness)?

A. That is a Rex fitting and coupling used to lubricate automobiles and any machinery. I supervised the making of it. It is an enlarged specimen and was made particularly for the purpose of illustrating its interior.

Q. Now, calling your attention to the projecting pins on the fitting, do these pins run completely through from one side to the other?

A. No.

Q. How are they made?
A. We call them lugs.
Q. Lugs?
A. A lug put in from each side.
Q. And is that your customary way of making those?
A. The customary way of making them.
Q. Has the Rex Company always made them that way?
A. As long as I have been with them.
Q. That is, for the last year and a half?
A. Yes, sir.
Q. You don't know of them ever having been made by that company other than that?
A. Not to my knowledge.
[fol. 82] Q. Now, I call your attention to the so-called bayonet joint portion of this entire fitting. Is that representative of the way in which the connection has always been made?
A. Yes, sir.
Q. The slots in which the pins engage now have always been made straight across?
A. Always made straight, yes.
Q. You never made them in an incline?
A. No.
Q. Unscrewing the inner portion of this part of this device, I call your attention to the part colored red. What is that?
A. Sealing washer.
Q. What is that made of?
A. Leather.
Q. Is that held in there in any particular manner?
A. Pressed in.
Q. Is it reinforced or held in position by any spring action, do you know?
A. No, sir.

Mr. Clarke:

I offer this specimen as Defendants' Exhibit "A."

I am accustomed to working from drawings and the drawing (handed the witness) is a correct representation of the construction Defendants' Exhibit A.

Q. I observe in this drawing a part marked small d. What is that?
A. That is the body of the fitting.

Q. And that also appears in the physical——

[fol. 83] A. Pardon me a moment. That is not the body; that is a tube which we use to hold the spring up in place.

Q. And is that also present in the physical specimen Exhibit "A"?

A. It is, yes, sir.

Q. This part marked small b is the sealing washer you have spoken of?

A. Sealing washer.

Q. Which is colored red in the physical model?

A. Yes, sir.

Mr. Clarke:

I offer this drawing as Defendants' Exhibit "B."

Q. I show you another print of a drawing, and ask if you know what that is (handing same to witness)?

A. I am familiar with the Alemite coupling and believe that is the Alemite coupling. I have seen its interior and know how it operates. Rex Duplex Fitting Company has never manufactured any coupling like that shown in this drawing.

Q. Has it ever manufactured a fitting in the same way in which this fitting is illustrated in this drawing, for cooperation with the coupling?

A. No, sir; our fitting always has a tube to support the spring and pump.

Mr. Clarke:

This drawing is offered as Defendants' Exhibit "C".

[fol. 84] I received my instructions as to my employment from G. S. Rogers, who, I believe, is an officer in Rex Duplex Fitting Manufacturing Company.

Q. And has Mr. Rogers ever instructed you to build these fittings and couplings in any manner different from that shown in this drawing Exhibit "B"?

A. I was always instructed to keep in exact accordance with the patent that was granted to him. I do not know very much about the practice of the company in disposing of its products, other than I have heard him instruct to sell them in combination at all times.

Mr. Ahlberg:

I move to strike that, if your Honor please, as hearsay. Here is the man that works in the shop exclusively and he says he overheard someone say that this Rex Compressor and-coupler ought to be sold in combination, I presume with Rex fittings; he doesn't say who. It is a self-serving declaration. I move it be stricken; and on the further ground it is hearsay.

The Court:

We will strike it out.

Q. You never gave any instructions of that kind yourself, as to how it should be sold?

A. No, sir.

Q. That is a matter out of your province anyhow, isn't it?

A. Yes.

Mr. Clarke:

Cross-examine.

[fol. 85] Cross-examination.

Mr. Ahlberg:

Q. You said you were familiar with the Alemite coupler outfit, did you not, Mr. Gasparin?

A. Yes, sir.

Q. Is this device of Plaintiff's Exhibit 5 (handing same to witness) an Alemite coupler, as you are familiar with it?

A. From all appearance, yes, sir.

Q. Now, you said this drawing which you identified as Defendants' Exhibit "C" was a correct representation of an Alemite coupler. Will you point out in this drawing where you see anything that looks like an Alemite coupler?

A. It has a cup washer which comes in contact with the fitting, when applied.

Q. All right; what else?

A. And it has that inclined bayonet tip on it, that is, that taper——

Q. Now, Mr. Gasparin, I don't know if you testified in patent cases before, but when you refer to "This here", the record won't show what you are talking about. If there are

reference characters on the drawing, will you use those in describing your drawing?

A. All right. Will you ask that question?

Q. (Question read.)

A. That is part 26, 23 and 27.

Q. Well, now, Mr. Gasparin, in an Alemite coupler such as this device of Plaintiff's Exhibit 5, the coupler consists of an outer shell, does it not?

A. That is true.

[fol. 86] Q. And there are two cup leathers in there, inside?

A. Two cup leathers inside.

Q. Where are the two cup leathers in that drawing you have?

A. It shows one; I presume the other would be on top.

Q. That is not a drawing then of an Alemite coupler, is it?

A. As far as this part is concerned (indicating), it is an exact copy.

Q. Now, the external appearance of the coupler is not the same as shown on that drawing, is it?

A. Only on part 23, 26, 25 and 28.

Q. Mr. Gasparin, that drawing doesn't show two cup leathers?

A. This shows the one cup leather.

Q. It is true, is it not, that that is not a drawing of this Alemite coupler?

A. Not the one you have in your hand, no.

Q. Well, or any other Alemite coupler that you ever saw?

A. When I first looked at this drawing, I took it for granted it just showed a portion of the lower part of the coupling, from here down (indicating).

Q. Well, it is true, is it not, that that is not a true drawing of an Alemite coupler?

A. It is not a true drawing of that coupler there, no (indicating plaintiff's exhibit).

Q. Well, did you ever see an Alemite coupler of which this is a true representation?

A. No, I did not.

[fol. 87] Mr. Ahlberg:

Then, if your Honor please, I move to strike from the record the Defendants' Exhibit "C", as not a drawing of the Alemite coupler outfit. It has no value; it is only confusing

to the Court. The witness says it is not a drawing of the Alemite coupler outfit.

Mr. Clarke:

If your Honor please, this drawing is an enlarged accurate, exact reproduction of the drawings of the patent. We presume that the Alemite construction follows its patent. If counsel is admitting that it does not, I am entirely satisfied to withdraw this drawing from this witness.

The Court:

The drawing Exhibit "C" is withdrawn, then, as I understand it?

Mr. Clarke:

Yes; we will prove it otherwise.

Testimony of R. W. Dusenberry

R. W. Dusenberry, one of defendants, testified as follows:

I reside at Bellevue, Pa., and am acting as assistant sales director of Rex Duplex Fitting Sales Company. The Sales Company sells the greasing equipment product of the Rex Duplex Fitting Company. We always endeavored to follow a definite policy of selling complete equipments. We have at times had them sold separately.

[fol. 88] Mr. Kidd was a distributor for the Rex Duplex Fitting Sales Company.

Q. I show you an advertisement marked Plaintiff's Exhibit No. 29 (handing same to witness), in which he is identified as "sole agent for the Rex Duplex High Pressure Gun." Do you know anything about that?

A. I do not. This is the first time I ever saw it.

Q. Your company had nothing whatever to do with the issue or authorization of this advertisement, had it?

A. It had not.

Q. You never saw it before today?

A. I did not.

Q. As a matter of fact, is or was Mr. Kidd ever sole agent——

A. No.

Q. —for your concern or the manufacturing concern?

A. Not by any authority from us.

Q. You say he was simply a distributing agent?

A. He was.

Q. And what were his rights or privileges as a distributing agent?

A. He had a price set at which he bought the goods, and sold them as he was able to.

Q. Well, were any limitations placed on Mr. Kidd as to such sales, as to whether they should be partial or complete as to the entire equipment?

A. He was instructed to sell them in combination.

[fol. 89] The Court:

Q. What do you mean by "sell them in combination"?

A. A coupler—May I have that exhibit there, that looks like ours, with the red gun? (Plaintiff's Exhibit No. 16 handed to witness.) This we call a complete combination of fitting outfit. They are instructed always to be sure to see that that was sold in combination. Of course, I can't reach out always and make the man sell it that way. The man ofttimes, in need, when the temptation is great, sells them individuually.

Mr. Clarke:

Q. How about the small grease cups, or fittings? How were they sold?

A. To be sold always with our coupler.

Q. Did you ever authorize any sales of the grease cups, or fittings, separately from the coupling and the gun?

A. If the customer had our combination, yes.

Q. You mean, if the customer previously had a compressor?

A. Yes.

Q. And a coupling on it?

A. Yes.

The Court:

Q. Do I understand you to mean by that, that you instructed your salesmen only to sell the fitting separately to persons who had your grease gun?

A. No, not necessarily the grease gun; he must of necessity have the coupler.

Q. The coupling also?
[fol. 90] A. Yes.

Mr. Kidd was connected with the Rex Duplex Fitting Sales Company from sometime in January, '32, I think up until September. Mr. Kidd evidently violated the rule of selling as a combination. I know about a sale of grease cups to the Equitable Auto Company in May of 1932.

A. I recollect Mr. Kidd coming in with the order, asking us if we wouldn't kindly deliver them to them, and make out a bill for them, which was executed, and the order turned over to one of the stenographers there to bill to them.

Q. Well, did the Equitable Auto Company have a compressor, do you know?

A. No, I do not.

Q. Well, that seems to have been a violation of this rule of yours?

A. *It does.*

Q. Was that done deliberately, do you know, or how did it happen that this sale of grease cups to the Equitable Auto Company was made, if they did not have a compressor and coupler of the Rex manufacture?

Mr. Ahlberg:

Just a minute; we are getting so many names in here. Do you mean Rex Manufacturing Company?

Mr. Clarke:

The Rex Company.

The Witness:

The Rex Duplex Fitting Sales Company.

[fol. 91] Mr. Ahlberg:

You refer to Rex Duplex Fitting Company, Mr. Clarke. The defendants in this case are Rogers and Dusenberry. As I understand it, Rex Duplex Fitting Company is not a corporation, it is merely an assumed name used by Mr. Rogers. Is that right?

Mr. Clarke:

"Trading as," I think is the way you brought the bill—"doing business as Rex Duplex Fitting Company," is the way you entitled the defendant yourself.

Q. (Question read)—of the Rex Duplex Fitting Company manufacture. Now, do you have that question? (Question again read, with amendment.)

A. It was a mistake, is all I can answer; it wasn't deliberate.

Q. Have you ever heard of any other instance just like this transaction with the Equitable Auto Company?

A. Not to my knowledge, that I can recall now.

Q. And has your constant effort and practice been to always confine sales to complete equipments, including compressor, coupler and fitting, or of fittings where there has been an original sale to the same purchaser of the compressor and coupler?

A. Try to, always.

Mr. Clarke:

That is all.

[fol. 92] Cross-examination:

I am proprietor of the Rex Duplex Fitting Sales Company, selling organization of the Rex equipment like Plaintiff's Exhibits 16 and 17. We buy compressors, couplers and fittings from Mr. G. S. Rogers, the proprietor of the Rex Duplex Fitting Company, having a factory at Oakmont, Pennsylvania. Dusenberry and Rogers have offices in the same suite in the Fulton Building. I have nothing to do with the Universal Lubricating Company, which company has an adjoining office in the Fulton Building, with a different entrance, and a communicating door.

Q. Now, are you familiar with a sale of 33,000 fittings to the War Department at Dayton, Ohio, about two months ago, of Rex fittings?

A. I remember the order coming in.

Q. You don't get orders like that every day, do you?

A. No.

Mr. Clarke:

I don't think this is cross-examination, your Honor. That is a new order, that the witness was not asked anything about on direct, as I recollect.

Mr. Ahlberg:

Well now, this witness testified on direct examination, if your Honor please, that they always sold these fittings in combination, he said——

The Court:

Well, if they propose to follow this up by asking him whether he knew that the purchaser of that large order was [fol. 93] equipped to use only their complete equipment or not, I think it would be proper to ask him this question.

Mr. Ahlberg:

That is what I want to find out.

Mr. Clarke:

If he is talking about the same fittings, of course, your Honor—the same subject matter.

The Court:

Well, this witness on his examination in chief testified that their instruction to their salesmen was only to sell in combination, and if they sold the fitting separately, only to sell to persons where they needed those fittings for replacements. Now counsel has asked him about a sale of a certain number of fittings to—the War Department, did you say?

Mr. Ahlberg:

Yes, sir.

The Court:

And I think that that is proper cross-examination, provided he intends to follow that up by ascertaining whether this witness knew that the United States Government was equipped to use them in the correct combination or not.

I believe there was a sale of 33,000 fittings to the War Department at Dayton, Ohio. Mr. Rogers attended to that. So far as I know, the fittings were sold by Mr. Rogers. These fittings were the type ⅛ straight fittings, but not [fol. 94] exactly like Plaintiff's Exhibit 17.

Q. The difference was that the spring was a little stronger, or a little weaker, on the inside of the fitting. Wasn't that true?

A. I can't answer that, for I didn't see the fitting itself.

Q. Now, the fittings were described as ⅛-inch straight fittings?

A. Yes, sir.

Q. Now, wherein did those fittings delivered to the War Department differ from the straight ⅛-inch fittings of Plaintiff's Exhibit 17?

A. Plaintiff's Exhibit 17, let me see—This (indicating)?

Q. Yes.

A. Well, I am not enough of a technical man to fully tell you and describe those.

Q. Well, as far as the outside dimensions are concerned, the fittings were the same. Is that true?

A. To my appearance, yes.

Q. And there were pins extending from both sides of the fittings you sold the War Department?

A. Yes.

Q. The dimensions were such that the fittings could be used in conjunction with Alemite couplers of the type of Plaintiff's Exhibit 5. Isn't that true?

A. I believe so. I never saw it demonstrated.

Q. Did the War Department buy any Rex compressor and coupler outfits?

A. That I do not know.

Q. Well, you never sold them any?

A. Not myself.

[fol. 95] Q. The chances are that the War Department will use those fittings in conjunction with Alemite couplers like Plaintiff's Exhibit 5?

A. I can't answer that; I don't know.

Mr. Clarke:

I object to that.

The Court:

Well, the witness says he can't answer that. So it is all ended anyway.

I helped to prepare the price list marked here as Plaintiff's Exhibit 14-a.

Q. Now, this price list reads as follows, does it not? "The following is a schedule of special state distributors' prices which we are pleased to quote you"—The circular is dated April 14, 1932, is it not?

A. April 14, 1932. I presume this one we had. It looks like it.

Q. At the top it says "Rex Duplex High Pressure Hand Gun," and then there is a list: "Gun complete with hose, each $4.30; gun only, less hose, each $2.45; gun only, with coupler, each $1.85; hose only, less coupler, each $1.40; coupler only, 75 cents." Then under the heading "Rex Duplex Fittings" there is a list: "⅛-inch straights $25 M" —I suppose that means $25 a thousand, does it not?

A. Yes.

Q. (Continuing): "⅛-inch 90 Degrees, $50 M; ⅛-inch 45 Degree, $60 M; ⅛-inch extra long, $60 M; ⅛ by ⅕ brass bushing, $40 M." Now, the 90 degrees item here, that refers [fol. 96] to fittings like this 90-degree angle fitting of Plaintiff's Exhibit 17, does it not? (Handing same to witness.)

A. Yes. Is this one of your fittings?

Q. No; that is yours.

A. At least, it looks like it.

Q. Well, it is the fitting of Plaintiff's Exhibit 17?

A. Yes.

Q. You are right, Mr. Dusenberry; they do look like ours. You can hardly tell them apart. Isn't that true?

A. No; I can tell them.

We also make 45-degree elbow fittings; in that type the base is sawed off 45 degrees and the tubular member is screwed into that base. In response to the price lists sent out, we probably received orders; I can't tell offhand; I would have to go back and look it up. I have no doubt we did.

Q. What would you do if you received an order for 1,000 ⅛-inch straight pun fittings from Geller, Ward & Hasner, of St. Louis, for instance?

A. Why, I tried to follow out our instructions relative to the complete outfit.

Q. Well, if you received an order for a thousand ⅛-inch straight fittings, would you write to Geller, Ward & Hasner and tell them that you couldn't fill the order?

A. No; I would tell them that we had the complete outfit—the gun, as we call it, the compressor, the hose and the deductor, and suggest that they take that with it.

[fol. 97] Q. Well, did you have a form letter for situations like that?

A. No.

Q. Well, did you ever write to anyone and say that because of a patent situation you could not fill the order for fittings alone?

A. No, never that; we would speak of our combination, but never referred to anything about a patent.

Q. Well, if you received an order for 1,000 fittings from Geller, Ward & Hasner, without any order for hose and couplers, would you fill the order or not?

A. Just as I said; we would first write to them and explain relative——

Q. Well, did you receive orders for fittings alone?

A. I did; this year.

Q. Did you fill them?

A. Yes.

Q. Without writing them——

A. They had received previous though—bought previously our guns and hose and coupler.

Q. Well, how about Equitable Auto Company?

A. That was a decided fault or mistake.

Q. Well, how about Wade's Service, they bought fittings from your representative and had no Rex outfit?

A. No; Mr. Kidd had it though, and was instructed so.

Q. How did Mr. Kidd get his fittings?

A. He had the outfit, then he sold them the fittings.

[fol. 98] Q. You know he was not using them in combination, do you not?

A. Why, he sold them.

Q. You knew he sold fittings alone, did you not?

A. He did to this Equitable Auto Company.

Q. Well, he did to Wade Service also, did he not?

A. Yes.

Q. And he did also to Mr. Ulrich, did he not?

A. Yes, as he told you.

Q. You heard his testimony here this morning?

A. Yes.

Q. He also sold the City of Pittsburgh fittings alone, did he not?

A. I believe so.

Q. And it probably would get tiresome to enumerate all the cases where fittings alone were sold, without compressor and coupler. Isn't that true?

A. I don't think so, for our sales weren't so abundant. Mr. Kidd didn't sell enough to take care of himself, and complained about it, and asked for permission to take up something else for sale, which was granted to him, because his time was his own.

Q. Now, you say you did receive orders in the mail for fittings alone?

A. Yes, I told you we did.

Q. And you filled them?

A. Filled them, yes.

Q. Without inquiring whether the customer had a Rex compressor and coupler outfit?

A. We knew that they did.

Q. Well, in what cases? Can you name a specific instance?

[fol. 99] A. Why, the C. Larson that was testified here, in Chicago.

Q. All right; let us take up C. Larson. C. Larson was a distributor, was he not?

A. Yes.

Q. And did you instruct him to sell them only in combination, that is, sell the Rex compressors, couplers and pin fittings, in combination?

A. I am tempted to say yes, but I would have to look up to make sure.

Q. That is, you don't know whether Mr. Larson was instructed to sell them only in combination or whether he might, under his authority, at least sell fittings alone, or compressors and couplers alone.

A. Well, he was not so instructed from us; he bought the outfit from us complete.

Q. Well, he bought maybe five hundred fittings, did he not?

A. Possibly that, and he bought the guns and the hose and the coupler.

Q. How many guns and how many couplers?

A. I would have to look it up to tell you the exact amount. He bought quite a number of guns, hose and couplers.

Q. Well, if you gave any instructions to your distributors to sell these compressors, hose and couplers and fittings only in combination, you knew that they could not be very effective or binding, did you not?

A. Not where I couldn't keep my hand on them.

[fol. 100] Q. No. When you sold the fittings to your distributors, they were enabled to do with them what they pleased. Isn't that true?

A. Being a separate business, why, yes; I couldn't——

Q. And you know it was the regular practice of your distributors to sell these fittings for use in conjunction with Alemite coupler outfits. Isn't that true?

A. I can't say I know. I suspect, though, that many did.

Q. And in a few cases at least, you know that happened?

A. Yes.

Q. Now, Mr. Dusenberry, do you think we have a pretty fair collection of the advertising matter of the Rex Duplex Fitting Company and the Rex Duplex Fitting Sales Company here in this Plaintiff's Exhibit 14?

A. I don't know; I wouldn't say you had a fair collection. You have some collected, oh yes.

Q. Well, will you look through these and see if there is any restriction at all——

The Court:

It is now four o'clock; we will adjourn until tomorrow morning at ten o'clock.

(Adjourned until Friday, November 3, 1933, at 10:00 o'clock A. M.)

[fol. 101] Friday, November 3, 1933

Morning Session

R. W. Dusenberry—Resumes

R. W. DUSENBERRY resumes the stand.

Cross-examination continued:

Mr. Ahlberg:

When we adjourned yesterday, I had started to ask a question and it was discontinued, I think about in the middle of it. I ask that that be stricken out, and I will ask a new question.

I have been connected with the Rex lubricating equipment business a little over two years, since about the time the Rex Duplex Fitting Sales Company commenced. The Sales Company buys all the output of the Rex Duplex Fitting Company, Mr. Rogers' company.

Q. Then you participated in this sale of 33,000 fittings to the War Department that we referred to yesterday. Is that right?

A. They haven't been delivered yet.

Q. You have been awarded the contract for the fittings, though, have you not?

Mr. Clarke:

If your Honor please, it seems to me this line of cross examination is entirely improper. The witness is being asked about a very recent purchase, or sale, or contract. It seems to me that not only is not cross examination; it is introducing into the record matters which have come into existence, if they have, since this bill was filed. We are here responding to the allegations of the bill.

[fol. 102] The Court:

I assume that in an equity suit, especially a suit for an injunction, the conduct of the business since the suit was brought may be of importance.

Mr. Clarke:

It may be, and in connection with the accounting proceedings is entirely proper, but to develop the activities of

a defendant, especially in connection with the procurement of a contract——

The Court:

I think, in view of the testimony of this witness, that the sale, for instance, to the Pittsburgh utilities company—whatever the name of it was——

Mr. Ahlberg:

Equitable Auto Company.

The Court:

—to the Equitable Auto Company, was just an incidental sale, without knowledge of whether or not they had the regular Rex equipment, and the testimony of this witness that it was unintentional, it might be proper on cross examination to develop these additional facts—to show about this sale to the War Department, for instance, and what knowledge, if any, the witness had with reference to the uses that the War Department had to make of the devices they were purchasing. I think we will permit the cross examination.

Mr. Clarke:

[fol. 103] May I have an exception?

The Court:

We note you an exception.

Mr. Clarke:

If I may add, your honor: We are interested in the same kind of devices, I presume as are complained of in the bill, and as developed in the proofs tending to support infringement heretofore offered; and it seems to me, if this matter is to be gone into, it should first be established that the construction inquired about is a similar construction. Otherwise, it seems to me, it is a fishing expedition, to get information for the purpose and benefit of this plaintiff.

The Court:

Well, I assume, when one of the parties to a suit takes the witness stand in his own behalf, and states that he has

not undertaken to make any sales of separate parts that would fit into the plaintiff's combination, patented combination, but undertakes to sell only his own patent combination, that they have a right to quite searchingly inquire into his operation. We will permit them to do so.

Q. (Question read, as follows: You have been awarded the contract for the fittings, though, have you not?)

A. Yes.

Q. Now, was that award made to Rex Duplex Fitting [fol. 104] Sales Company or Rex Duplex Fitting Company?

A. I am not sure of that. I would have to look that up again. I think Rex Duplex Fitting Sales Company.

Q. Well, under the arrangement that you have adopted—

A. I will tell you, Mr. Rogers handled that.

Q. You said a few moments ago that your company, the Rex Duplex Fitting Sales Company, handled all of the sales and all of the output of the Rex Duplex Fitting Company?

A. Yes; but he was simply the contact man.

Q. Well, was he the contact man for Rex Duplex Fitting Sales Company, or was he acting in his own behalf?

A. He was acting for us.

Q. He was acting for you. Well then, you, as proprietor of the Rex Duplex Fitting Sales Company, expect to participate in the profits from that transaction with the War Department, if there are any profits, do you not?

A. Yes.

I participated in the preparation of the circular Plaintiff's Exhibit No. 41. They were printed a year or more ago. This circular shows an improved coupler and in general shows and describes the equipment of Plaintiff's Exhibit 16.

Q. Now, this circular reads in part, does it not: "Rex Duplex High Pressure Gun is adaptable to all lubricating systems and connectors," does it not?

[fol. 105] A. Repeat that question, please.

The Court:

The paper speaks for itself, and whatever is on it is on it. Isn't that all there is to it? You don't need to ask this witness to read it; the Court can read it as well as he can.

Q. Now, what do you mean, Mr. Dusenberry, by this language: "Rex Duplex High Pressure Gun is adaptable to all lubricating systems and connectors"?

A. Show me that on there, please.

Q. Right here (indicating).

A. "Is adaptable to all lubricating systems and connectors equipped with Rex Duplex 10,000 lb. pressure hose."

Q. Now, Mr. Dusenberry, there is a semicolon, is there not, after "connectors"?

A. Yes.

Q. Well, wouldn't you expect a person reading this circular to pause after the clause "Rex Duplex High Pressure Gun is adaptable to all lubricating systems and connectors," semi-colon?

A. If he did, it wasn't our intention that it should so be read.

Q. Well, that is ordinarily the purpose of a semi-colon, isn't it—to divide up a sentence?

A. It may be, but our purpose—we were in business selling the complete equipment, and we wanted to sell these outfits (indicating) just as well as we did the others.

Q. Well, taking the sentence as you read it: "Rex Duplex High Pressure Gun is adaptable to all lubricating sys-
[fol. 106] tems and connectors, equipped with Rex Duplex 10,000 lb. pressure hose, with coupler complete, automatic self-feeding." Now, what did you mean by that language?

A. I don't know that I can better explain than what it says right there itself.

Mr. Clarke:

If your Honor please, the language speaks for itself. It isn't competent for this witness to explain printed language.

Mr. Ahlberg:

If your Honor please, the reason I am pursuing this line of examination is this: In these cases involving contributory infringement the alleged infringer's understanding and intention is important to be proven and understood by the Court, and I think that the only way we can develop the defendant's understanding and expectation is to find out what his views about the matters were.

The Court:

We will let the witness answer the question.

Q. (Question read.)

A. Just exactly what it says.

Q. Well, does it mean that the Rex Duplex high pressure gun, with coupler, was adapted for use with all lubricating systems, including the Alemite system?

A. That wasn't our thought—or not my thought; it is our own.

[fol. 107] Q. Now, when you say "adaptable to all lubricating systems," what do you mean by "all lubricating systems"?

A. Wherever greasing equipment like this can be used, of ours, on any car.

Q. On any car, including those equipped with Alemite fittings?

A. While that may fit the Alemite fitting, that wasn't our intention.

Q. Well, it does fit the Alemite fitting, does it not?

A. From what has been shown right here, yes.

Q. You have frequently inserted Alemite pin fittings in your coupler of Plaintiff's Exhibit 16, to see if it would cooperate with the coupler, have you not?

A. Well, I think possibly once, when one was brought in.

Q. Did you participate in the design of this equipment.

A. No.

Q. That was designed prior to your connection with the Rex Duplex Fitting Sales Company?

A. Yes, except for some improvement.

Q. Well now, this language "is adaptable to all lubricating systems,"—that would include the Alemite system, would it not?

A. Well, it wasn't our intention that that was included.

Q. Now, we have here one system called the Rex system. Is that right?

A. Yes.

Q. Do you know of any other lubricating system?

[fol. 108] A. I know of yours, that you represent.

Q. You know of the Alemite equipment?

A. Yes.

Q. Do you know of any others?

A. I think there is one or two, but I am not sure. In New York, I think—is there not Adams?

Q. Adams doesn't make fittings, does it?

A. I am not sure.

Q. Well, then, to the best of your knowledge and belief, this language "is adaptable to all lubricating systems" is not including only Rex and Alemite. Is that correct?

A. I wouldn't say so, no.

Q. Well, I am giving you the fullest opportunity to say whether you knew of any other system. Can you tell us of any other system that would comprise fittings that would be received into the Rex coupler, of the Plaintiff's Exhibit 16?

A. There are one or two other manufacturers of greasing equipment, but just how much of the fittings they make, I do not know.

Q. Well, there isn't anyone that makes fittings adapted to be received into a Rex coupler like Plaintiff's Exhibit 16, is there?

A. That I don't know.

Q. But you do know that Alemite fittings are extensively used and installed on automobiles, do you not?

A. Yes.

Q. And as far as you know, the Alemite pin fittings are standard equipment on automobiles, to the exclusion of any other type of equipment that would be usable with the Rex [fol. 109] couplers of Plaintiff's Exhibit 16?

A. I suppose so, but I couldn't say definitely yes.

Q. Now, Mr. Dusenberry, in Plaintiff's Exhibit 35 we have a cut-open sample of the Rex fitting, have we not (handing same to witness)?

A. It looks like it; I guess it is.

Q. Well, you have been making and selling these things for two years. Is there any question about it?

A. Outside of this, I have seen imitations made so well that I would say it was— The one here was stamped on it, and I believe—it looks so much like it, I would be willing to say it is, but to say definitely, I cannot, for I don't know the source of it.

Q. Well, as far as you can see, it is identical in construction with the Rex fitting, is it?

A. Yes; what is known as the Rex fitting.

Q. And unless someone has deliberately made a counterfeit, this is a Rex fitting. Isn't that true?

A. As far as I can say.

Q. Now, Mr. Dusenberry, what do you call these porjections that extend from each side of the shell of the fitting? Do you call those pins, or lugs, or what do you call them?

A. Lugs.

Q. You call them lugs. Don't you ever call them "pins"?

A. Well, they have had; they are called pins, and I know what they mean.

Q. But you call them lugs?

A. Yes.

[fol. 110] Q. Now, I notice in this circular, Plaintiff's Exhibit 41, the second paragraph commences "No shearing of pins." What did you mean by that?

A. Taking these off here (indicating on Plaintiff's Exhibit 35).

Q. You didn't mean by that that the compressor and coupler outfit wouldn't shear off the pins of an Alemite pin fitting, did you?

A. No; this is all for our own.

Q. Now, in the last part of this paragraph of the circular Plaintiff's Exhibit 41, we find "Sold complete or in separate units, as required." That means, I presume, that you would sell the customer either the gun, hose and coupler, Plaintiff's Exhibit 16, or you would sell it in conjunction with the Rex fittings of Plaintiff's Exhibit 17. Is that right?

A. Let me see 17, and see what you mean.

Q. 17 is the collection of your f[illegible] (handing Plaintiff's Exhibit 17 to witness.)

A. It means that after the customer had this complete outfit he could buy just what he wanted.

Q. That is, after he had purchased what?

A. Our complete outfit—compressor, hose and coupler.

Q. And otherwise, you wouldn't sell him any fittings. Is that true?

A. Not knowingly or intentionally to be used on others.

Q. You couldn't exercise any control over the use of the Rex compressor and coupler outfit after they had left your hands?

A. No more than Alemite Company can with theirs.

[fol. 111] Q. Those instructions to a salesman or a——

A. A distributor.

Q. —or a distributor would be about as effective as the application of a label to intoxicating liquor "For Medicinal Purposes Only." Isn't that true?

A. I couldn't answer that; I don't know. You know as much about that as I do.

Q. Probably do. Well, you know that it would not be effective, do you not?

A. I know it has not been effective at times.

Plaintiff's Exhibit No. 42 is a circular we sent out, and bears the name "Rex Duplex Fitting Sales Co." and was

prepared and circulated to the trade and handed to distributors.

Q. This circular has on it an illustration, illustrating generally at least the Rex compressor and coupler outfit of Plaintiff's Exhibit 16, does it not?

A. To a fair degree. You can see that that is missing there (indicating). Let me see here (witness examines Exhibit 16). That is an improved one (indicating circular referred to).

Q. Does that illustration conform more strictly to the equipment that I now show you (handing same to witness)?

A. I wouldn't think so; I don't know—No—to a degree it does, but not—(witness does not finish).

Q. Have you seen this type of equipment before?

A. Why, I don't remember ever seeing it.

Q. You don't remember ever seeing a compressor and coupler outfit like this outside of the court room?

A. I may have seen them passing, on boards of greasing and service stations, but I never examined them.

[fol. 112] Q. Did you ever see any like this in your office?

A. I don't remember of ever seeing them.

Mr. Ahlberg:

I offer this circular in evidence, and ask that it be marked Plaintiff's Exhibit No. 42.

Q. Now, in the last paragraph of this circular (Exhibit 42), Mr. Dusenberry, there is a sentence reading, "A Rex 10,000 lb. high pressure grease hose with a Rex Duplex coupler complete is supplied with each unit, which is adaptable to all lubricating systems and connections." What did you mean by that language?

A. Just what I said before, for our own. I had no idea whatsoever of Alemite in any of this.

Q. Well, the language of the last paragraph of this circular letter, Plaintiff's Exhibit 42, is substantially identical to the language appearing on the circular, Plaintiff's Exhibit 41. Isn't that correct?

A. Let me see, please.

Q. (Exhibits 41 and 42 handed to witness.)

A. The last paragraph?

Q. Yes.

A. The last paragraph of the circular Plaintiff's Exhibit 42 is substantially identical to the last paragraph of the circular Plaintiff's Exhibit 41.

The Court:

I don't see why you need ask this witness to make the comparison. The two papers speak for themselves.

The Witness:

Your Honor, I think so, too.

Q. Well, your testimony with reference to the last para-
[fol. 113] graph of Plaintiff's Exhibit circular 42 would be the same as with reference to the descriptive matter appearing on Plaintiff's Exhibit 41. Is that correct?

A. They are intended for the same kind of equipment, our equipment.

Q. Mr. Dusenberry, did you prepare or participate in the preparation of these pieces of Rex advertising matter comprising Plaintiff's Exhibit 14, "a" to "i," inclusive, and Plaintiff's Exhibit 18 (handing Plaintiff's Exhibits 14-a to 14-i, inclusive, and Plaintiff's Exhibit 18 to witness)?

A. (Witness examines exhibits referred to, individually.) More or less all of these (indicating); I had nothing to do with that (indicating one exhibit).

Q. You did not prepare or participate in the preparation of the letter forming Plaintiff's Exhibit 14-i. Is that correct?

A. That is right.

Q. That is a letter signed "Rex Duplex Fitting Sales Company, C. H. Emery," is it not?

A. Yes.

Q. That is a letter that he wrote himself, apparently?

A. Apparently, yes, sir.

Q. Now, Mr. Dusenberry, certain of the circulars of Plaintiff's Exhibit 14 and Plaintiff's Exhibit 18 are merely price lists, are they not; and the other papers of that exhibit are letters or circulars?

A. Now, these (indicating)—you want to know—are price lists? Is that it?

Q. Yes. Will you enumerate the price lists?

[fol. 114] The Court:

Well, don't these things show on the face of them? Why do you need to take the time doing that?

Mr. Ahlberg:

All right. I will ask another question.

The Witness:

May I read the very first here?

Mr. Ahlberg:

Yes.

The Witness:

"The attached literature describes the line of Rex Duplex high pressure grease hand guns, also copies of letters to the trade, for your reading and files,"—Is that it?

Q. Well, it is true, is it not, that Plaintiff's Exhibits 14-c, 14-g, 14-f and Plaintiff's Exhibit 18-are Rex price lists, are they not?

A. Yes; but don't forget it mentions there just what I read.

Q. Well, as the Court says, these papers speak for themselves——

A. Yes.

Q. —and the reading matter is there, and the Court will see it. Now, the prices given on these price lists vary somewhat, do they not? The point of the question is this, Mr. Dusenberry: You had different prices to different classes of trade. Is that true?

A. Yes.

Q. That is, you had prices that were available to garages and service stations, I presume?

[fol. 115] A. It is all given in there (indicating exhibits referred to).

Q. Well, Plaintiff's Exhibit 14-a states that prices are for special state distributors. Is that correct?

A. That is what it says right there, yes—"The following is a schedule of the special state distributors' price which we are pleased to quote you."

Q. And the price list of Plaintiff's Exhibit 14-f is for what class of trade?

A. This is a copy of a circular letter on this side (indicating), "which we are mailing to state distributors, jobbers, dealers and salesmen."

Q. Then the prices were for that class of purchasers. Is that correct?

A. Yes.

Q. Now, for what class of purchasers were the prices given in Plaintiff's Exhibit 18?

A. For the distributor or salesman.

Q. And not for garage or service stations to whom you sold. Is this correct?

A. This (indicating)?

Q. Plaintiff's Exhibit 18, yes.

A. Yes.

Q. That is, the prices given on Plaintiff's Exhibit 18, price list were for salesmen and distributors, and not for garages and service stations. Is that correct?

A. I am not sure on that. This may be on our suggested price list for his selling. I will have to go back and look it up, to make sure.

Q. Will you do that, and make sure?

A. May I have a copy of one of those?

[fol. 116] Q. Yes. Mr. Dusenberry, in the circular letter Plaintiff's Exhibit 14-b there is a paragraph, about the middle of the page, with the heading, "The Rex Duplex Fitting is a Legitimate Product. The question of the possible patent infringement has received our very careful attention. The Rex Duplex fitting was designed with full knowledge of the patent litigation on pressure grease fittings, and with the express purpose of avoiding infringement on all patents. We are advised by legal counsel that we do not infringe, therefore we undertake to indemnify all dealers handling the Rex Duplex fitting against any liability whatsoever for patent infringement. You can purchase these fittings entirely without concern as to the possibility of any litigation, for we are prepared financially and legally to defend any suit if instituted by anyone to attempt to restrain the use of the Rex Duplex fittings." Now, did you mean by that language, to indemnify all dealers handling the Rex compressor and the Rex fitting, when used with an Alemite compressor and coupler outfit, such as exemplified here in Plaintiff's Exhibits 5 and 6?

A. My understand of that is that it is relative to this (indicating one of fittings of Plaintiff's Exhibit 17) being taken up, with the question of them having—any infringement on this (indicating same fitting).

Q. Mr. Dusenberry, when you say "this," and hold something up, it doesn't show on the record what you are talking about. You have picked up one of the fittings of Plaintiff's Exhibit 17, have you not, a Rex fitting?

[fol. 117] A. Yes.

Q. Now, will you tell us again what you were to do, when you agreed to "indemnify all dealers handling the Rex Duplex fitting against all liability whatsoever for patent infringement"?

A. The question on this—We contended this did not infringe any other fitting (indicating one of fittings of Exhibit 17).

Q. You meant, indemnify dealers or users who might be sued for the use of Rex Duplex fittings like Plaintiff's Exhibit 17, when used in conjunction with plaintiff's Alemite compressor and coupler outfits like Plaintiff's Exhibits 5 and 6?

A. No such thought about the use of the Alemite. If this (indicating Rex fitting, Exhibit 17) relative to infringing on another fitting. That question had been asked of us, and that is the reason why.

Q. Well, as a matter of fact, Mr. Dusenberry, you don't know exactly what that sentence meant. Is that not true?

A. Why, it states right there—to the best of my ability, right there (indicating exhibit).

Q. As you stated here, you undertook to "indemnify all dealers handling Rex Duplex fitting against any liability whatsoever against patent infringement"?

A. Just as I said there a while ago.

Q. That is, you agreed to indemnify dealers handling the Rex Duplex fittings, regardless of the use to which those fittings were put?

A. No, no.

Q. That is what this letter says, does it not?

[fol. 118] A. My understanding was—it says: "The question of the possibility of patent infringement has received our very careful attention. The Rex Duplex fitting was designed with full knowledge of the patent litigation on the pressure grease fitting, and with the express purpose to avoid infringement on all patents. We are advised by legal counsel that we do not infringe, therefore we undertake to indemnify all dealers handling the Rex Duplex fit-

ting against any liability whatsoever on patent infringement. You can therefore purchase these fittings entirely without concern as to the possibility of any litigation, for we are prepared financially and legally to defend any suit instituted by anyone attempting to restrain the use of the Rex Duplex fitting." It doesn't say if used with Alemite.

Q. Well, whatever it means, you stand by the agreement contained in this letter?

A. To the best of my ability.

Q. Did you prepare this letter of Plaintiff's Exhibit 14-b, or did a lawyer prepare it for you?

A. That was prepared by others?

Q. By whom?

A. By others.

Q. What do you mean, "by others"?

A. I understood it was prepared under the direction of our counsel.

Q. Mr. Clarke?

A. I don't know, at that time who was there, no.

Q. Mr. Dusenberry, this is a letter that was signed by you?

A. Yes.

[fol. 119] Q. You should be able to tell us——

A. I will have to refer you to Mr. Van Kirk.

Q. Mr. Van Kirk is one of your counsel here?

A. Yes.

Q. The letter was prepared under his direction, was it?

A. As far as I know.

Q. Well, Mr. Dusenberry, this letter bears your initials?

A. Yes.

Q. And bears your signature?

A. Yes—Let me see. (Letter handed to witness). Typewritten; not my signature to it.

Q. But you don't disclaim the letter, do you?

A. No, I don't disclaim it.

Q. As I understand your testimony, the letter was written by your counsel, Mr. Van Kirk, and turned over to you. Is that correct?

A. That part of it here (indicating).

Q. That is, the paragraph——

A. Just read there.

Q. —having the heading "The Rex Duplex Fitting is a Legitimate Product" was prepared by Mr. Van Kirk. Is that correct?

A. I am not sure on that; but I will have to refer you to him. I took it as such from our counsel.

Q. Do you know where you saw that paragraph first? Where did you get it? You said you prepared the letter, or participated in its preparation.

A. Why, we had it there at the office after going over it, and this was——

[fol. 120] Q. You don't know whether it blew in the window or whether someone handed it to you, do you?

A. Well, I know that it was given to us there in the office.

Q. By Mr. Rogers?

A. There were several of us together; I can't say just which one.

Q. Well, Mr. Rogers was active in the preparation of these letters, Plaintiff's Exhibit 14. Isn't that correct?

A. Well, his name is on it, yes; practically, I think it is the same as this letter here (indicating).

Q. Here is a letter, for example, Plaintiff's Exhibit 14-e; that bears your initials as being the dictator of the letter, and it also bears Mr. Rogers' typewritten signature. Isn't that correct?

A. Yes. This (indicating), of course, I took from an original copy.

Q. Now you have pointed to Plaintiff's Exhibit 14-d, and stated that you took the substance of the letter from the letter of Plaintiff's Exhibit 14-b. Is that correct? (Handing said two letters to witness.)

A. (Witness compares letters handed to him.) Which preceded the other, I can't tell now.

Q. Well, is it your present idea that Mr. Rogers cooperated with you in the preparation of this letter of 14-d?

A. Yes; or whether I cooperated with him——

Q. Is Mr. Rogers here now?

A. I don't see him.

Q. He has been here, sitting in the last row of the court [fol. 121] room, has he not, part of the time during the trial?

A. I saw him once or twice yesterday.

Q. Now, in this letter of Plaintiff's Exhibit 14-d you refer to the question of infringement of patents, do you not?

A. "Relative to the legality of the patents pending on Rex Duplex products".

Q. This letter was mailed to state distributors, jobbers, dealers, and salesmen, I presume, in accordance with the heading on the letter?

A. Yes.

Q. In this letter, you say, "Gentlemen: Relative to the legality of patents pending on the Rex Duplex products you are advised that our attorneys have carefully investigated all questions of the possible infringement, and assure us that we are not infringing. We therefore guarantee to protect you against any liability whatever for patent infringement." Did you have in mind there defending a dealer who sold Rex Duplex fittings for use with Alemite compressor and coupler outfits like Plaintiff's Exhibits 5 and 6?

A. I will have to repeat the question as I answered before (indicating Plaintiff's Exhibit 17 fitting)—that my understanding was relative to infringing—this patent infringing against any other fitting.

Q. Now, you are pointing to a device and not to a patent, are you not, Mr. Dusenberry?

A. Well, this is what we were speaking about (indicating fitting of Plaintiff's Exhibit No. 17).

Q. Well, see if we cannot make it clear for the record, will you, please? Did you not mean by this language that [fol. 122] you would protect a dealer who sold Rex Duplex fittings for use with an Alemite compressor and coupler outfit of Plaintiff's Exhibits 5 and 6?

A. I will have to repeat again: The question of the infringement of this fitting (of Plaintiff's Exhibit 17) against any other fitting, of our fitting against any other fitting; not the use of it in connection with another equipment. That is my understanding.

The Court:

This witness has reiterated his answer several times.

The Witness:

Yes, your Honor.

The Court:

I think you are proceeding too far on this matter. We do not want to spend all day going over just this proposition

again and again. You have the witness's answer several times, and now fairly and squarely.

Q. Mr. Dusenberry, are you familiar with drawings at all?

A. Very little; as I told you yesterday, I am not a technical man.

Q. Do you know enough about drawings to say whether this is a correct representation of the defendants' Rex fitting and connector (handing drawings to witness)?

A. I am not; but to the extent that I understand, there are things there that look like it to me, but I couldn't say positive.

[fol. 123] Q. That is, although you have been selling this equipment for two years, you don't know enough about it to say whether this drawing is a correct representation of the fitting that you have been selling (indicating drawing Defendants' Exhibit "B"). Is that correct?

A. I wouldn't say I didn't know anything about this (indicating fitting); but I don't know enough about that drawing to positively say that it is.

Q. And still you undertook to advise dealers, salesmen and others on questions of patent infringement. Is that true?

A. Through our counsel.

Mr. Ahlberg:

That is all.

Redirect examination.

Mr. Clarke:

Q. Mr. Dusenberry, you have been asked about various systems of lubricating. Do you know what system the Ford Motor Company uses?

A. I think they have one of their own, similar to what is called Zerk. That is my impression.

Q. In any event, it is not the Alemite system, is it?

A. Not to my knowledge—I don't think so; it is my understanding it is not.

Mr. Clarke:

That is all.

[fol. 124] Recross-examination.

Mr. Ahlberg:

Q. Now, Mr. Dusenberry, by "the Zerk system" you mean fittings like this group that I now show you (handing same to witness). Isn't that correct?

A. Well, what I saw of the Ford, if my memory serves me right, is something similar to this (indicating one of the fittings), with a hole straight through. This (indicating) seems to have a ball, I believe——

Q. Let me call your particular attention to two of this group of about fifty or seventy-five fittings (handing two fittings to witness).

A. So far as I can recognize, this (indicating) is my understanding, that is near like what Ford uses.

Q. Well, you are right. This is the type of Zerk fitting that Ford employs as standard equipment on Ford cars. Now, these fittings are used in conjunction with a Zerk push type compressor of the kind I have here in my hand (indicating). Isn't that true?

A. I don't know; I never used it.

Q. Do you know how the Zerk fittings are used?

A. If I remember rightly—I never used any—they have an adapter that sits right over—Is that not an adapter (indicating)?—a plain metal adapter that sits right over. Is that the way?

Q. The way this works is that these fittings are installed on the automobile, and the user who wishes to lubricate his car applies the compressor to the end of the fitting, and pushes, thereby forcing grease into the fitting and into the bearing. That is your understanding, isn't it?

[fol. 125] A. So far as I know; I never had any experience, but that is, as far as I know.

Q. You are strictly an office man, are you, Mr. Dusenberry?

A. Pretty much.

Q. You don't call on garages and service stations yourself?

A. No, no; I am the poorest kind of a demonstrator.

Q. The Rex Duplex Compressor and coupler outfit, Plaintiff's Exhibit 16, is not adapted and intended for use with these Zerk fittings, is it?

A. It is not adapted or intended for any other fitting but our own.

Mr. Ahlberg:

I offer in evidence, as Plaintiff's Exhibit No. 43, the Zerk fitting referred to by the witness.

The Witness:

Mr. Ahlberg, that fitting in that Exhibit 43—now, with that operation, I can see that much: would you ever be able to grease any machine with that fitting in this coupler (indicating)?

Mr. Ahlberg:

Well, Mr. Dusenberry, I could answer, but I guess you had better let your lawyer answer your questions.

The Witness:

The reason why I asked that: Is that thing——

The Court:

(To witness.) Mr. Dusenberry, don't carry on the argu-[fol. 126] ment with counsel. He is asking you questions, and not you of him.

The Witness:

Well, just what little common sense I have would show me that; that is all.

Mr. Ahlberg:

That is all.

Redirect examination.

Mr. Clarke:

Q. About this Zerk fitting, it has a spring-pressed valve and ball in it, hasn't it?

A. Why, I have seen some with, and some without.

Q. As a matter of fact, the Ford Company uses it without, doesn't it?

A. All that I have seen, yes.

Q. And the grease is inserted through that valve opening under pressure of the gun?

A. Yes.

Q. Which is applied directly against the end of the fitting, isn't it?

A. Yes; it most needs that pressure, otherwise there would be no grease go in it.

Q. And taking the gun away, the valve recedes and closes the opening against escape?

A. Those that have a ball in them with a spring, yes; if they are a straight hole, how is it going to close?

Q. Well, it is a fact, as I have just stated, is it: on taking the terminal of the gun or pump away from the fitting, this valve closes the opening and prevents outward escape of the inserted lubricant?

[fol. 127] A. Yes; if they have the valve-ball opening, yes.

Q. Now, do you know whether or not the Ford Company makes its own lubricating equipment of that kind?

A. I do not. I believe they do. I think I heard to that effect, but I am not positive.

Q. You are not sure yourself?

A. No, I am not.

Q. In any event, it does not use any Alemite coupler in connection with that Zerk fitting, does it?

A. That I don't know.

Q. It couldn't use it, could it?

A. It depends on what you mean by "Alemite coupler." You mean this right here (indicating one of exhibits)? I can't see how they could use that coupler there on any Zerk fitting, any more than they could use this here (indicating) on any Zerk fitting.

Q. Well, in any event, the terminal of the gun used to put grease through a Zerk fitting is not the same as the terminal on the end of the Alemite gun. That is right, isn't it?

A. Yes, that fitting there (indicating).

Q. That doesn't mean anything, to point to something.

Mr. Ahlberg:

Mr. Clarke, I have no objection to your offering in evidence the Zerk gun, so the Court will know, when he comes to examine the record, what you are talking about here.

The Witness:

The reason I answered that, I believe this (indicating) is one of the Alemite products, is it not?

[fol. 128] Mr. Ahlberg:

That is right.

The Witness:

Therefore, if I said "yes", to use this (indicating), I cannot, for I never tried it; but I believe that is what that is for, and I believe it will function with Ford as well as their own.

Q. In giving your last answer, you have held in your hand the specimen of the gun shown you by plaintiff's counsel, have you not?

A. Yes.

Q. Now, just what is that, if you know?

A. From his own acknowledgment of it, it is an Alemite compressor, or gun—as we call it—grease gun.

Mr. Clarke:

It is perfectly all right, if you want to offer that, Mr. Ahlberg; I don't care to. That is all.

Recross-examination.

Mr. Ahlberg:

Q. Mr. Dusenberry, you seem to know a little more about this Zerk system when Mr. Clarke asks you these questions. You referred to this device of Plaintiff's Exhibit 43 as being one without a ball, did you not?

A. Let me see it again, please? (Exhibit 43 handed to witness). Yes, as far as I can see, that has a clear hole through it.

Q. Now, this one that I hand you has a ball and a spring inside, has it not?

[fol. 129] A. Yes.

Q. And that is the kind that you referred to in response to Mr. Clarke's questions about Zerk fittings having a ball valve on the inside?

A. The question he asked relative to the closing of it after,—it would have to be that kind, because the pressure can't be held in that.

Q. Well, that is the question: This is the type of fitting you referred to as having a ball and spring on the inside of the Zerk fitting. Is that right?

A. Any Zerk fitting that has that in it—necessarily whether it is that or not, I don't know.

Q. Well, let me ask you again, Mr. Dusenberry: Is this the type of fitting you referred to as having a ball and spring on the inside, when you answered one of Mr. Clarke's questions?

A. It is a type; but by saying that I don't mean absolutely Alemite type of Zerk fitting.

Q. Well, do you know of anyone else that makes Zerk fittings?

A. I don't know—indeed, I don't, for I am not acquainted well enough with the Zerk product.

Q. Now, let me ask you again: Is this the type of fitting you had reference to in answering Mr. Clarke's questions about——

A. Valve closing?

Q. Yes.

A. That is the type. I say that, not because——

Q. Now, never mind the explanation, Mr. Dusenberry. This is the type, is it not?

A. That conforms to the type that I had reference to [fol. 130] when I answered his questions.

Q. Thank you.

Mr. Ahlberg:

I offer this fitting in evidence as Plaintiff's Exhibit No. 44.

Testimony of J. Roy Van Kirk

J. Roy Van Kirk, a witness for defendant, testified he is a member of the Pittsburgh bar. That he has been attorney for Rex Duplex Fitting Sales Company and Rex Duplex Fitting Company for a couple of years or so.

Describing a certain meeting as to which he had cross examined the plaintiff's witness Kidd as to business methods, he said:

Last year, 1932—the company decided that they would try to put on a sort of a sales campaign, and they rounded up a number of salesmen—I think, as Mr. Kidd said, there were about twenty-five there that night, if my recollection is correct—among whom was Mr. Kidd. We discussed the equipment, and I had discussed the matter before with the

law firm of Byrnes, Stebbins, Parmelee & Blenko, and I had stated specifically that night that, while in the opinion of counsel it would not infringe to sell the compressor with the coupler, in view of the appeal to the United States Supreme Court allowed by the Supreme Court in the Adams Grease Gun case, which was subsequently withdrawn, that they couldn't sell the fittings direct, but would have to sell, if [fol. 131] they sold fittings, in combination—that is, by "combination" I mean the compressor—the coupler, with the fitting; in other words, sell the two together. Those were the instructions that I issued that night, to Mr. Kidd among others, and he was present and heard it.

Mr. Ahlberg:

I move to strike that,—that is, that Mr. Kidd heard it. I am sure this witness doesn't know whether Mr. Kidd heard the instruction or not.

The Court:

Well, of course, if Mr. Kidd gave any indication that he heard it, or said anything at that time that indicated that he heard it, the witness could answer; but otherwise, he could only testify to what he said,—unless the witness is now able to state that Mr. Kidd made some remark indicating that he heard what was said.

The Witness:

I will state, in your answer to your Honor's question, that on two different other occasions I discussed the matter with Mr. Kidd, relative to the twenty-five salesmen that Mr. Kidd talked about, that never went out. Mr. Kidd himself was practically the only salesman around the City of Pittsburgh, and he bought—I know of my own knowledge he bought this equipment and took it out to his home, and sold it principally from his home. I know that of my own knowledge. This meeting occurred in February, 1932 in the office of [fol. 132] the Rex Duplex Fitting Sales Company, a good sized office and there was no reason why everybody in the room could not hear what he said. Numerous questions were asked by various persons and Kidd was sitting right up in the front row. As to the Adams Grease Gun Case witness says he knows the appeal allowed by the Supreme Court was

withdrawn on behalf of the Adams Grease Gun Company who paid the costs. Witness said further, I know that they litigated Alemite for about five or six years. That is all I can tell you, although I have a letter from counsel for the Adams Grease Gun Company giving as a reason that Adams is now licensed by Alemite. After this suit was brought Kidd came into Van Kirk's office with Dusenberry and asked him to enter appearance on his behalf and have present patent counsel do so also, which was done. Witness says further:

Mr. Kidd came into my office on two different occasions after that and discussed this question with me. I made notes, and my recollection is I submitted them to you, Mr. Clarke, for the purpose of drawing an affidavit in this case, —I am not positive about that; but the next thing I heard, while the relation of counsel existed between Mr. Kidd and ourselves, the Alemite Corporation had been out to Mr. Kidd's house, through a representative, and procured a statement and an affidavit from Mr. Kidd as to his—well, the affidavit that is here in court.

I think the day before the preliminary injunction hearing I came into court and filed a petition withdrawing our appearance for Kidd, and he never explained to me why he [fol. 133] changed his relationship.

On cross examination Van Kirk says he does not practice patent law, verified the meeting of salemen in February, 1932, but that he did not say they were engaged in the selling of Rex Duplex Fitting equipment like Plaintiff's Exhibits 16 and 17. About twenty-five were there who contemplated taking up the sale of the equipment. Only Kidd and Dusenberry were salesmen, the rest prospective. If Exhibits 16 and 17 are Rex Duplex Equipment I gave these men some instructions about their sale.

I told them that in the opinion of counsel that had been rendered me we could sell the compressor with the coupler individually, but the fittings, if they sold fittings, they should sell the fittings and the coupler in combination; that is, they should sell them together; in other words-, but in the complete unit, so that it could be used.

Q. Now, your instructions to these men were that this Rex equipment of Plaintiff's Exhibit 16 might be sold separately. Is that correct?

A. That is what I told them, sir.

Q. Now, with reference to the fittings of Plaintiff's Exhibit 17, your instructions were that they were to be sold only to purchasers of Rex compressor and coupler outfits of Plaintiff's Exhibit 16?

A. Yes, sir.

Q. Did you instruct these men not to sell the fittings to garages, service stations, dealers and others, unless such dealer, garage or service station was already possessed of a Rex compressor outfit?

[fol. 134] A. Yes; or sold them a compressor outfit.

Q. Did you have an opinion from some patent lawyer?

A. I had, sir.

Q. Was it a written opinion?

A. No, it was a verbal opinion.

Q. Did you bring with you to the meeting a copy of the Gullborg patent?

A. Oh, I had a copy of it in the office; I don't think I had it in the meeting.

Q. So that you undertook to advise these men what would or what would not constitute patent infringement in the sale of this Rex equipment, without even having a copy of the Gullborg patent before you?

A. Well, I don't know what that would have to do with it, but I didn't have a copy of the Gullborg patent. I don't think that that would be material as to advising anybody as to the use of the equipment.

Q. Well, do you know what claims 1, 2, 3, 4 and 8 of the Gullborg patent are?

A. No, I do not.

Q. It would be necessary, wouldn't it, for anyone to advise on the question of patent infringement, to at least look at the claim that was involved?

A. Oh, I had read them, but as I say, I am not a patent lawyer; I was taking patent attorneys' advice on the matter.

Q. So that, while you didn't know anything about it yourself, you undertook to instruct these twenty-five or thirty men what might or might not be done?

A. I didn't say—I said there were around twenty-five men.

[fol. 135] Q. All right; around twenty-five men.

A. And I was advising them on advice given to me.

Q. And that was second-hand information. Your informant wasn't present at the meeting, was he?

A. He was not.

Q. Were any written instructions issued by you then or at any time with reference to his question——

A. I never gave any written instructions. I had an opinion of the thing, but I never gave any.

Q. Did you write the letters of Plaintiff's Exhibit 14-b and 14-d, or any part of them?

A. I did not.

Q. Have you seen them before (handing same to witness)?

A. I never saw this (indicating)—I guess it is Exhibit "a" of 14—I never saw that before. I did see this circular at one time, yes, sir.

Q. Did you participate in the preparation of that circular?

A. I said twice before, Mr. Ahlberg, that I did not.

Q. You were here a few moments ago when Mr. Dusenberry testified that that paragraph of the letter Plaintiff's Exhibit 14-b was prepared by you and handed to him?

A. I beg your pardon; Mr. Dusenberry said no such thing. He said he thought maybe it was prepared by me, but he wasn't sure.

Q. Well, you deny you did it?

A. I deny I prepared it, yes, sir.

[fol. 136] Q. You referred to the opinion of the Second Circuit Court of Appeals in the Adams Grease Gun case?

A. Yes, sir.

Q. Do you know what the Court held in that case?

A. I know what the Court held.

Q. What did it hold?

A. It held that the use of an Adams fitting was an infringement of the patent, and also held that the coupler that Adams had, which was a snap-on coupler, was an infringement of the patent.

Q. That is, the Court of Appeals for the Second Circuit sustained the plaintiff's contentions, the same as are being advanced in this case. Is that true?

A. No, I don't say it is the same as being advanced in this case. And I also know that the Supreme Court of the United States, on the question of monopoly and on one or two other things of the Alemite Corporation, allowed the appeal, and that——

Q. Now, just a minute, Mr. Van Kirk. When did the Supreme Court allow an appeal in the Adams Grease Gun case?

A. To my recollection, it was about last—well, it was prior to the time, or around about the time that you brought this action against the Rex Duplex; and we felt then that the matter would all be threshed out, and we would know where we were, in the Supreme Court. The matter was also up in the case that Mr. Clarke mentioned, in which Judge Schoonmaker,—the Erie case—Judge Schoonmaker allowed [fol. 137] an amendment there, and as I recall, in his opinion he said that there were certain matters that would be threshed out in the United States Supreme Court, since the certiorari was allowed.

Q. Now, Mr. Van Kirk, when you refer to the opinion of the Second Circuit Court of Appeals in the Adams Grease Gun case, do you refer to this opinion of which I hand you a copy, reported in 52 Federal 2d, 36 (handing same to witness)?

A. It is in addition to the one in 54 Federal 2d.

Q. Just a minute. This is the Second Circuit opinion in 52 Federal 2d, 36?

A. Well, I don't know.

Q. Well, look at it (handing same to witness).

A. It purports to be, Mr. Ahlberg, but I won't say that it is. The book speaks for itself, the bound volume.

Q. Well, you know that the opinion of the Second Circuit Court of Appeals that you have in mind is reported in 52 Federal 2d, 36. Is that correct?

A. I don't know the page, but I know it is in 52 Federal 2d; I believe 36 is right; I believe that is right.

Q. Now, it was a petition for certiorari that was granted by the Supreme Court in the Adams case, rather than an appeal, was it not?

A. That is right.

Q. You testified that the certiorari granted by the Supreme Court was denied by the Adams Grease Gun Company. Is that right?

A. Was denied?

[fol. 138] Q. Was withdrawn.

A. I said it was withdrawn, yes, on petition of counsel for the Adams Grease Gun Corporation.

Mr. Ahlberg:

That is all.

Mr. Clarke:

I would like to be informed, if your Honor please, at this stage, by counsel for plaintiff just what claims are to be relied on. That has not yet been stated.

The Court:

I noticed that.

Mr. Ahlberg:

Plaintiff relies on Claims 1, 2, 3, 4, 8, 14 and 15 of the Gullborg patent in suit.

Testimony of C. L. W. Trinks

C. L. W. Trinks, a witness for defendant, testified he is a professor of mechanical engineering at the Carnegie Institute of Technology of Pittsburgh and a consulting engineer, and has so been engaged and in mechanical pursuits since he graduated in 1897. Professor Trinks has been before the court before, has had a great deal of contact with patent litigation and has served as patent expert for the American Window Glass Company, Bethlehem Steel Company, Donner Steel Company, and quite a number of others. A part of his work at the Carnegie Institute is with lubricating [fol. 139] systems for applying lubricants for parts to be greased or oiled and to teach lubrication. He has known of the practice of forcing stiff lubricants, as grease, into concealed or isolated chambers since he went to school, from '93 to '97, and says:

Of course, before that time I was not interested in it, but at that time we had grease cups with springs on top, that is to say, we had grease cups similar to those which were placed in evidence here—I have forgotten the exhibit number, but they had on top between the lid and the grease a spring-pressed piston which would gradually force the grease into the concealed cavity.

Q. Were check valves of any kind used to retain the grease, once it was forced in, in any construction familiar to you?

A. Only on those which I have seen in patent descriptions. From my own recollection, I cannot recollect any in the early days.

Q. A check valve, incidentally, is a very common expedient for holding and retaining flowing liquids or fluids?

A. Yes. I would like to qualify my answer somewhat, by stating why they were not used. In those days we put the grease cup directly on the element to be lubricated, and therefore, if grease was once forced in, it would stay in; but if you use a long tube between the element to be lubricated and the grease cup, then, if you unscrew the grease cup, the grease would come back, because the pressure in the tube enlarges the tube, and as soon as you remove the pressure the pipe contracts again and forces the grease [fol. 140] back. Therefore, check valves would become necessary, just as soon as you use a long tube or pipe through which to force the grease or the oil.

Q. And you personally know or recollect instances of that kind in physical existence and operation, in your own experience?

A. Yes; not before 1921, though.

Q. Now, have you examined and do you understand the construction and manner of operation of the subject matter of patent 1,307,734, to Gullborg, on June 24, 1919?

Mr. Ahlberg:

Now, if your Honor please, I would like to interpose an objection to the present question, and to the further examination of this witness. It is apparent that the witness is being called as an expert witness. The Courts have held frequently that where we have an unusually involved mechanism, or scientific devices, or things that the Court is unable to understand, it is permissible to call an expert; but the patent here, and equipment involved, is exceedingly simple. The province of an expert is to explain ambiguities, and patents and equipment that the Court is not able to understand. I move therefore that the question be stricken, and that the further testimony of this witness be discontinued.

Mr. Clarke:

I scarcely appreciate the force of that objection, if your Honor please. It is quite customary to call experts, men

of mechanical and scientific ability—not necessarily to ex-
[fol. 141] plain what is obvious, and easily understood, and readable in the patent itself, but particularly, as in a case of this kind, where physical embodiments have been introduced of structures alleged to infringe the claims of this particular patent, to discuss differences if they exist, discuss similarities if they exist. It has certainly always been thought to be a matter of assistance to the Court, and especially where opposite views are entertained by opposing parties in litigation of this kind. And it seems to me that the objection at this stage is not well taken, and it should be overruled.

The Court:

What is your position, Mr. Clarke, with reference to the patents in suit? Do you concede that the claims in suit are valid?

Mr. Clarke:

We are not contesting the validity, your Honor, as I said at the outset.

The Court:

That is what I understood—that you were not contesting the validity.

Mr. Clarke:

No, sir. Our defense is non-infringement.

The Court:

What do you propose to ask of this expert witness then?

[fol. 142] Mr. Clarke:

I am proposing to ask him to identify, if he can, common subject matter expressed in the patent, inclusive of the drawings, the specifications and the claims, without asking the witness to apply claims, of course—That is your Honor's function. I am proposing to ask him to point out and support, if he can, defendant's position that there is not present in the defendant's construction the subject matter of these claims. We are taking it for granted and presume, although it may be a violent presumption, that plain-

tiff's attitude is the usual one of resting on the claims declared on, which they have just stated to be Claims 1 to 4 inclusive, 8, 14 and 15.

The Court:

Well, as I understood counsel in the opening statement, those are all combination claims, and he doesn't charge you with being a direct infringer of those combination claims, but being a contributing infringer by supplying to someone else some of the elements that enter into the combination, with knowledge that they are to be used for the purpose of being combined with other elements, which will infringe the patents in suit. Is that correct?

Mr. Ahlberg:

Yes: your Honor states it better than I could have stated it myself.

[fol. 143] Mr. Clarke:

That is exactly as I sensed their attitude, and it is a very cute position to take. We are prepared to meet that situation.

The Court:

I am just wondering, with that situation, whether you have any real thing here to get the opinion of an expert upon. Isn't that merely a question of fact, as to the fact of your sale to persons who intend to use that in connection with their combination structure?

Mr. Clarke:

Yes. I have gone just as far as that, and there we stopped. We say that under either condition, the combination of our fitting with their pump or gun and its coupling——

The Court:

On the mechanical device and its use, I can conceive that the opinion of Prof. Trinks would be very valuable to the Court, if we have to construe and determine what a machine is doing or a mechanical device is accomplishing; but, as I understand the charge here, being merely a charge that you

are a contributing infringer in the selling of a certain device, is the mechanical operation of the combination as a whole, or the several elements that go into it, of any particular importance, so far as their mechanical structure or oper-
[fol. 144] ation are concerned?

Mr. Clarke:

Surely your Honor would not waive out of the condition——

The Court:

Now, as I understand, it is charged that you sell these fittings to persons that intend to use them with the Alemite structure, in combination?

Mr. Clarke:

Yes, sir.

The Court:

And there is no charge that these particular elements when used with the Rex Duplex high pressure gun will infringe the plaintiff's patent. There is no such charge here, as I understand it?

Mr. Clarke:

No; we are beyond that point. We meet your Honor's position on it, and we so anticipate it. And we propose to meet the charge that the combination of our fitting with their gun and their coupler——

The Court:

Of course, if you wanted to show that this fitting would not work into their gun, or their lubricating combination, I think an opinion of an expert as to whether or not that was a workable combination, using your fitting in their structure,—we could very properly take the opinion of Prof. Trinks as to that.

[fol. 145] Mr. Clarke:

I don't have to go that far, your Honor. It does interfit, it will work with it. But we are standing on the language

of these claims. Your Honor only has to read this disclaimer in this patent to appreciate that the scope of this invention, if it is one—which we are not questioning—is certainly not as broad as that disclaimer; it is certainly not as broad as the condition which would have to exist for your Honor to take that position, I think. We say, and we have not yet abandoned the position in which we continue to say, that the combination of the fitting with their pressure gun and its coupling does not fall under any claim declared on. We say also that the combination——

The Court:

That is, you take the position that you can sell this fitting to a purchaser who you know intends to put it into an Alemite combination, without infringing the patent in suit?

Mr. Clarke:

That is the position we have tried to carefully avoid bringing into existence, the selling of our fittings to the users of Alemite equipment and for connection with their gun, because it would raise the very trouble that is existing here. We do say, however, that on a pure question of infringement—and I think that is that vital question in this case; this action is not brought for unfair competition, although that seems to be the substance of the evidence so [fol. 146] for advanced—We say that the combination—and I repeat it again—of our fitting as we make it (and your Honor has not yet had any clear discussion of what that fitting is, as made) with the patented Alemite gun, compressor and its coupler, as expressed in the claims declared on in this suit, is not an infringement. Now, we do take that attitude. We say further that the combination of the defendant's gun, compressor and coupler with the Alemite fitting is not an infringement.

The Court:

With that situation, probably we have a situation here where the opinion of Prof. Trinks might be of value.

Mr. Clarke:

It seems so to me; extremely.

The Court:

We will hear you.

Mr. Ahlberg:

Merely on the question of whether this defendant's compressor and coupler outfit of Plaintiff's Exhibit 16 is usable in conjunction with Alemite pin fittings of Plaintiff's Exhibit 4?

Mr. Clarke:

I didn't get that.

Mr. Ahlberg:

As I understood it, it is the Court's present idea to let Prof. Trinks testify with reference to the defendant's sale [fol. 147] of compressor and coupler outfits of Plaintiff's Exhibit 16, for use in conjunction with plaintiff's Alemite fittings——

The Court:

I think the thing is broader than that. The question is whether or not these fittings when brought into combination with your structure will infringe your combination claims. Am I right?

Mr. Clarke:

That is the position we must meet. If we cannot meet that, our case is different from what we think it is. I don't know whether your Honor has read this patent carefully——

The Court:

No, I have not read it carefully.

Mr. Clarke:

(Continuing)—or has read that disclaimer which they had to enter on Claim 12. That claim is broad enough, if your Honor please, to cover what the plaintiff is insisting on in this case. No other claim in the patent is sufficiently broad, we say.

Mr. Ahlberg:

I think we get back to the proposition of whether this is an extremely simple patent case and whether simple structures are involved, or whether——

The Court:

Well, we will hear Prof. Trink's testimony with reference to this matter. Go ahead.

[fol. 148] Mr. Ahlberg:

May I have an exception, your Honor.

The Court:

We note you an exception.

Q. (Question read as follows: Now, have you examined and do you understand the construction and manner of operation of the subject matter of patent 1,307,734, to Gullborg, on June 24, 1919?)

A. I have read it about ten times, and I thoroughly understand it.

Q. Prof. Trinks, there is of record in this case an affidavit of G. S. Rogers, with which is filed a photostat or blueprint drawing marked Exhibit 1. I show you that drawing, and ask you what that means, in your opinion (handing drawing to witness). In that connection, I show you also Defendants' Exhibit "A", which you may understand to be a physical embodiment of the defendants' construction in this case.

A. The drawing marked Exhibit 1 in Exhibit "C" and "D" (the Rogers affidavit) is a reproduction——

Mr. Ahlberg:

Just a minute. I wonder if I may interrupt, for the purpose of the record? Now, Mr. Clarke, you have in evidence a copy of that drawing, which is marked as Defendants' Exhibit "B". Wouldn't it be better to use that than to use this duplicate copy?

Mr. Clarke:

Yes, we might simply identify it as the drawing appearing with the same affidavit.

[fol. 149] A. (Continuing.) There are two drawings.

Q. Well, Exhibit 1 is the one I want.

A. Drawing Exhibit 1 in the affidavit of G. S. Rogers: This is a sectional and external view of the Rex fitting of hose coupling.

Q. Incidentally, professor, this particular drawing is the same as the drawing marked Defendants' Exhibit "B" in this case, is it not (handing Exhibit "B" to witness)?

A. That is correct. And Defendants' Exhibit "A" is an enlarged scale reproduction of the Rex hose coupling, partly cut away, so that the interior construction may be observed and studied.

Q. And you understand this construction in relation to the particular drawing, and do you find it corresponds in every respect?

A. It corresponds in every respect. There may be slight differences in a few thousandths; but with those exceptions, that is correct.

Q. Referring to this drawing, Exhibit "B", what is the part marked b?

A. The part marked small b is a washer of a suitable elastic material, used for tightening.

Q. Do you find such washer in the physical specimen, Exhibit "A"?

A. There is such a washer in the Exhibit "A". However, there seems to be a difference, inasmuch as in the drawing the washer is wholly enclosed on three sides, whereas here (indicating physical specimen) it projects outside slightly.

[fol. 150] Mr. Ahlberg:

I wonder if the Court might look at this copy of the drawing, and have the professor refer to his own copy.

Mr. Clarke:

Certainly. (Handing copy of drawing to the Court.)

Q. Is this washer movable with relation to the portion on which it is mounted, or is it fixedly set?

A. It is fixed in the part in which it is mounted.

Q. There is then no possibility of any longitudinal movement of this washer, is there?

A. There is possibility of longitudinal movement of this washer with regard to the lower part of the fitting, but not

with regard to the part on which it is mounted; and with regard to the lower part of the fitting the movement is what I would call a helical movement, because as it is screwed down it has both translation and rotation, that is to say, longitudinal motion and rotary motion.

Q. And that is only for the purpose of bringing the connecting parts into close contact, is it not?

A. That is for the purpose of bringing the connecting parts into close contact, that is correct; and for sealing.

Q. What is the part marked capital C?

A. The part capital C is the outer housing of what I call the pump half of the coupling. I call the part which is connected to the hose the pump half of the coupling, and the part which leads to the part to be oiled the receiving half of [fol. 151] the coupling. This part C then is the outer housing of the pump half of the coupling.

Q. What is the construction of the part marked small c?

A. The part marked small c is the ordinary bayonet lock, that is to say, it has an aperture opening or a slot, which is partly longitudinal and partly transverse or circumferential.

Q. Is the transverse portion inclined or is it exactly at right angles with the longitudinal shoulder?

A. It is exactly circumferential; it has no inclination towards the circumferential line.

Q. So that, in connecting the bayonet joint portions, once the enclosing part C is rotated, there is no additional binding effect, is there?

A. I didn't understand your question.

Q. When the so-called cup fitting, as the term is used in this case, is inserted within the bayonet joint connection and then rotated, there is no additional longitudinal movement of the cup fitting, or its pins, in one direction or another, is there?

A. None except to take up a small clearance, which there must be; in order to get the pin in, the slot must be slightly wider; and that is the only one there can be.

Q. And is such bayonet joint construction a matter of common knowledge, in your experience?

A. Oh, yes; that was used before I was born.

Q. That is the same joint that has been used in the rifles of the Civil War, isn't it?

A. I don't know; I wasn't in that war.

[fol. 152] Q. Now, do you find in this bayonet joint any transverse portion of a slot inclined from the longitudinal portion thereof toward the outer end of the coupling member?

A. I do not; except the part where it enters. Of course, that is not meant. The part which is meant is, as I take it in the Gullborg patent, the part which in the Rex Duplex fitting is truly circumferential, and which I will mark on this drawing by the letter X. That is what I take to be meant in the Gullborg patent, the part which is inclined, and which is not inclined in the Rex structure.

Q. Do you find in this Rex structure any perforated sealing disc slidably mounted in an enlarged portion of the bore of any holding member?

A. I do not.

Q. Do you find in the construction any spring confined between the ends of a conduit and the disc, for urging the disc against the coupling member?

A. I do not. Of course there is a spring shown in this exhibit, and I will mark this spring with the letter Y, but this spring serves no such purpose. It is simply a lock washer, the name as we have on all nuts in automobiles, only instead of having only one turn, it has several turns. It is there solely for the purpose of keeping these two parts from jarring loose.

Q. Do you find any sealing disc whatever, of any kind, other than the thing you have called the washer, marked small b?

A. I do not.

Q. Do you find in this Rex construction any means provided for sealing joints between the coupling member, [fol. 153] and for removing excess lubricant from the adjacent ends thereof, when the coupling members are uncoupled?

Mr. Ahlberg:

I object to the question. All Mr. Clarke is doing is reading from the claim. It is the province of the Court to determine whether or not infringement is present in this case.

The Court:

That is true, of course. The Court has to perform that duty.

Mr. Ahlberg:

Well, all Mr. Clarke is doing is reading the claim and asking the witness if he finds——

The Court:

If he finds the elements there in the structure of the defendant. He may go ahead.

Q. (Question read.)

A. I find the first part, that is to say, I find means for sealing, namely, the washer b; but I find no means for removing excess lubricant. And no such means are necessary with the Rex construction, although in my opinion they are necessary with the Gullborg construction.

Q. You do find then such means present in the Gullborg construction?

A. I do.

Q. Please describe briefly what they consist of?

A. May I refer to the other drawing, Mr. Clarke?

[fol. 154] Q. Yes. You are referring now to the second sheet in the Rogers affidavit, which is presented as showing enlarged views of the Gullborg construction?

A. I do.

Q. And you may refer to that, if you desire.

A. I am now referring to a sheet marked Exhibit 2, which is part of the affidavit of Mr. G. S. Rogers, marked Exhibit "C" and "D". This sheet was prepared without my knowledge, and therefore I have taken the trouble to check it carefully with the drawings of patent 1,307,734, which is the Gullborg patent in suit. I have found that everything is correct, with the possible exception that the numeral 24 refers to a point somewhat lower down, in the patent—It refers to the same vertical line, but somewhat lower down, in the patent. Otherwise the drawing is just the same. I understand it was prepared because the figure numbered 5 of the Gullborg patent is so small that it is hard to see without a magnifying glass.

Referring now to the blueprint in question, I find in the Gullborg structure a washer marked 26, which is pressed against the receiving half of the coupling against its face, which receiving half is marked number 29, by the spring 27. In uncoupling the two halves after the grease gun has been used, it is necessary, on account of the inclination of

slot 23, shown on the righthand side, to bring them closer together. Bringing them closer together pushes an extra dose of grease out of the spring chamber, in which spring 27 rests, into the receiving half 29 of the coupling. Then when the pin 31 of the receiving half 29 has reached the [fol. 155] axial, the longitudinal portion of the slot, the two halves snap apart, and by that action the spring 27, resting against its upper abutment 28, pushes the washer 26 downwardly, thereby creating a slight vacuum in the chamber filled by the spring 27—or partially filled by the spring 27. That vacuum sucks off any oil or grease which might have escaped between the face, not marked here, of the receiving half of the coupling and the leather cup. As before mentioned, this device is very desirable in the Gullborg structure, and is unnecessary in the Rex structure, for the following reasons: In the Rex structure, shown on Defendants' Exhibit "B", the washer b can be pressed against the receiving half of the coupling with a great force, in such a manner that any dirt which is very likely to be on the face of the coupling is covered over by the yielding washer, and therefore no grease is likely to escape. In the Gullborg structure the spring 27 does not press uniformly against the bottom of the coupling. If we would take the Gullborg coupling apart, we can readily see that it does not press uniformly, but there is a space against which the spring exerts no pressure. If a piece of dirt lies on the face of the coupling at that place where that spring does not press, the grease will escape, and it is therefore very desirable to have some means which will afterwards pull that grease back which has escaped. I believe that answers your question.

Q. Now, in view of what you have just said, professor, I call your attention to the language in the specification appearing at line 8, page 2, as follows: "A perforated cup [fol. 156] leather or sealing disc 26 is slidably mounted in the annular portion 24 of the bore of the coupling and is urged against the shoulder 25 by means of a coiled spring 27." That description tallies and checks with the description and your understanding as you have given it, does it not?

A. Correct; it does.

Q. Can you reconcile that statement I have just read with this portion, beginning with line 69 of the same page: "When the coupling member 21 is then turned to permit

the pin 31 to slide in the longitudinal portion of the slot 22 the sealing disc 26 is moved toward the end of the coupling member 29 under the pressure of the spring 34''?

A. I believe that is a mistake. I should think that he meant spring 27, instead of 34. I believe that is a mistake in the patent.

Mr. Ahlberg:

Q. A mere typographical error, don't you think, professor?

A. I don't know whether it is, but it would be queer that he would make a typographical error in two places; because, if one of the two numerals were wrong, it might be a typographical error. But it is an error anyway. Who made it, I do not know.

Q. It is clear from the patent which spring is intended, isn't it, professor?

A. I think so; quite clear.

Mr. Clarke:

If your Honor please, in view of the witness's identification of the structure of the Gullborg patent, I now renew [fol. 157] my offer of Defendants' Exhibit "C", which was withdrawn.

The Court:

Yes; the other witness couldn't identify it. It may be admitted now.

Mr. Clarke:

Q. Referring further to the Gullborg patent, I observe, professor, that the pin 31 extends entirely through the cup fitting. Is that your understanding?

A. It is.

Q. How does that compare with the construction of the Rex device, as shown in the physical specimen and the drawing?

A. In the Rex fitting there are two pins, or lugs—whatever you want to call them; it doesn't make much difference—which do not extend all the way through. Of course, such pins have been used in bayonet locks from time immemorial; otherwise, you couldn't very well have a bayonet lock, unless you had something to push that pin on the side to engage with the slot and the corresponding other half.

Q. And in defendants' construction what, if any, advantage is there present, in so far as the absence of the middle portion of this pin is concerned?

A. Well, you can have different means for supporting the spring. Also, if the pin does not go all the way through, it would constitute a source of leakage,—if it doesn't go all the way through.

Q. I didn't get that.

A. It would constitute a source of leakage, because if it [fol. 158] didn't go all the way through, and was poorly fitted, the oil and grease would leak out.

Q. Would it also give any freer circulation of grease, by omitting the middle portion of the pin?

A. Yes, but that is not material.

Q. Do you find the spring between the ball valve resting against the pin in defendants' construction?

A. No. In the defendants' construction the spring which holds the ball shut does not rest against the pin, because it cannot; the pin doesn't pass through, and therefore it does not offer an abutment, and therefore the spring cannot rest against the pin in the defendants' construction.

Mr. Ahlberg:

If your Honor please, we have now spent about fifty minutes on exactly the same sort of thing that my objection was directed to; that is; your Honor can see just as readily as—

The Court:

Of course, that is perfectly self-evident, what the professor is talking about now.

Mr. Ahlberg:

I don't want to be making that same objection all the time. It seems to me that the expert is spending more time on these simple matters than is warranted.

The Court:

Yes, that is probably true, so far as this structure is concerned, because it is perfectly selfevident from an examina- [fol. 159] tion of the two structures. The differences are perfectly apparent.

Mr. Clarke:

I am entirely satisfied to submit that matter to your Honor's discretion and comparison of the structures themselves.

(Recess taken until 1:30 o'clock P. M.)

Q. Prof. Trinks, I note that in the specification reference is made to the "hollow valve 33 which is urged against its seat by the spring 34." What does the term "hollow valve" mean, as you understand the disclosure?

A. The valve is just as the specification says, hollow inside. It is a spherical shell,—or a semi-spherical shell, it is not a complete sphere, it is not a ball.

Q. Is that an advantageous construction for any reason that you know of?

A. It is an advantageous construction in the Gullborg patent, because in the Gullborg patent the spring rests on a pin and is therefore supported in a very wobbly manner, and it is therefore very desirable to have that spring properly guided by the inside of the valve; otherwise, there is no advantage. Otherwise, a solid ball is much better, because a solid ball will be tight in any position whatsoever, being spherical, whereas it is extremely difficult to make a hollow valve that really is tight in all positions.

Q. Do you find any such hollow valve in defendants' construction?

[fol. 160] A. No; in all of those which I examined I found a solid ball.

Q. As a matter of fact, do you find such hollow valve in any physical construction introduced in this case?

A. I haven't seen any.

Q. Now, comparison has been made heretofore between the dimensions, the relative dimensions of the cup or pin fitting of the Alemite type and of the Rex type. Do you find that comparison to be fair and to exist?

A. May I refer to some exhibits?

Q. Certainly.

A. (Witness referring to exhibits.) These exhibits on the outside look very much alike, and there is a reason for it. First of all, the part below the hexagon, that is to say, the threaded or screw parts, must necessarily be alike, because

that is a ⅛-inch gas pipe, the standards for which were laid down by the American Society of Mechanical Engineers many, many years ago, so far as I know, in the last century, and which have been adopted by the automobile builders, and therefore that part certainly cannot be changed, that is given. Then it is necessary to screw the fitting in, into place, and for that we use a hexagon, so as to use an ordinary wrench. The idea then is to use a hexagon bar which is a little bit larger in diameter than the pipe thread, so that the wrench will not mar or injure the thread. The next larger size, that is to say, the size that is just a little bit larger than the pipe thread, is a 7/16 hexagon, which is standard. We can buy ⅜ and 7/16 and ½. Now, the ⅜ would be too small, [fol. 161] and the ½ would be rather large, because we try to keep these things just as small as possible. Then above the hexagon bar we again make it as large as possible within the diameter of the hexagon bar which we have bought, making a small prong for the purpose of preventing the marring up of the fitting above. That determines the diameter from the prong. The length we keep as short as possible, because we do not want to have it stick out more than necessary, it is more easily broken off and also costs more. Now then, the dimensions and the length are determined by the pressure which we wish to carry. If we wish to carry only a pressure of fifty pounds per square inch, we could make it a whole lot shorter, but we must have a certain thickness to the exposed prong of the fitting, which I will mark Z on Defendants' Exhibit "B". If we wish to carry a pressure of ten thousand pounds per square inch, that prong is not any too strong as it is. The distance from the lug or pin up is determined by the pin and the size of the bar; and if I am not mistaken, a Rex fitting is slightly longer from the lug or pin up. But the designing engineer hasn't very much chance there to vary. If he uses a bayonet type coupling—a standard type of bayonet coupling, with lugs or pins sticking on the side,—he cannot very well have anything else but this. And that explains the similarity, without any of the other reasons.

Q. Well, what raw material do you understand these fittings are made from?

A. From a hexagon bar, which may be either brass or steel.

[fol. 162] Q. That is, a hexagon bar turned down at each side of the original hexagon faces, which then provide a turning nut?

A. Well, I wouldn't call it a turning nut, but I would say faces for turning, the same as the top of a cap screw; it isn't a nut really, but it will have the same faces as a nut.

Q. Well, nut-like faces for application of a turning wrench?

A. That is it; hexagon, for application of a wrench.

Mr. Clarke: Cross-examine.

Cross-examination.

Mr. Ahlberg:

Q. I presume you have examined an Alemite coupler such as Plaintiff's Exhibit 5, have you not?

A. I have.

Q. I presume that you know that the plaintiff in its commercial structure employs within the sleeve of the coupler two cup leathers instead of one, as shown in the patent drawings?

A. I observe that.

Q. Do you know what the purpose of the inner cup leather is?

A. I don't know that I am certain, but I judge it would be for the purpose of preventing leakage in the opposite direction.

Q. I think that is right; and that is desirable, is it not, because the plaintiff in its commercial structure mounts its [fol. 163] coupler swivelly instead of fixedly to the hose—with respect to the hose, as shown on that patent. Is that right?

A. May I examine that large one there?

Q. Yes. (Handing exhibit to witness.)

A. That is correct.

Q. Will you refer a moment to the drawing Defendants' Exhibit "C"? In that drawing the cup leather 26 corresponds to the outer cup leather in the plaintiff's coupler of Plaintiff's Exhibit 5, does it not?

A. Will you repeat the question?

Q. Yes. In the drawing of Defendants' Exhibit "C" the cup leather 26 corresponds to the outer cup leather in the plaintiff's commercial structure, Plaintiff's Exhibit 5?

A. Correct; to the one which is nearest the exit in Exhibit 12, nearest the exit.

Q. I presume you have examined the defendants' fittings like Plaintiff's Exhibit 17, a cut-open sample of which is exemplified here in Plaintiff's Exhibit 35?

A. I have.

Q. Are those fittings made so that they will cooperate with the plaintiff's commercial type of coupler of Plaintiff's Exhibit 5?

A. Yes, they are so made; and I told you that was by engineering necessity.

Mr. Ahlberg:

Now I object to the argumentative part of the answer, if your Honor please. I move that it be stricken.

[fol. 164] The Court:

We decline to strike that.

Q. It is true, is it not, that the defendants might have made their fittings of such a size as to prevent cooperation with the plaintiff's couplers of Plaintiff's Exhibit 5?

A. Yes, they might have done so, but of course that would have violated all laws of standards, because the Society of Automotive Engineers is very insistent upon standards, and competing manufacturers are sooner or later compelled to comply with a common standard and have everything as nearly alike as possible.

Q. That is, in order to enable the defendants to find a market for their fittings, it was necessary to make them of such a size as to adapt them for use with Alemite coupler of Plaintiff's Exhibit 5. Isn't that so?

A. I didn't say that.

Q. Well, the reason that the dimensions of the connecting end of the plaintiff's Alemite fittings of Plaintiff's Exhibit 4 are known as standard is because the Alemite Corporation has made its fittings of those particular dimensions and exclusively sold them to the automotive trade. Isn't that true?

A. That is true, with one qualification, namely, that the plaintiff used a pipe thread which was standard, and then made the rest of the parts so as to comply with the dimensions which were virtually dictated by the use of that pipe thread.

Q. Now, will you look at this assortment of fittings (handing same to witness), and state whether it is not true that

[fol. 165] there is a variety of threaded ends on the fittings, so that they may be screwed into bearing holes of various thread sizes?

A. That is correct. There are various pipe threads, but the majority of them are, of course, ⅛-inch pipe threads.

Q. The defendants might have made their threaded—or the defendant might have made its fittings with the threaded ends of ⅛-inch pipe thread standard, and made the connecting end of a diameter and dimension on the outside so that it would not coact with the plaintiff's Alemite coupler. Isn't that true?

A. Oh, they could have, but that would be suicide, because they couldn't compete.

Q. That is, it couldn't compete with the Alemite system, could it?

A. It couldn't compete with the sizes made by the Alemite Corporation, because they have made theirs as small as engineering requirements dictate.

Q. Well, it is economical, isn't it, to make the fittings of the smallest practicable size stock?

A. Absolutely.

Q. Prof. Trinks, will you please look at this drawing (handing same to witness), and tell us whether it correctly illustrates the defendants' ⅛-inch straight fitting of the type exemplified in Plaintiff's Exhibit 17?

A. It does.

Q. Now, that fitting is shown in conjunction with an Alemite hose and coupler of the type exemplified in Plaintiff's Exhibit 5, is it not?

[fol. 166] A. I can't tell, because—Oh, yes, that is correct, that does that. The inclined part of the slot is there; it does show that correctly.

Q. Now, in the middle figure on this drawing, part of the coupler shell is shown in elevation and part in section. Isn't that true?

A. Part of it is an outside view and part of it is a section; that is correct.

Q. And of course, the internal part of the upper half is concealed, because the drawing is partly in elevation. Isn't that true?

A. Correct.

Q. But the drawing does illustrate the outer of the two cup leathers employed by the plaintiff in its commercial coupler?

A. It does.

Mr. Ahlberg:

I offer the drawing in evidence, and ask that it be marked Plaintiff's Exhibit No. 45.

Q. Prof. Trinks, it would be possible, would it not, for the defendants to make the lugs of a larger diameter, so that cooperation with the Alemite coupler of Plaintiff's Exhibit 5 would be impossible. Isn't that true?

A. That is true, but that would not be economically desirable, because the bending moment which tries to break off the lugs marked z by me on Defendants' Exhibit "B" is dependent upon the diameter of the little pin or lug. The larger you make that lug, the greater is the bending moment, and the more readily the lug z—or the fork z is [fol. 167] broken off. Consequently, if you make the pin and lug larger, you must make the lug z deeper, and immediately you make the construction too expensive.

Q. Now, in the operation of these high pressure lubricating systems, what pressures may be reached?

A. Anything up to eight, nine or ten thousand pounds per square inch, depending upon the clogged condition of the bearing.

Q. That is a lot of pressure, isn't it?

A. That is a lot of pressure.

Q. And the tendency of the coupler to separate from the pin fitting operates to pull the lugs out of the tubular member of the fitting. Isn't that true?

A. It does.

Q. Now, in the plaintiff's construction, the pin extends entirely through the tubular member, does it not?

A. It does.

Q. Would you say that that form was preferable over the form of the defendants' fitting, where two pins are employed, and which are driven into the tubular member from opposite sides?

A. I can only say that it is not preferable, because you must in that case rest—or you do in that case rest the spring on the pin, and that doesn't give as good a support to the spring as resting it all the way around on a tube, or at

least something which has more bearing surface than the pin offers. And as far as I know, no pins have been sheared off; in other words, the shearing strength of the pin is sufficiently large. I don't know of any having been [fol. 168] sheared off, except under extreme pressures. Of course, you can always destroy anything by extreme pressures.

Q. Well, in the use of extreme pressures, there would be less tendency to shear off the ends of the Alemite pin than there would be to shear off or pull out of place the lugs employed by the defendant in its fittings. Isn't that true?

A. Your question is ambiguous. I think I can answer it this way: The shearing strength or the shearing conditions would be the same in both cases, but the tendency to bend would be different; and in bending I am forced to admit that the through pin has greater strength, but not in shearing.

Q. Now, you have pointed out that the defendants might have made their cross pins of a larger diameter than those employed by the Alemite Corporation, so that cooperation with an Alemite Coupler would be impossible, and you have pointed out that such a construction would be undesirable, because the bending forces operating on the fitting would have more of a tendency to pull the lugs out of the tubular member?

A. I didn't say that; I said it would have a tendency to break the fork Z on Defendants' Exhibit "B", because the lever arm becomes greater. The greater the bend, the greater is the lever arm. May I illustrate that on the same exhibit?

Q. Yes.

A. I have made a sketch on Defendants' Exhibit "B", showing that the lever arm which tends to break off the fork Z is equal to the radius of the pin, and therefore the larger that radius the greater is the bending moment or lever [fol. 169] arm which tries to pry the fork Z and destroy it.

Q. Now, by the use of a hardened steel coupler, pressures such as are ordinarily reached in the employment of this high-pressure lubricating system might be withstood, notwithstanding that the pin were increased to such a size that it would not permit cooperation between the fitting and the coupler. Isn't that true?

A. That could be done; but again, it would not be economical to do so.

Q. The defendants would only have to increase the diameter of their pins a few thousandths of an inch, would they not, to prevent cooperation of their fitting with the couplers of the plaintiff?

A. That is correct; but then, of course, anybody could file them off if he wanted to.

Q. And the increase in the lever arm is only equal to one-half of the increase in diameter, is it not?

A. That is what I stated here.

Q. Now, the defendants by the employment of pins of the same diameter that they use now, but placing the pins a lesser or greater distance from the discharge end of the fitting might have made their fittings so as to prevent cooperation of the fitting with the Alemite coupler of Exhibit 5. Isn't that true?

A. Yes; and if I am not mistaken, they are slightly different—at least, those that I have seen are slightly different.

Q. Well, if there were a difference of one or two thousandths of an inch, cooperation between the defendants' fittings and plaintiff's Alemite coupler of Exhibit 5 would still be possible?

[fol. 170] A. Oh, yes, would still be possible.

Q. But I mean, move the position of the pin maybe an eighth of an inch one way or the other, would prevent cooperation between the fittings and the coupler. Isn't that true?

A. An eighth of an inch, I think, is still within the range. You can see by reference to Plaintiff's Exhibit 12 that the spring can move quite a distance. Of course, that is not a large scale, enlarged model, but it can move quite a distance—move quite a distance.

Q. Well, how much would you say the defendant's location of its pins would have to be moved, to prevent cooperation between the defendants' fittings and the plaintiff's coupler of Exhibit 5?

A. About an eighth or a tenth of an inch.

Q. And if the defendants' pins were located either an eighth of an inch above or below their present position, then cooperation between the fittings and plaintiff's coupler would be impossible. Is that correct?

A. Yes, sir.

Q. Now, the defendants might also have lessened the outside diameter of the tubular member, to prevent coopera-

tion between the fittings and the Alemite coupler. Isn't that true?

A. They might; but that is undesirable, because the smaller it is, the more easily it is broken off.

Q. How much increased cost would be involved in the lengthening of defendants' pin fittings, to permit the change of location a tenth of an inch, as you have said, of the pins, to prevent cooperation between the defendants' [fol. 171] fittings and plaintiff's coupler of Plaintiff's Exhibit 5?

A. About five per cent of the material cost, and making the material and labor about equal, it would be about two-and-a-half per cent of the total cost.

Mr. Ahlberg:

That is all.

Redirect examination:

Q. Prof. Trinks, I neglected to ask you on direct whether you had examined any prior patent or publication which would have any comparable relationship or similarity to the subject matter of the Gullborg patent in suit. Have you?

A. I examined a number of them.

Q. Did you select from that number any one or more which are worthy of attention and discussion?

A. Well, the French patent to M. Seng is very pertinent.

The Court:

In view of the fact of the admission of the validity of the Gullborg patent in this case, is this evidence of any value to us?

Mr. Clarke:

Only in the way of limitation of claim, your Honor. We think it is always proper and permissible to introduce prior art for that purpose. We make no attack on the validity, by this evidence. We think we should be permitted to introduce this particular one, which is the only one I think [fol. 172] Prof. Trinks has selected, in showing whatever it shows.

The Court:

All right; go ahead.

A. (Continuing): The patent is to M. Seng, French patent No. 468,869, published July 18, 1914.

Q. Do you have copies of the specification as well as the drawing of this patent?

A. It has only one drawing, and there are here three photostats of the French specification.

Q. And you are familiar with the French language, are you not?

A. I am.

Q. Please state generally what is the disclosure of this patent, as to its main elements and manner of operation?

A. The patent shows a coupling to be used for grease lines, for forcing grease or oil under pressure. It uses the word "graissage", which means lubrication in general. The coupling consists of two halves, one containing a ball or sphere which is pressed against closure by a spring. That corresponds to what has been called in this suit the pin type coupling. It is screwed into the part to be lubricated, but it is not a bayonet lock. Instead of the bayonet lock, that patent has a lip mentioned B, over which the other half of the coupling, which I have called the pump half of the coupling, slips. In the patent the two parts are shown separately, Figure 3 being the one that corresponds to the pin type; that is shown here upside down in regard to the other half of the coupling, Figure 1. Figure 1 has an inner [fol. 173] part and an outer sleeve, together with a washer, which washer tightens against the part of the coupling which is shown in Figure 3. There is a system of three levers, which are so arranged that, after the coupling is pushed into place, it holds by the force of these three levers; it requires considerable force to pull it apart; but it shows that at least the thought of forcing grease under pressure through a check valve, and making it detachable, was published by Mr. Seng in 1914, before the war broke out.

Mr. Clarke:

I offer the copy of this patent, including the drawing and specification, as Defendants' Exhibit "D". That is all.

Defendants rest.

Rebuttal

Testimony of Don Alexander

Don Alexander, who testified previously, as assistant general manager of Alemite Corporation, identified Plaintiff's Exhibits 43 and 44 as its products, and that they form a part of the Alemite-Zerk, or push type, equipment manufactured and sold by Alemite. He identified what is known as a push type or Zerk compressor used with fittings of the type evidenced by said exhibits. Fittings like Exhibit 43 are made and sold to the Ford Company by plaintiff, and the Alemite push type compressor is in evidence as Plaintiff's Exhibit 46.

[fol. 174] Testimony of Elwood Hansmann

Elwood Hansmann, who testified previously as a member of the firm of plaintiff's counsel, has been active in the prosecution of the litigation under the Gullborg patent in suit, and is familiar with this litigation. He has looked at the Seng French patent No. 468,869, Defendants' Exhbit D, and is also familiar with proceedings in the several suits in which the Circuit Court of Appeals for the Sixth Circuit considered in Lyman vs. Bassick and other cases reported in 18 Fed. (2) 29. That the Seng patent was considered in Bassick vs. United Grease Gun Corporation, 40 Fed. (2) 549, but can't say without checking up as to Bassick vs. Ready Auto Supply Company, 22 Fed. (2) 331. It was considered in the Adams Case, 52 Fed. (2) 36, and has been used as an example of the prior art in numerous suits under the Gullborg patent in suit. He produced a petition for rehearing filed by the O. K. and Larkin Companies in Bassick vs. O. K. Manufacturing Company, et al., 18 Fed (2) 29, and a supplement thereof. Said supplement was offered as Plaintiff's Exhibit 47 and the order denying the petition he says appears at page 463 of Volume III of the Adjudication Books. A loose copy of the order was marked Plaintiff's Exhibit 48. Following this order was a petition for certiorari to the Supreme Court, offered as Plaintiff's Exhibit 49 which was denied, and which appears at pages 461-2 of the same volume III.

As to these volumes counsel for plaintiff said:

[fol. 175] Mr. Ahlberg:

I would like to have marked for identification, or in evidence, these Adjudication Books, which are a convenient collection of the adjudications under this Gullborg patent. Mr. Clarke I believe, has been furnished with a set of them. They combine all the opinions and decrees in these Alemite cases. I think it is convenient to the Court to have them in one place. I make this offer, with the understanding that they are not to be reproduced in any printed record on an appeal at any time, merely for the convenience of the Court.

The Court:

If that is the understanding, they do not even need to be marked as part of the evidence. I can use them without that.

Mr. Ahlberg:

All right.

Witness explains that decree in the O. K. case appears at page 532, whereupon counsel stated:

Mr. Ahlberg:

I offer the decree in evidence, and ask that it be marked Plaintiff's Exhibit No. 50.— Mr. Bollinger calls my attention to the fact that I failed to give exhibit numbers to the orders denying the petition for certiorari in the Larkin and O. K. cases, and I ask that they be marked Plaintiff's Exhibits Nos. 51 and 52.

And further examined as follows:

Q. Now, Mr. Hansmann, the decree that was ultimately [fol. 176] entered in the District Court in the O. K. case refers to Plaintiff's Exhibit 109, does it not?

A. It does.

Q. Can you produce a copy of the drawing Plaintiff's Exhibit 109 in that case, and referred to in the decree?

A. I have here a drawing showing Plaintiff's Exhibit 109, referred to in this O. K. decree.

Q. Can you state whether the device shown in that drawing is a connector adapted and intended for use with Ale-

mite pin fittings of the type exemplified in Plaintiff's Exhibit 4 here?

A. It is.

Mr. Clarke:

If the Court please, I have been under some strain in trying to identify this line of testimony as rebuttal, and I am unable to do so. It seems to me it is a line of testimony, if it should have gone in at all, should have gone in the main case. It does not rebut anything we have introduced; it is an entirely new field, and new matter. I object to it.

The Court:

What does it tend to rebut?

Mr. Ahlberg:

Well, I think the defendants' testimony was to the effect that the defendants made and sold fittings which the defendants allege were made and sold with the intention and expectation that they be used in conjunction with certain [fol. 177] couplers and compressors made and sold by the defendants. The same contentions have been advanced by other defendants in other cases that have been decided by Courts in a number of cases, and I should think the Court here would like to have the benefit of those prior adjudications. They are not readily apparent from the reports in the Federal Reporters, and this would be a convenient way of collecting that information for the Court.

The Court:

Then they are not really rebuttal; you are just undertaking to offer those decisions before this Court now as affecting the infringement of the patent in suit?

Mr. Ahlberg:

Well, there is some question about whether——

The Court:

It is not really evidence. If it is objected to, we will have to sustain the objection. You are pursuing your objection, are you?

Mr. Clarke:

Yes, sir; we stand on our objection.

The Court:

All right. The objection is sustained.

Mr. Clarke:

And I also submit the testimony already given by this witness should be expunged, under the same objection.

[fol. 178] The Court:

Well, you are a little late on that; but I suppose you can make a motion to strike it out, if you want to. It really isn't of evidential quality.

Mr. Clarke:

It so seems to me. The prior decisions are always available.

The Court:

Of course, if you are offering copies of opinions and papers in other courts, if they have any evidential value as affecting the issues in this case, they may be offered.

Mr. Clarke:

And they should be certified, also.

The Court:

Oh, yes, they should be certified. If you are standing on your strict legal rights in regard to certification, we would have to strike these copies all from the record that have been offered here.

Mr. Ahlberg:

I think it would be extremely important to your Honor, and convenient——

The Court:

I assume you could call my attention to the published decisions of any Court.

Mr. Ahlberg:

That is true, but it is not apparent from the published decisions just what the structures were that were involved [fol. 179] in these prior adjudications. Now, I didn't quite finish what I started to say a while ago, which was to the effect that other defendants, for example this O. K. Manufacturing Company, and also the Larkin Manufacturing Company, made and sold compressors and couplers——

The Court:

We cannot decide this case on what some defendants did in another case. The question we have to pass upon is: Is what the defendant did in this case a contributory infringement of your patent? It is a mere argument to say that other Courts have decided so and so. I don't know that you need to have the opinions of the other Courts in evidence.

Mr. Ahlberg:

No, I don't think it is necessary to have the reported opinions of the other Courts in evidence, but it is not readily apparent from the opinions of the other Courts just what the structures were that were involved in those cases.

The Court:

Well, you would have us trying a half dozen different lawsuits, if this is to go in. We would be passing upon the correctness of decisions of other Courts on the testimony concerning the whole thing. We couldn't say whether that Court correctly ruled on that or not, or properly ruled on it, unless we had all the evidence before us. As I understand you, Mr. Clarke, you are now moving to expunge from [fol. 180] the record in this case the uncertified copies of opinions of Courts and decrees that have been offered?

Mr. Clarke:

Yes, sir, I do; I stand on that objection, or that motion.

The Court:

We grant the motion, and these papers, Plaintiff's Exhibits Nos. 47 to 52, inclusive, are stricken from the record.

Mr. Ahlberg:

I guess that is all, Mr. Hansmann.

Mr. Clarke:

I have no cross-examination.

Plaintiff rests in rebuttal.
Testimony closed.

IN UNITED STATES DISTRICT COURT.

Findings of Fact—Conclusions of Law—Opinion—Filed Jan. 12, 1934

SCHOONMAKER, J.:

This case having come on to be heard as to the defendants G. S. Rogers and R. W. Dusenberry, on bill, answer and proofs, the Court now makes the following findings of fact and conclusions of law.

FINDINGS OF FACT

(1) The plaintiff is the owner of United States Letters Patent No. 1,307,734, granted June 24, 1919, to Arthur V. [fol. 181] Gullborg, the invention disclosed therein, and all the rights and privileges under said letters patent.

(2) The said letters patent are good and valid in law.

(3) The defendants, G. S. Rogers, trading as the Rex Duplex Fitting Company, and R. W. Dusenberry, have infringed claims 1, 2, 3, 4, and 8 of said Gullborg Patent No. 1,307,734, by the sale of lubricating equipment, particularly fittings exemplified by Plaintiff's Exhibit No. 17, which fittings are adapted and intended for use in conjunction with the plaintiff's Alemite compressor and coupler outfits, like those exemplified by Plaintiff's Exhibits 5 and 6, and thereby have violated the rights of plaintiff under said letters patent.

(4) The defendants, G. S. Rogers, doing business as Rex Duplex Fitting Company, and R. W. Dusenberry, have infringed claims 14 and 15 of said Gullborg patent, by manufacturing and selling compressor and coupler outfits like those exemplified by Plaintiff's Exhibit 16, adapted and intended for use in conjunction with the plaintiff's Alemite pin-fittings of the types exemplified by plaintiff's Exhibit

4, and thereby have violated the rights of the plaintiff under said letters patent.

Conclusion of Law

The plaintiff is entitled to the relief prayed for in this bill of complaint as to these two defendants.

Opinion

This is a patent-suit involving Gullborg Patent issued June 24, 1919. Claims 1, 2, 3, 4, 8, 14 and 15 are in suit. [fol. 182] The defendant, R. H. Kidd, did not answer. The bill was taken pro confesso as to him, and a final decree was entered as to him, finding infringement by him of Claims 1, 2, 3, 4, and 8 of the Gullborg Patent. The other defendants answered, denying infringement, and the case was heard as to them on bill, answer, and proofs. As to them, we file herewith findings of fact and conclusions of law, holding them to be contributory infringers of this patent.

The Gullborg Patent covers a lubricating system of equipment, which has come to be practically of universal use in the lubricating of automobiles.

No question of its validity was involved in this suit. The patent has been held valid by many courts, and its validity was conceded at the trial.

Claims 1, 2, 3, 4, 8, 14, and 15 cover the combination of elements comprising the lubricating system, which includes pin-fittings permanently installed on each of the bearings of an automobile, the compressor or grease-gun from which the lubricant is forced into the bearing, and the coupler adapted to the pin-fittings, being designed to form the connection between the compressor and the pin-fittings.

The complete combination of the patent is made only when the grease-gun is attached by means of this coupler to the pin-fittings permanently installed in the automobile when built at the factory.

We find that the defendants are contributory infringers of the claims of the patent in suit through their sale of fit- [fol. 183] ting or coupling elements of the combination covered by the patent, with the purpose of bringing about its use in the patented combination. The evidence on this point is quite satisfying. The law is plain that the sale of an element of a combination for the purpose of bringing about its use in such a combination, constitutes the seller

a contributory infringer: Thomas-Houston vs. Ohio Brass Co., 80 Fed. 712. It is equally well settled that it is a contributory infringement to sell parts of a complete combination for use in conjunction with other parts of that combination which had been furnished by the patentee: Leeds & Catlin vs. Victor, 213 U. S. 301, and 213 U. S. 325.

The precise type of contributory infringement charged in the instant case was before the Circuit Court of Appeals of the Second Circuit in Bassick Mfg. Co. vs. Adams Grease Gun Corporation, 52 Fed. (2) 36; and that Court upheld the infringement charge.

We rest our conclusion in the instant case on the opinion of the Circuit Court of Appeals in that case.

Counsel for defendants cites the case of Radio Corporation vs. Lord, 28 Fed. (2) 257, (C. C. C. A. 3rd Circ.), as supporting defendants' position that they could not be contributory infringers, because so to hold them would be violative of the Clayton Act, Sec. 3, 15 U. S. C. A., Sec. 14. We cannot follow them there. The Lord case was not a patent-suit. As we view that case, our Circuit Court of Appeals merely held that a contract in a patented radio [fol. 184] receiver license-agreement to purchase licensor's vacuum tubes, was void. We have not that situation here. Neither of the defendants is licensed under the Gullborg patent.

A decree may be submitted granting the plaintiff the relief prayed for in its bill of complaint.

In United States District Court

Decree—Filed Jan. 19, 1934

This cause having been tried at final hearing upon the record and proceedings herein, upon testimony of witnesses heard in open court and upon briefs filed in behalf of the respective parties, the court having filed findings of fact and conclusions of law, counsel having been heard, and the court being fully advised in the premises, it is

Ordered, adjudged and decreed as follows:

(1) That the plaintiff, Alemite Corporation, is the owner of United States Letters Patent No. 1,307,734, granted June 24, 1919, to Arthur V. Gullborg, the invention disclosed

therein, and of all the rights and privileges under the said Letters Patent.

(2) That the said Letters Patent are good and valid in law.

(3) That the defendants, G. S. Rogers, doing business as Rex Duplex Fitting Company, and R. W. Dusenberry, have infringed claims 1, 2, 3, 4 and 8 of said Gullborg patent No. 1,307,734, by the manufacture and sale of lubricating [fol. 185] equipment, particularly fittings of the type exemplified in Plaintiff's Exhibit 17, which fittings are adapted and intended for use in conjunction with the plaintiff's Alemite compressors and coupler outfits like those exemplified in Plaintiff's Exhibits 5 and 6, and thereby violated the rights of the plaintiff under the said Letters Patent.

(4) That the defendants, G. S. Rogers, doing business as Rex Duplex Fitting Company, and R. W. Dusenberry, have infringed claims 14 and 15 of said Gullborg patent No. 1,307,734 by the manufacture and sale of compressor and non-suction effect coupler outfits like those exemplified in Plaintiff's Exhibit 16, adapted and intended for use in conjunction with plaintiff's Alemite pin fittings of the type exemplified in Plaintiff's Exhibit 4, and thereby violated the rights of the plaintiff under the said Letters Patent.

(5) That a writ of permanent injunction issue forthwith under the seal of this court, enjoining and restraining the defendants, G. S. Rogers, doing business as Rex Duplex Fitting Company, and R. W. Dusenberry, their agents, employees, as-ociates and confederates, from making, using and/or selling lubricating equipment, particularly fittings of the type exemplified in Plaintiff's Exhibit 17, and/or lubricant compressor and non-suction effect coupler outfits like those exemplified in Plaintiff's Exhibit 16, or any other device or devices embodying, or adapted and intended for use in apparatus embodying, the invention of claims 1, 2, 3, 4, 8, 14 and/or 15 of Gullborg patent No. 1,307,734, either for original equipment or for replacement under the guise [fol. 186] of "repairs" or otherwise, and from offering or advertising so to do, and from aiding or abetting or in any

way contributing to the infringement of said claims of said patent.

(6) That plaintiff recover from the defendants, G. S. Rogers, doing business as Rex Duplex Fitting Company, and R. W. Dusenberry, the damages which plaintiff has suffered and the profits which said defendants have made by reason of the said defendants' infringement of said Letters Patent, and that this cause be referred to Thos. D. Chantler, Esq., as Special Master of this court, to take and report an account of such damages and profits, and that the said defendants and their clerks, employees, associates and confederates, are required to attend before said Master from time to time as he shall direct and to produce before him such books, papers, documents and devices, and to submit to such oral examination, as he may direct.

(7) That plaintiff recover from the defendants, G. S. Rogers, doing business as Rex Duplex Fitting Company, and R. W. Dusenberry, plaintiff's costs and disbursements of this suit to be taxed by the Clerk, and that plaintiff have execution therefor against the said defendants.

F. P. Schoonmaker, United States District Judge.

Dated January 19, 1934.

[fol. 187] In United States District Court

Defendants' Petition for Appeal—Filed Feb. 17, 1934

Petitioners, G. S. Rogers, doing business as Rex Duplex Fitting Company and R. W. Dusenberry, defendants herein, respectfully represent

That petitioners, conceiving themselves aggrieved by the decree entered on the 19th day of January, 1934, in favor of plaintiff and against defendants and finding the defendants in contributory infringement of the patent in suit No. 1307734, and for the reasons specified in the Assignments of Error which is filed herewith, desire to appeal from said decree, returnable to the Circuit Court of Appeals for the Third Circuit.

Wherefore, petitioners pray that the said appeal may be allowed, that further proceedings in this Court be stayed, and that said appeal be made returnable to the United States

Circuit Court of Appeals for the Third Circuit, according to law, and that a transcript of the record, proceedings, papers and exhibits upon which said decree was made, may be duly authenticated and sent to the United States Circuit Court of Appeals for the Third Circuit; and that a citation may be granted directed to the above named plaintiff, Alemite Corporation, commanding it to appear before it, the said Court, to do and receive what may appertain to justice to be done in the premises.

And petitioners pray for all general and equitable relief.

Clarke & Doolittle, Counsel for Defendants.

[fol. 188] IN UNITED STATES DISTRICT COURT

ASSIGNMENTS OF ERROR—Filed Feb. 17, 1934

Now come the defendants, G. S. Rogers doing business as the Rex Duplex Fitting Company and R. W. Dusenberry, and say that in the record and proceedings of this Court in the above entitled cause and in the decree made and entered therein on the 19th day of January, 1934, there was manifest error, and for said error, defendants assign the following:

1. That the Court erred in finding as a fact that defendants' fittings are intended for use in conjunction with plaintiff's Alemite compressor and coupler outfits.

2. That the Court erred in finding as a fact that defendants have infringed claims 1, 2, 3, 4, and 8 of Gullborg patent in suit, by the sale of such fittings, alleged to be sold under such intention.

3. That the Court erred in finding as a fact that defendants have infringed claims 14 and 15 of Gullborg patent in suit by the sale of compressor and coupler outfits, alleged to be sold under intention of use with Alemite fittings.

4. That the Court erred in its conclusion of law that the plaintiff is entitled to the relief prayed in its bill of complaint.

5. That the Court erred in not finding for defendants on the defense of non-infringement.

6. That the Court erred in not finding for the defendants in the absence of any evidence of actual infringement of either of the claims in suit.

[fol. 189] 7. That the Court erred in not finding for the defendants in the absence of any evidence of intentional contributory infringement.

8. That the Court erred in not finding defendants' fittings and/or compressor and coupler outfits to be of different and non-equivalent construction from the respective elements of the patent in suit.

9. That the Court erred in not dismissing the bill of complaint, in view of the defenses offered.

Clarke & Doolittle, Attorneys for Defendants.

In United States District Court

Order Allowing Defendants' Appeal—Filed Feb. 17, 1934

This cause came on to be heard at this term and after consideration thereof it is hereby ordered that an appeal to the United States Circuit Court of Appeals for the Third Circuit from the decree of this Court entered and filed herein on the 19th day of January, 1934, be and the same is hereby allowed; and that so much of the transcript of the record herein as is necessary and essential to a proper presentation thereof to be forthwith transmitted to the United States Circuit Court of Appeals for the Third Circuit.

It is further ordered that the defendants' bond on appeal be fixed at $500.00, the bond to be filed within 10 days and to be approved by the Clerk.

F. P. Schoonmaker, United States District Judge.

Signed: February 17, 1934.

[fol. 190] Bond on appeal for $500.00 approved and filed Feb. 27, 1934, omitted in printing.

[fol. 191] Citation in usual form, showing service on Smith, Buchannan, Scott & Gordon, filed Feb. 27, 1934, omitted in printing.

[fol. 192] In United States District Court

Stipulation Re Original Transcript—Filed May 17, 1934

It is hereby stipulated, by and between the parties to the above entitled suit, subject to the approval of the Court:

That the original typewritten transcript of proceedings in the District Court shall be transmitted to the Circuit Court of Appeals for the Third Circuit as a physical exhibit; and,

That any party may refer to said transcript in the argument and briefs with the same force and effect as though said [fol. 193] typewritten transcript were printed as part of the record on this appeal.

Williams, Bradbury, McCaleb & Hinkle, Attorneys for plaintiff; Clarke & Doolittle, James Roy Van Kirk, Attorneys for Defendants.

Approved this 17th day of May, 1934.

F. P. Schoonmaker, United States District Judge.

IN UNITED STATES DISTRICT COURT

STIPULATED PRÆCIPE FOR TRANSCRIPT OF RECORD ON APPEAL—Filed May 17, 1934

It is hereby stipulated and agreed by and between counsel for the respective parties that the record on appeal in the above entitled cause shall comprise the following:

To be printed—

(1) Docket entries.
(2) Bill of Complaint.
(3) Answer to bill of complaint.
(4) Testimony of witnesses taken in open court, together with offers of evidence, rulings of the court, stipulations, and all other essential matters appearing in the record of [fol. 194] proceedings, partly in narrative form and partly in question and answer form, as appears in the stenographic transcript of the record and approved by the District Judge.
(5) Findings of fact, conclusions of law, and opinion of the District Court.
(6) Decree entered January 19, 1934.
(7) Petition for appeal.
(8) Assignments of error.
(9) Appeal bond.
(10) Order allowing appeal.
(11) Citation.

(12) Stipulation regarding original transcript of testimony on appeal as a physical exhibit, and approval thereof.

(13) Stipulated præcipe for transcript of record (this paper).

(14) Certificate of Clerk as to printed record.

Plaintiff's Exhibits

No.	Description
13	Alemite price list.
14	(a) to (i) Defendants' Circulars and price lists.
18	Defendants' sales literature comprising Rex price list and trade classification.
19	Copy of letter from Dusenberry to Hahn.

[fol. 195]

21	Receipt to Wade's Service, Inc., representing transaction involving 50 Rex fitting
24	Sales slip identified by Ballu
26	Sales receipt identified by Nelson Cornell.
28	Receipt representing the Ulrich transaction.
29	American Legion publication containing Robert H. Kidd advertisement of defendants' equipment.
30	Voucher in payment for defendants' Rex fittings sold to Equitable Auto Company.
31	Rex Duplex Fitting Company invoice to Equitable Auto Company.
34	Drawing of Lyman compressor used in Balluff transaction, the drawing being a copy of Plaintiff's Exhibit chart 11 identified in the Lyman decree.
36	Drawing illustrating defendants' Rex compressor and coupler outfit shown in conjunction with Alemite pin fitting.
37	Certified copy of Gullborg patent 1,307,734.
38	Certified copy of disclaimer of claim 12 of Gullborg patent 1,307,734.
39	File wrapper and contents of Gullborg patent 1,307,733.
40	File wrapper and contents of Gullborg patent 1,307,734.
41	Circular of Rex Duplex Fitting Co., illustrating and describing defendants' Rex compressor and coupler outfit.

42 Rex Duplex Fitting Sales Co. circular descriptive of defendants' Rex compressor and coupler outfit.

[fol. 196]

45 Drawing of Alemite C-600 compressor and coupler outfit shown in conjunction with defendants' Rex fitting.

Defendants' Exhibits

B Drawing of defendants' Rex fitting and non-suction effect coupler.

C Drawing of coupler of Gullborg patent 1,307,734.

D Copy of French Seng patent No. 468,869.

Exhibits to be transmitted as physical, and not to be printed.

Plaintiff's Exhibits

No.	Description
1	Articles of incorporation of The Bassick Manufacturing Company.
2	Certificate of change of name to Alemite Manufacturing Corporation.
3	Certificate of change of name to Alemite Corporation.
4	Assortment of Alemite pin fittings.
5	Alemite C-600 compressor, hose and coupler.
6	Alemite gat gun compressor, hose and coupler.
8	Old-fashioned grease cup.
9	Old-fashioned oil cups.
10	Old-fashioned oil can.
11	Aluminum Model of Alemite pin fitting.
12	Aluminum Model of Alemite suction-effect coupler.
16	Defendants' Rex compressor and non-suction effect coupler.

[fol. 197]

17	Assortment of defendants' Rex fittings.
20	One Rex fitting identified by Walkow.
22	Defendants' Rex fittings purchased by Balluff from Defendants' Chicago representative, Larson.
23	Lyman compressor identified by Balluff.
25	Defendants' Rex fittings purchased by Nelson Cornell from defendants' Chicago representative, Larson.
27	Defendants' Rex fittings purchased by Ulrich.
35	Cut-open specimen of defendants' Rex fitting.
43	Alemite push type fitting, drive-in type.
44	Alemite Zerk fitting with ball valve.
46	Alemite Zerk compressor.

Defendants' Exhibit

A Model of defendants' Rex fitting and non-suction effect coupler.

It is further stipulated and agreed that exhibits of either party may be retained in the custody of counsel, to be produced at the hearing on the appeal.

Clarke & Doolittle, James Roy Van Kirk, Attorneys for Defendants-Appellants. Williams, Bradbury, McCaleb & Hinkle, Attorneys for Plaintiff-Appellee.

Approved this 17th day of May, 1934.

F. P. Schoonmaker, United States District Judge.

[fol. 198] Clerk's Certificate to foregoing transcript omitted in printing.

[fol. 199] Minute entry of argument and submission, Oct. 9, 1934, omitted in printing.

[fol. 200] In United States Circuit Court of Appeals for the Third Circuit

October Term, 1934

No. 5463

G. S. Rogers, Doing Business as Rex Duplex Fitting Company, and R. W. Dusenberry, Defendants-Appellants,

v.

Alemite Corporation, Plaintiff-Appellee

Appeal from the District Court of the United States for the Western District of Pennsylvania

Before Buffington, Woolley and Thompson, Circuit Judges

Opinion—Filed December 18, 1934

Per Curiam:

In this case infringement, by the defendants, of certain claims of patent No. 1,307,734, granted to Gullborg, was

charged. On final hearing, the court held the patent valid and infringed.

The mechanism of the patent involved is described at length in 52 Fed. (2d) 36, and reference thereto saves needless repetition. The questions involved in the pres- [fol. 201] ent case were discussed by the court below in its opinion, and as no new principle of patent law is involved, and we find no error in that court's view, we limit ourselves to affirming the case on the opinion of the trial judge.

A true copy—Teste:

—— ——, Clerk of the United States Circuit Court of Appeals for the Third Circuit.

[fol. 202] IN UNITED STATES CIRCUIT COURT OF APPEALS FOR THE THIRD CIRCUIT, OCTOBER TERM, 1934

No. 5463

G. S. ROGERS, Doing Business as Rex Duplex Fitting Company, and R. W. DUSENBERRY, Appellants,

vs.

ALEMITE CORPORATION, Appellee

Appeal from the District Court of the United States for the Western District of Pennsylvania

JUDGMENT—Filed Dec. 18, 1934

This cause came on to be heard on the transcript of record from the District Court of the United States for the Western District of Pennsylvania, and was argued by counsel.

On consideration whereof, it is now here ordered, adjudged, and decreed by this Court that the decree of the said District Court in this cause be, and the same is hereby affirmed, with costs.

Philadelphia, December 18, 1934.

Per Curiam: Buffington, Circuit Judge.

[File endorsement omitted.]

[fol. 203] Petition for rehearing and brief in support thereof, covering 25 pages, omitted from this print. It was denied and nothing more by order of Jan. 25, 1935.

[fol. 204] In United States Circuit Court of Appeals for the Third Circuit

[Title omitted]

Order Denying Petition for Rehearing—Filed Jan. 25, 1935

And now, to wit, January 25, 1935, after due consideration, the petition for rehearing in the above-entitled case is hereby denied.

Philadelphia, January 25, 1935.

Per Curiam: Buffington, Circuit Judge.

[File endorsement omitted.]

[fol. 205] Clerk's Certificate to foregoing transcript omitted in printing.

[fol. 206] Supreme Court of the United States

Order Allowing Certiorari—Filed May 20, 1935

The petition herein for a writ of certiorari to the United States Circuit Court of Appeals for the Third Circuit is granted, and the case is assigned for argument immediately following No. 872, Bassick Mfg. Co. vs. Hollingshead Co.

And it is further ordered that the duly certified copy of the transcript of the proceedings below which accompanied the petition shall be treated as though filed in response to such writ.

The Chief Justice took no part in the consideration or decision of this application.

[fol. 207] IN SUPREME COURT OF THE UNITED STATES

STIPULATION TO DISPENSE WITH PRINTING OF PLAINTIFF'S EXHIBIT 13—Filed June 13, 1935

It is hereby stipulated by and between counsel for petitioner and respondent that Plaintiff's Exhibit 13 shall not be reprinted as part of the record but shall be retained merely as a physical exhibit with the right reserved to respondent to file or to hand up duplicate copies of this exhibit to the Court.

Respectfully submitted, Leonard L. Kalish, Attorney for Defendant-Petitioner.

May 29th, 1935, Philadelphia, Pa.

Lynn A. Williams, Attorney for Plaintiff-Respondent.

May 31, 1935, Chicago, Illinois.

[fols. 207½ & 208] [File endorsement omitted.]

[fol. 209] PLAINTIFF'S EXHIBIT NO. 14-A

Rex Duplex Fitting Company

Fulton Building, Pittsburgh, Penna.

April 14, 1932.

The following is a schedule of the Special State Distributor's Price, which we are pleased to quote you:

Rex Duplex High Pressure Hand Gun

Gun complete with hose, each	$4.30
Gun only less hose, each	2.45
Gun only with coupler, each	1.85
Hose only less coupler, each	1.40
Coupler only, each	.75

Rex Duplex Fittings

⅛ Straight	$25.00 M
⅛ 90°	50.00 M
⅛ 45°	60.00 M
⅛ 2" Extra Long	60.00 M
⅛ x ⅕ Brass Bushing	40.00 M

(Here follow photolithographs of Plaintiff's Exhibits 14-b and 14-c, side-folios 210 and 211)

Plaintiff's Exhibit No. 14-b.

140A

Plfs Ex #14-b 11/2/33 HCT

REX DUPLEX FITTING SALES CO.

FULTON BUILDING PITTSBURGH, PA.

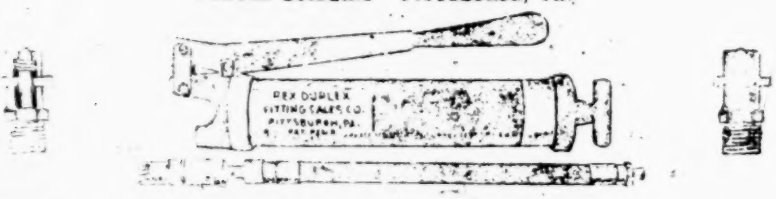

Gentlemen:

REX DUPLEX FITTING IS A SUPERIOR PRODUCT

The improved automatic spring action in the Rex Fitting insures a perfect seal up to 7,000 Lb. Pressure. This is accomplished by supporting the full circle of the spring on a brass bushing, which eliminates all rocking or wedging against the side walls of the tube and will consistently hold a given pressure. The enclosed literature describes the Rex High Pressure Hand Gun. In the attached bag you will find the Rex Lug Type Fitting for your testing.

THE REX DUPLEX FITTING IS A LEGITIMATE PRODUCT

The question of the possibility of patent infringement has received our very careful attention. The Rex Duplex Fitting was designed with full knowledge of the patent litigation on pressure grease fittings, and with the express purpose of avoiding infringement on all patents. We are advised by legal council that we do not infringe, therefore, we undertake to indemnify all dealers handling the Rex Duplex Fitting against any liability whatsoever for patent infringement. You can, therefore, purchase these fittings entirely without concern as to the possibility of any litigation for we are prepared financially and legally to defend any suit if instigated by anyone attempting to restrain the use of the Rex Duplex Fitting.

The following prices, speak for themselves:

FITTINGS		HAND GUNS	
1/4" St. Fitting	.06 ea.	Hand Gun comp.	$1[illegible] ea.
90° Angle	.12 "	" " less hose	[illegible] "
45° "	.14 "	Hose only with coupler	[illegible] "
2" Extra Long St.	.15 "	" " less "	[illegible] "
1/[illegible]-1/4" Brass Hex Bushing..	.10 "	Coupler only	1.75 "

Rex 10,000 Lb. High Pressure Hose can be supplied in any standard length.

Terms: 2% - Net Cash on Delivery - F. O. B., Pittsburgh, Pa.

We furnish Rex Fittings in the none pin, as well as the Lug Types.

On a trial order for any of above, money paid will be cheerfully refunded upon receipt of merchandise.

May we have the pleasure of serving you?

Very truly yours,

REX DUPLEX FITTING SALES COMPANY

RWD/ab

R. W. Dusenberry

Plaintiff's Exhibit No. 14-c.

Plfs Ex #14-C 4/2/33

REX DUPLEX FITTING SALES CO.

FULTON BUILDING - PITTSBURGH, PA.

Gentlemen:

The attached literature describes the line of Rex Duplex Fittings and High Pressure Grease Hand Guns, also copies of letters to the trade for your reading and files.

Following is the Price List covering Rex Duplex Products:

HIGH PRESSURE HAND GUN

		TRADE	JOBBER
Gun complete with hose	Each	$10.50	$ 6.30
Gun only less hose	"	6.10	3.65
Hose only with coupler	"	4.40	2.65
Hose less coupler	"	3.40	2.05
Coupler only	"	1.75	1.10

Rex 10,000 Lb. High Pressure Hose can be supplied in any standard length.

REX FITTINGS

1/8" St -	60.00 per M.	35.00 per M.
1/8 90° Deg.	120.00	60.00
1/8 45° "	140.00	70.00
1/8 2" St. Ex. Long	150.00	75.00
1/8 ½" Brass Hex	100.00	50.00

29
30
31
32

[fol. 212] PLAINTIFF'S EXHIBIT No. 14-D

This is a copy of a circular letter of assurance which we are mailing to State Distributors, Jobbers, Dealers and Salesmen.

GENTLEMEN:

Relative to the legality of patents pending on the Rex Duplex Products, you are advised that our attorneys have carefully investigated all questions of the possible infringement and assure us that we are not infringing. We, therefore, guarantee to protect you against any liability whatever for patent infringement.

We maintain a legal staff of attorneys for the express purpose of protecting our legal rights, and for your protection as well, on any action of annoyance instigated by anyone attempting to restrain the use of Rex Duplex Products.

In the event you are annoyed or your campaign retarded, wire us immediately, and we shall instruct our attorneys to take prompt action for your protection.

Very truly yours, Rex Duplex Fitting Company, per G. S. Rogers. Rex Duplex Fitting Sales Company, R. W. Dusenberry. RWD/eb.

This discount sheet mailed to all jobbers throughout the United States.

(A) Apr. 29, 1932.

[fol. 213] PLAINTIFF'S EXHIBIT No. 14-E

Rex Duplex Fitting Company,

Fulton Building, Pittsburgh, Penna.

April 5, 1932.

Cowan & Co., 421 Main Street, Louisville, Ky.

GENTLEMEN:

Enclosed is a sample of our Rex Duplex Lug Type Fitting. On the attached sheet, you will find full information, relative to prices and illustrations of the Rex Duplex Fitting and Rex Duplex High Pressure Hand Gun.

We are at this time sending out 393 of the Kentucky Fleet Owners our circular letters, which we are enclosing, herewith, likewise this sheet along with jobbers prices will reach 30 jobbers and accessory dealers throughout the State of Kentucky.

We are anxious to make a connection with some reliable house or person, who would be interested in the State distribution of our products. Look over the enclosed set-up, and let us hear from you.

Very truly yours, Rex Duplex Fitting Sales Company, R. W. Dusenberry. RWD/eb.

(Here follows photolithograph of Plaintiff's Exhibit No. 14-f, side folio 214)

214

Plaintiff's Exhibit No. 14-J.

REX DUPLEX FITTING SALES CO.

FULTON BUILDING - PITTSBURGH, PA.

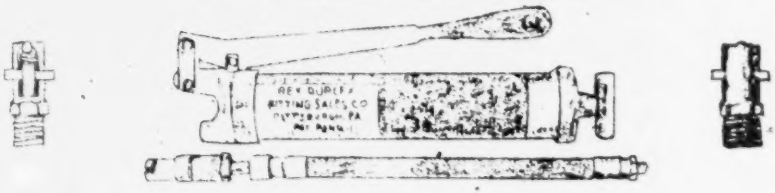

Gentlemen:

The attached literature describes the line of Rex Dupler Fittings and High Pressure Grease Hand Guns, also copies of letters to the trade for your reading and files.

Following is the Price List covering Rex Duplex Products:

HIGH PRESSURE HAND GUN

		TRADE	JOBBER
Gun complete with hose	Each	$10.50	$ 6.30
Gun only less hose	"	6.10	3.65
Hose only with coupler	"	4.40	2.65
Hose less coupler	"	3.40	2.05
Coupler only	"	1.75	1.10

Rex 10,000 Lb. High Pressure Hose can be supplied in any standard length.

REX FITTINGS

1/8" St -	60.00 per M.	[illegible] per M.
1/8 90° Deg. -	120.00	60.00 " "
1/8 45° "	140.00	70.00 " "
1/8 2" St. Ex. Long	150.00	75.00 " "
1/8 ¼" Brass Nip	[illegible]	[illegible] " "

READ REVERSE SIDE FOR IMPORTANT INFORMATION

[fol. 215] PLAINTIFF'S EXHIBIT No. 14-G

Rex Duplex Fitting Company

Fulton Building, Pittsburgh, Penna.

The following is a schedule of the State distributor's price, which we are pleased to quote you:

Rex Duplex High Pressure Hand Gun

Gun complete with hose, each	$4.30
Gun only, less hose, each	2.45
Gun only with coupler, each	1.85
Hose only less coupler, each	1.40
Coupler only, each	.75

Rex Duplex Fittings

⅛ Straight	$22.00 M
⅛ 90°	47.00 M
⅛ 45°	50.00 M
⅛ 2″ Extra long	40.00 M
⅛ x ¼ Brass Hex Bushing	30.00 M

[fol. 216] PLAINTIFF'S EXHIBIT No. 14-H

Rex Duplex Fitting Sales Company

Fulton Building, Pittsburgh, Penna.

July 19, 1932.

Strawbridge & Clothier, Philadelphia, Pa.

Attention—Manager Automotive Division

GENTLEMEN:

In the attached bag you will find a complete sample line of Rex Duplex High Pressure Lug-type Fittings.

Rex Duplex Lug Fittings are a legitimate product.

The following schedule of prices which we are pleased to quote you will permit you to merchandise the line at a price which will average about 50% under the standard list and reflect a long margin of profit to you:

1/8" Standard Straights	$2.20 per C
90° Angles	4.70 " "
45° "	5.00 " "
1/8" x 1½" Long Straights	4.00 " "
1/8" x 1/4" Bushings	3.00 " "

Terms: 2%—10, n/30—F. O. B. Pittsburgh, Pa.

Anticipating the pleasure of serving you, and awaiting your reply, we remain

Very truly yours, Rex Duplex Fitting Sales Company, R. W. Dusenberry. RWD:FD.

[fol. 217] PLAINTIFF'S EXHIBIT No. 14-1

Rex Duplex Fitting Company,

Fulton Building, Pittsburgh, Penna.

April 23, 1932.

DEAR SIR:

Through our representative in New York, Mr. Ralph W. Gould, your name has come to our attention as a possible distributor on the Rex Duplex line. Therefore, we are sending you under separate cover a set-up of circular letters and letters to the jobbing trade, also letter of assurance, which will familiarize you with our line.

We have been very successful in getting representatives throughout the East and Middle West, and are very anxious to locate someone in the Northwest, who could handle the Rex Line as a Sales Representative or Distributor. Please read this circular matter carefully, note the position we are taking, and the discounts and prices offered the trade, and if interested, let us hear from you.

Yours very truly, Rex Duplex Fitting Sales Company, C. H. Emery. CHE/eb.

(Here follow photolithographs of Plaintiff's Exhibits No. 18, side folios 218 and 219)

Plaintiff's Exhibit No. 18.

Plfi Exh #18
11/2/33 [illegible]

REX DUPLEX FITTING SALES CO.
Price List

	OIL CO.	LARGE QUANTITY	MED. QUANTITY	LIST PRICE	
GUN COMPLETE	4.95	6.30	8.40	10.50	Price each
GUN ONLY	2.85	3.65	4.90	6.10	
HOSE COMPLETE	2.15	2.65	3.55	4.40	
HOSE ONLY	1.60	1.90	2.65	3.40	
COUPLER ONLY	.70	.90	1.35	1.75	
BAYONET TIP ONLY	.35	.45	.55	.60	
SEALING WASHER	.35	.45	.55	.60	Price per dz.
1/8" ST. FITTINGS	4.00	4.00	5.00	6.00	Price per 100
90° " "	8.00	8.00	10.00	12.00	
45° " "	9.30	9.30	11.65	14.00	
1/8" x 1½" LONG ST.	10.00	10.00	12.50	15.00	
1/8 to ¼ BUSHINGS	3.00	3.00	4.50	6.00	

TERMS: Net cash on delivery to small unrated accounts.
To large well rated accounts, the salesman may accept orders for direct shipment on open account.
Terms: 2% - 10 days - 30 Net, in which case the company will invoice the account direct, and on receipt of payment, will credit the salesman with the differential between the net amount collected and the salesman's net cost.

Sheet 2
Plffs Ex 18

TYPES OF PROSPECTS TO CONTACT

Group No. 1 - LARGE FLEET OWNERS

This group buy in large quantities and repeats consistently. They are found listed under the headings of bakers, laundries, bottling companies, sand and gravel companies, hayling and moving, transfer companies, department stores, etc.

Group No. 2 - TRANSPORTATION COMPANIES

Street railways, bus companies, taxi companies, etc

Group No. 3 - INDUSTRIAL

Large manufacturing plants, mines, publishing companies, etc.

Group No. 4 - MUNICIPAL

City street departments, county and state highway departments, etc.

Group No. 5 - LUBRICATING COMPANIES

Service stations, garages, local distributors of lubricants.

* * * * *

219
Plaintiff's Exhibit No. 18.
14415

[fol. 220] PLAINTIFF'S EXHIBIT No. 19

Copy for Mr. Kidd.

July 22, 1932.

Mr. C. Hahn, 202 City Court House, Pittsburgh, Pa.

DEAR SIR:

Want to thank you for the courtesy shown to our representative, Mr. R. H. Kidd, in his interview with you today. Following is a confirmation of prices quoted:

⅛" St. Fittings	4.25 per C
90° Angle "	.08 each
45° " "	.09 "
⅛ x 1½ "	.09½ "
⅛ x ¼" Brass Bush.	.07 "
Hand Gun complete	6.00 ea.
" " less hose	3.75 "
Hose only with coupler	2.50 "
" " less "	1.90 "
Coupler only	1.00 "

Rex 10,000 lb. High Pressure Hose can be supplied in any standard length.

Terms: 2%-10, n/30—F. O. B. Pgh.

Assuring you that it will be a pleasure to serve you, we remain

Yours truly, Rex Duplex Fittings Sales Co., R. W. Dusenberry. RWD:FD.

Plaintiff's Exhibit No. 21.

UNITED STATES DISTRICT COURT

ALEMITE CORPORATION vs. G. S. ROGERS et al. | EQUITY NO. 2677

PLAINTIFF'S EXHIBIT 21

Order No. 95 — May 16 1932
M Wades Service
Ship to Forbes & Sixth ave
At _____ When _____
How Ship _____ Salesman RHK
Terms: _____ Buyer _____

50	1/8 Straight fittings	3.	00
	Less 1/3 off cash 10 days	2	00
	a/c 77		
	Delivered		
	Initial order Special discount		
	Paid		
	Rex Duplex Fitting Sales Co 902 Fulton Bldg		
	Robert H Kidd		

Plaintiff's Exhibit No. 24.

Plfi Ex # 24
11/2/33 HCT

TELEPHONE CALUMET 4553

CHICAGO AUTOMOTIVE SURPLUS CO.

2312 Cottage Grove Avenue

CHICAGO, ILL.

9/17/3

15 Green Cap
2 ad sel 75
Paid CL

EXHIBIT C - EDWIN J. BALLUFF AFFIDAVIT

Plaintiff's Exhibit No. 26.

Plf. Ex # 26
11/2/33 HCT

TELEPHONE CALUMET 4553

CHICAGO AUTOMOTIVE SURPLUS CO.

2312 Cottage Grove Avenue

CHICAGO, ILL.

Connect Mfg Co.

7/16/32

30 Gear Cups 6" Ea. 50" 1.50

Plaintiff's Exhibit No. 28.

Plfs' Ex # 28 4/2/33 HC

July 11 1932

Received from Mr M K Ulrich

Four 00/100 Dollars

$ 4.00 R H Kidd

225

Plaintiff's Exhibit No. 29.

Pltf. 4 F

1
2
3

...STING

PITTSBURGH, PA., JUNE 9, 1933

East Liberty Post No. 5 Gazette

Department of Pennsylvania, American Legion

"Western Pennsylvania's Largest Post"

No. 10

...(two

...20.16 each

...be assigned ...

...with applications re-

...this office. It is sug-

...that your reservations be

...ade as early as possible.

...o Your Physician"

...escription work. Registered Pharmacists, ac-

...Doctors orders using only fresh pharmaceutical

...cy delivery at all times.

...K ROOM SUPPLIES AND TOILETRIES

ERSKINE PHARMACY

CLYDE R. ERSKINE

...SOUTH HIGHLAND MONTROSE 2910

HIGH PRESSURE GREASE GUN

For greasing all Lubricating Systems, Rolling Mills, Cranes, Automobiles.

Equipped with 10,000 lbs. pressure hose, with coupler complete, automatic self feeding.

Rex Duplex High Pressure Gun

Sole Agent, Robert H. Kidd, Member Post 5

1817 Duffield St. Hiland 4013-J

...wi...
and...
credit...

Ben ...
8; Si. W...
5; H. St...
Watson 3; M...
Spear, Jr. 2; ...
Geo. M. Hamilto...

The following ... ...ton,
brought in one new ... Com.
... J. Audet, P. B. ... Post, Col.
Conner, O. Conte, H. ... off and Past
Edward Crump, Jr., Ro... ...ard Crump.
Sam D. Foster, H. W. ... recent illness, our
Robert H. Kidd, I. D. ... ...ade Judge Robert Ewing,
George G. O'Bri... Ru... first time was unable to be
Porter, O. D. Sch... ...red ...ent at the services.

East Liber...
East

Plf's Ex #30
11/2/33 HCT

THIS VOUCHER IS ISSUED IN FULL PAYMENT OF ACCOUNT AS STATED WITHIN, AND THE PAYEE ACCEPTS IT AS SUCH BY THE ENDORSEMENT BELOW.

NO OTHER RECEIPT IS REQUIRED

ENDORSEMENTS

The Union Trust Co. PITTSBURGH, PA. 8-72
The Union Trust Co. PITTSBURGH, PA. 8-72
JUN 1 1932

OP BAY DETACH

95 E

FARMERS DEPOSIT NATIONAL BANK 8-11

PITTSBURGH, PA.

DATE MAY 27 1932

$7.60

PAY EXACTLY 7 DOLLARS 60 CTS

TO THE ORDER OF Rex Duplex Fitting Company, Fulton Building, Pittsburgh, Pa.

EQUITABLE AUTO COMPANY

227

Plaintiff's Exhibit No. 30.

EQUITABLE AUTO COMPANY
435 SIXTH AVENUE, PITTSBURGH, PA.

Plfs Ex #30
11/2/33 HCT

MONTH May, 1932 AUDIT No. 95 E

To Rex Duplex Fitting Company,

DATE OF BILL	DESCRIPTION OF CLAIM	AMOUNT	TOTAL
May 19	For Grease Cups	8 00	
	- - Credit - -		
	By 5% discount	40	7 60
			7 60

I CERTIFY THAT THE ABOVE ACCOUNT IS CORRECT, AND THAT THE EXPENSE WAS INCURRED FOR THE BENEFIT OF THIS COMPANY.

APPROVED FOR PAYMENT

C. J. Mackell
CONTROLLER

EQUITABLE AUTO COMPANY

J. W. A. Kelin
AUDITOR OF DISBURSEMENTS

FORM A10-2480

Plaintiff's Exhibit No. 31.

Pefs Ex # 31

PITTSBURGH, PENNA. MAY 19, 193 3.

Sold To

EQUITABLE AUTO COMPANY,
435 Sixth Avenue,
Pittsburgh, Penna.

11286

Attn.: General Purchasing Agent.

IN ACCOUNT WITH

REX DUPLEX FITTING COMPANY
FULTON BUILDING
PITTSBURGH • PENNSYLVANIA

Your Order No. Q 36889
Reqn. No. Bryson-7044

SHIPPED VIA Delivered by Mr. Kidd. TERMS 5% - 10 Days. F.O.B.

Ul 6 21 121

100 1/8" Rex Grease Cups elbow type 12¢ ea. less 33 1/3% = $8.00

5% .40
7.60

FOR CHARGE
SEE OTHER SIDE

T. J. B.

DISCOUNT EXPIRES 5 May 1932
ORDER NO. Q 36889
INTENDED USE
CHARGE ACCT. NO.
BUDGET ITEM
RECEIVING CARD NO. 10633
INVOICE
M. & B. LEXINGTON AVE.
ORDERED BY
FOB DESTINATION
PT. OF SHIPMENT
FRT. ALLOWED
APPROVED

7.60

MAY 20 1932 PURCHASING DEPT. RECEIVED

MAY 23 1932 ACCOUNTANT

PITTSBURGH PENNSYLVANIA
FULTON BUILDING
REX DUPLEX FITTING COMPANY
IN ACCOUNT WITH
Your Order No. Q 36889
Reqn. No. Bryson-7044
Attn.: General Purchasing Agent.
Sold To
EQUITABLE AUTO COMPANY,
PITTSBURGH PENNA. MAY 19, 193 3.

229

Plaintiff's Exhibit No. 34.

Plf's Ex #34
11/2/33 HCT

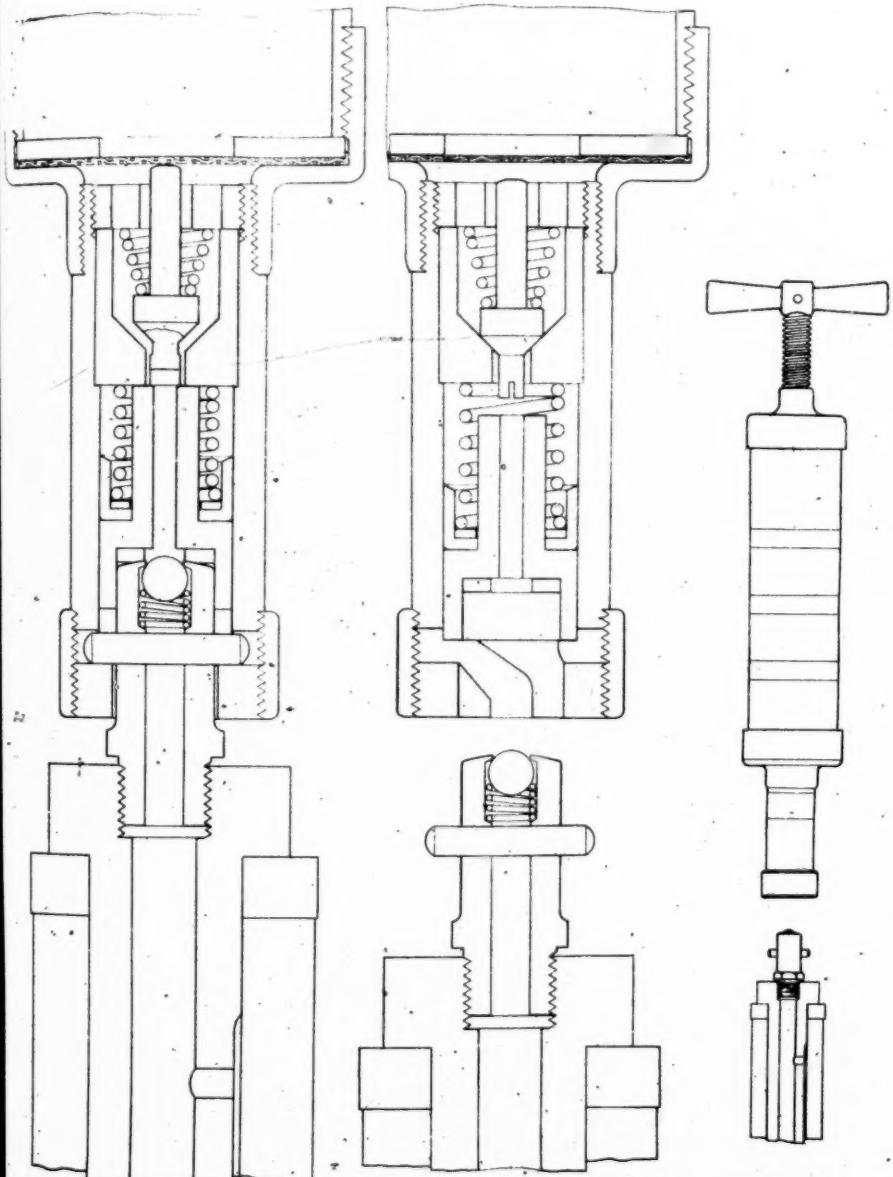

BASSICK vs. LYMAN, EQUITY NO. 1000; BASSICK vs. PEERLESS, EQUITY NO. 1275
(Copy of Plaintiff's Exhibit Chart 11)

Illustrates defendant's fitting and first type of coupling. Held to have infringed.

230

Plaintiff's Exhibit No. 36.

Pltf's Ex # 36

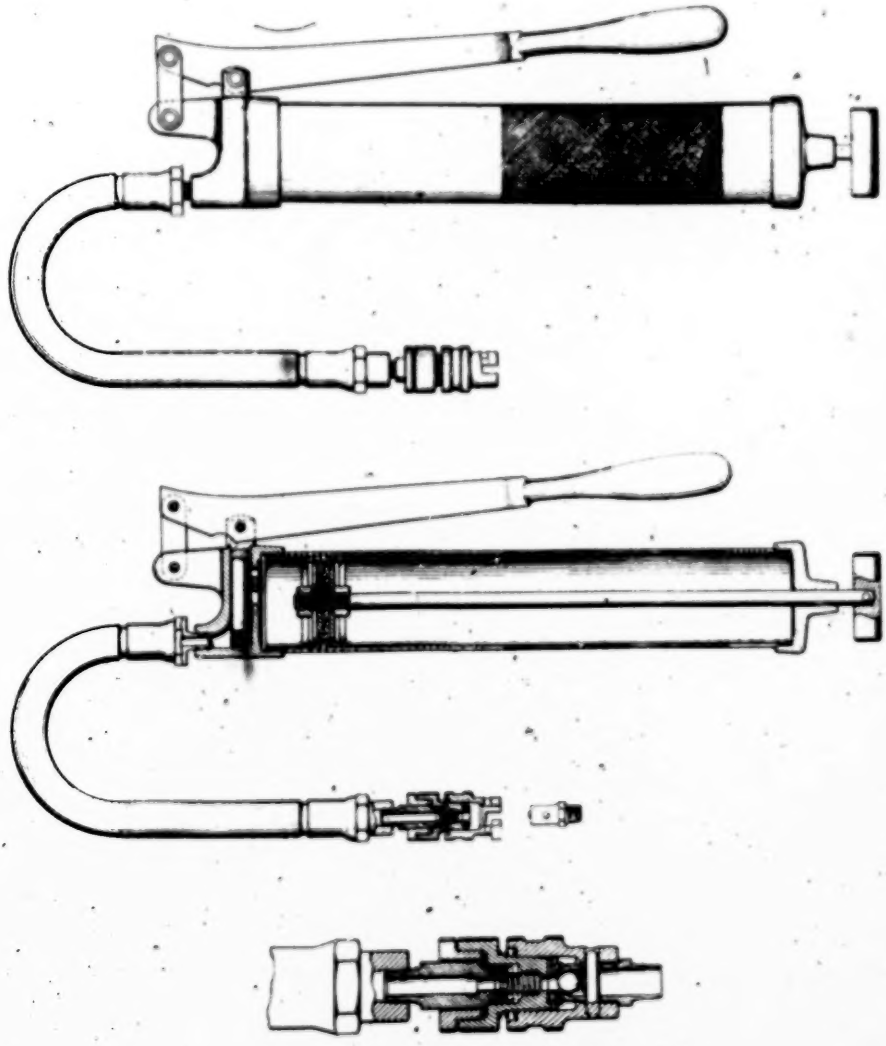

156

231

Plaintiff's Exhibit No. 7.

A. V. GULLBORG.

LUBRICATING MEANS.

APPLICATION FILED DEC. 21, 1917.

1,307,734.

Patented June 24, 1919.

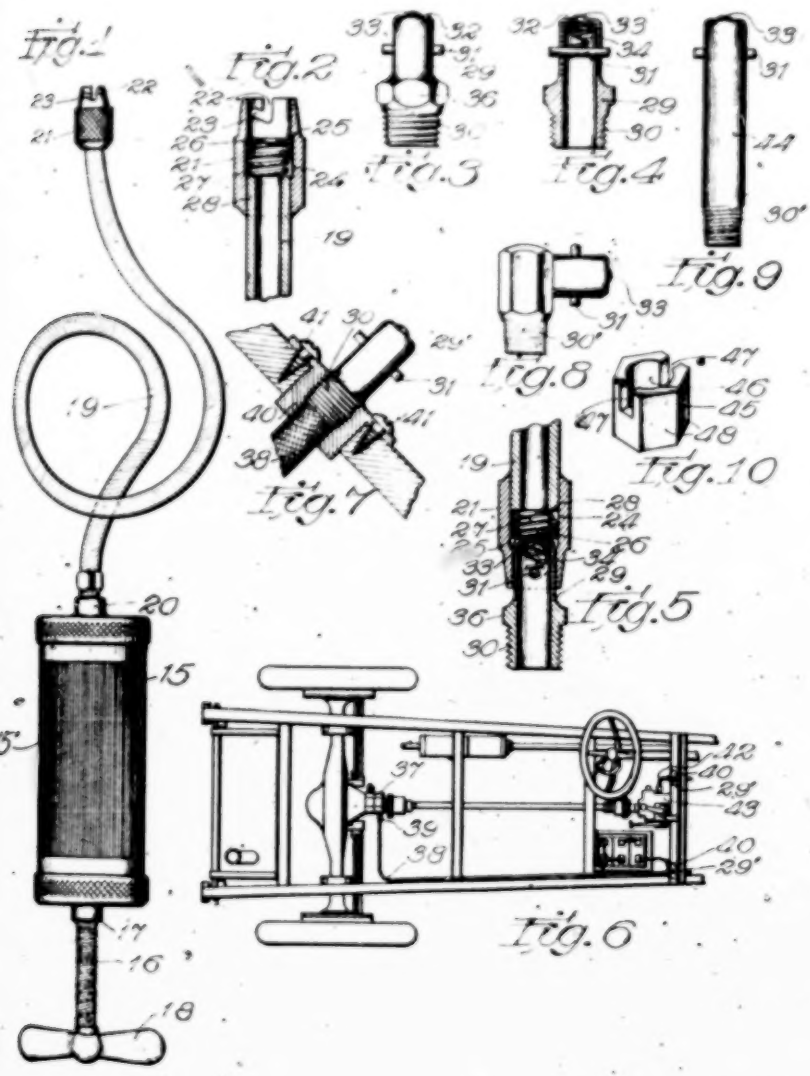

Witnesses:
Andrew Winterrowd
Earl A. Price

Inventor
Arthur V. Gullborg
Williams, Bradbury & Lee
Attys.

156

Plaintiff's Exhibit No. 37.

UNITED STATES PATENT OFFICE.

ARTHUR V. GULLBORG, OF CHICAGO, ILLINOIS.

LUBRICATING MEANS.

1,307,734. Specification of Letters Patent. Patented June 24, 1919.

Application filed December 21, 1918. Serial No. 267,858.

To all whom it may concern:

Be it known that I, ARTHUR V. GULLBORG, a citizen of the United States, residing at Chicago, in the county of COOK and State of Illinois, have invented a certain new and useful Improvement in Lubricating Means, of which the following is a full, clear, concise, and exact description, reference being had to the accompanying drawing, forming a part of this specification.

My invention relates to lubricating means, and is especially concerned with means for supplying suitable lubricants to parts of machines or apparatus requiring lubrication where these parts are difficult to gain access to, and is further concerned with the provision of apparatus for supplying lubricants under pressure to movable parts, the said means comprising a grease pump or gun provided with means for detachably connecting it with the various parts to be lubricated.

The objects of my invention are:

1st. To provide novel means for supplying a lubricant under pressure to the parts of an apparatus to be lubricated, the said means comprising a grease pump or gun and means for detachably connecting the discharge of said grease pump or gun with the part to be lubricated.

2nd. To provide novel coupling means for connecting the grease gun with the parts to be lubricated, the said coupling means being so constructed that when the coupling members are uncoupled or disconnected from each other there will be no excess lubricant on the outer ends of the coupling members.

3d. To provide novel means for effectively sealing the joint between the coupling members so that the lubricant may be forced between the parts to be lubricated under a very heavy pressure.

4th. To provide novel means whereby lubricant may be supplied to parts to which it is difficult to gain access.

5th. To provide novel coupling members to be permanently secured to the parts to be lubricated.

6th. To provide novel means to assist in attaching and detaching a tubular coupling member to a part to be lubricated.

Further objects will appear as the description progresses, reference being had to the accompanying drawing in which,

Figure 1 is a side elevation showing my improved grease gun;

Fig. 2 is a longitudinal section through the coupling member thereof;

Fig. 3 is a side elevation of one type of coupling member adapted to be secured to the part to be provided with lubricant and co-acting with the coupling member of my grease gun for connecting the discharge outlet of the grease gun with the part to be lubricated;

Fig. 4 is a longitudinal section of the structure shown in Fig. 3;

Fig. 5 is a longitudinal section through the coupling members shown in Figs. 2 and 4; but taken on a plane at right angles to the section plane of Figs. 2 and 4 showing the two coupling members united;

Fig. 6 is a more or less conventional plan view of an automobile with the body thereof removed showing the novel means which I provide for conveying lubricant to parts ordinarily difficult to gain access to, the front portion of the automobile chassis being broken away;

Fig. 7 is a sectional view showing the means for securing my coupling members to the ends of the conduits for conveying lubricant to the parts difficult of access;

Fig. 8 is a side elevation of a modified form of coupling member;

Fig. 9 is a side elevation of a still further modification of my coupling member; and

Fig. 10 is a perspective view of the means which I employ for rotating the coupling members shown in Fig. 9 in either direction to attach it to or detach it from the part to be provided with a lubricant.

Similar characters of reference refer to similar parts throughout the several views.

Referring to the drawings, the reference character 15 indicates the barrel of my improved grease gun or pump which is provided in a wellknown manner with a plunger, not shown, which is reciprocated in the barrel 15 by means of a screwthreaded piston rod 16 which co-acts with a screwthreaded nut 17, the piston 16 being provided with a handle 18. The barrel 15 is provided with ribs or corrugations 15' to insure a firm grip of the hand thereon. A flexible conduit 19, of any suitable and wellknown construction, has one end secured to the discharge outlet 20 of my pump and the other end is provided with a hollow coupling member, indicated in general by the reference character 21. The free end of this coupling member, as shown in Fig. 2, is provided with a

bayonet slot 22, the transverse portion 23 of which is inclined from the inner end of the longitudinal portion of the slot toward the outer end of the coupling member for a purpose which will be referred to later on. The bore of the coupling member is enlarged at 24 to provide an annular shoulder 25. A perforated cup leather or sealing disk 26 is slidably mounted in the annular portion 24 of the bore of the coupling and is urged against the shoulder 25 by means of a coiled spring 27, one end of which abuts against the cup leather or sealing disk 26 and the other end of which abuts against the adjacent end 28 of the conduit 19. This end of the conduit may be soldered or secured in any convenient manner to the coupling member.

Referring to Figs. 3 and 4, the reference character 29 indicates as a whole a second coupling member which co-acts with the coupling member just described. This coupling member is in general tubular in form and is provided at one end with screwthreads 30 for securing it to the part to be lubricated. A pin 31 extends through and projects from the opposite sides of the other end of the tubular member. This end of the tubular member is flanged inwardly, as indicated at 32, to form a valve seat with which the hollow capsule shaped valve 33 co-acts. A spring 34 interposed between the pin 31 and the hollow valve 33 urges the latter against the valve seat 32. My purpose in making the valve 33 hollow is, first, to provide sufficient room for the spring 34 without materially increasing the length of the coupling member, and, second, to provide means which will tend to prevent the spring 34 from buckling or flexing longitudinally when the valve 33 is pushed inwardly to admit the lubricant. My invention contemplates the provision of facets 36 to receive the jaws of a wrench whereby the coupling member may be attached to or detached from the parts to be lubricated.

In Fig. 5 I have shown the coupling members 21 and 29 coupled together. In this position it will be noted that the spring 27 is partially compressed and that the sealing disk 26 is displaced from the annular shoulder 25 by the end of the coupling member 29. When the piston of the gun pump is actuated to force lubricant through the conduit 19 under pressure this pressure will cause the sealing disk 26 to seal the joint between the two coupling members and thus prevent any escape of lubricant over the sides of the coupling member 29. On account of the fact that the transverse portion 23 of the bayonet slot in the coupling member 21 is inclined toward the open end of this coupling member it is necessary in order to detach this coupling member from the coupling member 29 to move it toward the coupling member 29. This movement causes an additional small quantity of lubricant to be forced into the coupling member 29. When the coupling member 21 is then turned to permit the pin 31 to slide in the longitudinal portion of the slot 22 the sealing disk 26 is moved toward the end of the coupling member 29 under the pressure of the spring 34. This causes the sealing disk 26 to move toward the outer end of the coupling member 21 and thereby produces a slight vacuum which causes any grease which might otherwise remain on the outer end of the coupling member 29 or the outer side of the valve 33 to be sucked back behind the sealing disk 26, and thereby prevents any excess of lubricant from remaining on the end of the coupling member 29 or on the outside of the valve.

From the above description it will be seen that I have provided means for conveying a lubricant to the part or parts to be lubricated which not only prevents the loss of lubricant, even though the lubricant may be forced between the bearing surfaces under very high pressure, but also prevents the lubricant from remaining upon exposed portions of the coupling members after these have been uncoupled, and subsequently lost. This feature is of importance where, as I will describe later on, the coupling members are located at readily accessible points and where, in case the parts being lubricated form a part of a motor vehicle or other similar structure, the clothes of the operator are likely to come in contact with these coupling members.

Referring to Fig. 6 in which I have disclosed a portion of a motor vehicle with the body thereof removed, the reference character 37 indicates a bearing in the differential casing which is supplied with lubricant by a conduit 38 connected therewith by a suitable hollow coupling 39. The other end of the conduit 38 is brought forwardly in the vehicle and is secured to either the dash or the instrument board, as may be found convenient, by means of a floor socket 40, shown in detail in Fig. 7, which is secured in place by means of the screws 41 and is provided with an internal screwthread for receiving the screwthreaded portion 30 of a coupling member 29'. This coupling member 29' is similar to that shown in Figs. 3 and 4, except that it is not provided with the facets 36 for receiving the jaws of a wrench. The forward end of the conduit 38 may be soldered or otherwise secured in the socket 40. The reference character 42 indicates another conduit for conducting oil from the coupling member 29' to the transmission housing 43.

While I have illustrated means for conducting lubricant to but two portions of this automobile vehicle it is to be under-

stood that conduits similar to 38 and 42 may be used for conducting lubricant to any portion of the vehicle which it is desired to lubricate. Furthermore, this feature of my invention is not to be limited to means for lubricating motor vehicles, but is capable of being used for lubricating any apparatus whether the parts to be lubricated are or are not difficult of access.

In Fig. 8 I have shown a modified form of a coupling member to be secured to a part to be lubricated. This coupling member is L shaped and one end thereof is provided with screwthreads 30′ and the other end thereof being provided with a pin 31 and a spring-pressed valve or closure 33 similar to that described in connection with Figs. 3 and 4. The purpose of this coupling member is to provide means for connecting the coupling member 21 with a part to be lubricated which would otherwise be difficult of access if provided with a straight coupling member such as that shown in Figs. 3 and 4.

In Fig. 9 I have disclosed a still further modification of my coupling member wherein it is formed from a tubular member 44 of substantially constant diameter which is not provided with means for co-acting with a wrench to attach or detach it to the part to be lubricated. In order to thus attach or detach this member I provide the means illustrated in Fig. 10. This means comprises a sleeve-like member 45 having a bore 46 therein for receiving the tubular member 44 and slots 47 for receiving the ends of the pin 31 of the tubular member 44. The member 45 is provided with facets 48 for co-acting with a wrench or other tool for rotating this sleeve.

While I have described the preferred embodiments of my invention it is to be understood that it is capable of other adaptations and modifications within the scope of the appended claims.

Having thus described my invention what I claim as new and desire to secure by Letters Patent of the United States is:

1. The combination with a hollow coupling member having a pin projecting from one side thereof and a spring-pressed closure, of a pump having a flexible conduit connected with the outlet thereof, a second hollow coupling member secured to the other end of said conduit for receiving the closed end of said first named coupling member and provided with a bayonet slot for receiving said pin, the transverse portion of said slot being inclined from the longitudinal portion thereof toward the outer end of the coupling member, the bore of said coupling member being enlarged to provide a shoulder, a perforated sealing disk slidably mounted in the enlarged portion of said bore, and a spring confined between the ends of said conduit and said disk for urging said disk against said first named coupling member.

2. The combination with a hollow coupling member having a pin projecting from one side thereof and a spring-pressed closure, of a pump, a discharge conduit having one end secured to the outlet of said pump, a second hollow coupling member for receiving the closed end of said first named coupling member secured to the other end of said conduit and provided with a bayonet slot adapted to co-act with said pin, a perforated sealing disk mounted to reciprocate in the bore of said coupling member, means for yieldingly urging said sealing disk against the closed end of said first named coupling member, and means for limiting the movement of said sealing disk in the direction of said second coupling member.

3. The combination with a hollow coupling member having a spring-pressed closure, of a pump, a discharge conduit having one end secured to the outlet of said pump, a second hollow coupling member for receiving the closed end of said first named coupling member secured to the other end of said conduit, a perforated sealing disk mounted to reciprocate in the bore of said coupling member, means for yieldingly urging said sealing disk against the closed end of said first named coupling member, and means for limiting the movement of said sealing disk toward said second coupling member.

4. The combination with a hollow coupling member having a spring-pressed closure, of a pump, a discharge conduit having one end secured to the outlet of said pump, a second hollow coupling member for receiving the closed end of said first named coupling member secured to the other end of said conduit, a perforated sealing disk mounted to reciprocate in the bore of said coupling member, and means for yieldingly urging said sealing disk against the closed end of said first named coupling member.

5. The combination with a pump having a flexible conduit connected with the outlet thereof, of a hollow coupling member secured to the other end of said conduit and provided with a bayonet slot, the transverse portion of said slot being inclined from the longitudinal portion thereof toward the outer end of the coupling member, the bore of said coupling member being enlarged to provide a shoulder, a perforated sealing disk slidably mounted in the enlarged portion of said bore, and a spring confined between the ends of said conduit and said disk for urging said disk toward said shoulder.

6. The combination with a pump having a discharge outlet, of a coupling member connected with said discharge outlet and provided with a bayonet slot, the transverse

portion of said slot being inclined from the inner end of the longitudinal portion thereof toward the outer end of said coupling member, a perforated sealing disk slidably mounted in the bore of said coupling member, and means for yieldingly urging said sealing disk toward the outer end of said coupling member, and means for limiting the movement of said sealing disk toward the outer end.

7. The combination with means for supplying lubricant under pressure, said means comprising a discharge outlet, of a coupling member connected with said discharge outlet, a perforated cup leather slidably mounted in said coupling member, and means for yieldingly urging said cup leather toward the outer end of said coupling member.

8. The combination with an apparatus having a part to be lubricated, of a conduit for conducting lubricant to said part, a coupling member secured to the end of said conduit and provided with a spring-pressed valve closure, means for supplying lubricant to said conduit comprising a receptacle provided with a discharge outlet, a second coupling member connected with said discharge outlet, means for detachably uniting said coupling members, and means for sealing the joint between said coupling member and for removing excess lubricant from the adjacent ends thereof when said coupling members are uncoupled.

9. The combination with an apparatus having a part to be lubricated, of a conduit for conducting lubricant to said part, a coupling member secured to the end of said conduit and provided with means for supplying lubricant to said conduit comprising a receptacle provided with a discharge outlet, a second coupling member connected with said discharge outlet, means for detachably uniting said coupling members, and a pliable gasket for sealing the joint between said coupling members.

10. The combination with an apparatus having a part to be lubricated, of a conduit for conducting lubricant to said part, a coupling member secured to the end of said conduit and provided with means for supplying lubricant to said conduit comprising a receptacle provided with a discharge outlet, a second coupling member connected with said discharge outlet, and means for detachably uniting said coupling members and for removing excess lubricant from the adjacent ends thereof when said coupling members are uncoupled.

11. The combination with a bearing provided with a member for receiving lubricant, of means for supplying lubricant thereto comprising a hollow member, means for supplying lubricant to said hollow member under pressure, means for detachably connecting said members, and means for sealing said connection comprising a gasket positioned between said members and held against one of said members by the pressure of the lubricant.

12. The combination with a bearing provided with a member for receiving lubricant, of means for supplying lubricant thereto comprising a hollow member, means for supplying lubricant to said hollow member under pressure, means for detachably connecting said members, means for sealing said connection comprising a gasket positioned between said members and held against one of said members by the pressure of the lubricant, and a spring for initially positioning said gasket against said member.

13. The combination with a receptacle for receiving lubricant, of means for supplying lubricant to said receptacle comprising a hollow member, means for forcing lubricant into said hollow member under pressure, and means for connecting said hollow member to said receptacle in fluid-tight relation comprising a pliable member positioned in said hollow member and having one face for contacting with said receptacle, the other face of said pliable member being subjected to the pressure of the lubricant in said hollow member.

14. The combination with a grease cup comprising a tubular member having one end flanged inwardly to provide a closure seat, a closure, a pin extending through said tubular member and from both sides thereof, and a spring confined between said pin and closure, and tending to hold said closure on its seat, of a grease pump having a discharge conduit, and means co-acting with the ends of said pin for detachably connecting the discharge end of said conduit with said grease pump.

15. The combination with a grease cup comprising a tubular member having a closure seat, a closure, a pin extending through said tubular member and from both sides thereof, and a spring confined between said pin and closure, and tending to hold said closure on its seat, of a grease pump having a discharge conduit, and means co-acting with the ends of said pin for detachably connecting the discharge end of said conduit with said grease cup.

16. The combination with a grease gun having a discharge conduit, of means for connecting said conduit with a bearing comprising a tubular member, co-acting means on said conduit and said tubular member for detachably connecting said conduit and tubular members, and a flexible member for sealing the joint between said conduit and said tubular member, said flexible member having an aperture for the passage of lu-

bricant from said conduit to said tubular member, a portion of one face of said flexible member being positioned so as to be subjected to any pressure created in said conduit to force it against said tubular member.

17. The combination with means for supplying lubricant under pressure comprising a discharge member, of means for connecting said discharge member to a bearing comprising a tubular member, and means for detachably connecting said members in sealed relation comprising means subjected to the pressure created in said members, the said means being positioned between said members and held against one of said members by said pressure.

18. The combination with a member for receiving lubricant, of means for supplying lubricant thereto under pressure comprising a tubular member, means for detachably connecting said tubular member to said lubricant-receiving member in sealed relation comprising a flexible member provided with an aperture for the passage of lubricant, one face of said member being subjected to the pressure of the lubricant.

In witness whereof, I hereunto subscribe my name this 14th day of December, 1918.

ARTHUR V. GULLBORG.

Witnesses:

JOHN E. CARLSON,

JOHN L. STEFFEN.

Ex. #38

Plaintiff's Exhibit No. 38.

DISCLAIMER.

1,307,734.—*Arthur V. Gullborg*, Chicago, Ill. LUBRICATING MEANS. Patent dated June 24, 1919. Disclaimer filed August 29, 1927, by the assignee by mesne assignments, *The Bassick Manufacturing Company.*

Hereby enters this disclaimer to that part of the claims in said specification which is in the following words, to wit:

"12. The combination with a bearing provided with a member for receiving lubricant, of means for supplying lubricant thereto comprising a hollow member, means for supplying lubricant to said hollow member under pressure, means for detachably connecting said members, means for sealing said connection comprising a gasket positioned between said members and held against one of said members by the pressure of the lubricant, and a spring for initially positioning said gasket against said member."

[*Official Gazette September 13, 1927.*]

232 Plfs. Ex #39
Plaintiff's Exhibit No. 39. 194

390

DEPARTMENT OF COMMERCE
UNITED STATES PATENT OFFICE

To all persons to whom these presents shall come, Greeting:

THIS IS TO CERTIFY that the annexed is a true copy from the records of this office of the File Wrapper and Contents, with exception of Notices of Suit; and Drawing, in the matter of the

Letters Patent of

Arthur V. Gullberg,

Number 1,307,755, Granted June 24, 1919,

for

Improvement in Lubricating Apparatus.

IN TESTIMONY WHEREOF I have hereunto set my hand and caused the seal of the Patent Office to be affixed, at the City of Washington, this eighteenth day of May, in the year of our Lord one thousand nine hundred and thirty-one and of the Independence of the United States of America the one hundred and fifty-fifth.

ATTEST:

Chief of Division.

Thomas E. Robertson
Commissioner of Patents.

163

233

Plaintiff's Exhibit No. 39.

Geo. H. S.

SUMMER Series of 1915.

216586 1 3 (TA'R'S BOOK) 67

Div. 43 PATENT No. 307733

Arthur V. Gullborg PAT. JUNE 24 1919

Chicago

Illinois.

Invention Lubricating Apparatus.

	ORIGINAL	RENEWED
Petition	Feb. 11, 1918	191
Affidavit	" " 1918	191
Specification	" " 1918	191
Drawing	" " 1918	191
Photo Copy	191	191
First Fee Cash	$15. Feb. 11, 1918	191
" " Cert.	191	191
Appl. filed complete	Feb 11, 1918	191

Examined and Passed for Issue 191 — 191

A. W. Giles Exr. Div. 12 — Exr. Div.

Notice of Allowance Cancel 19, 1919 — 191

Final Fee Cash $20 May 28, 1919 — 191

Cert. 191 JUN 24 1919 191

Patented 191

Attorney Williams, Bradbury & See. Monadnock Block. Chicago, Ill.

Associate Attorney

No. of Claims Allowed 2 Print Claims 1 2 in O. G. (Cl. 184-1)

Title as Allowed Lubricating Apparatus

6

234

Plaintiff's Exhibit No. 39.

[illegible] HARRISON.

[illegible] WILLIAMS
[illegible] BRADBURY
[illegible] SEE
[illegible] MCCALLS
[illegible] BRACKE
[illegible] PIERCE

15-

WILL[illegible]
ATTOR[illegible]
PATENT[illegible]
[illegible] CAUSER
[illegible] BLOCK
CASO

February 9, 1918.

Hon. Commissioner of Patents,
Washington, D. C.

Sir:

Enclosed herewith please find the patent application papers of Arthur V. Gullborg covering an improvement in Lubricating Apparatus, Case 2, also Lynn A. Williams' check for $15.00 to cover the filing fee thereon.

Respectfully,

Williams Bradbury & Sec

Enclosures.

3.

216536-1

235

Plaintiff's Exhibit No. 39.

5659

216,586-1

TO THE COMMISSIONER OF PATENTS:

Your petitioner, ARTHUR V. GULLBORG, a citizen of the United States, and resident of Chicago, in the County of Cook, and State of Illinois, whose post-office address is C/o Alemite Metals Company, 341 West Chicago Avenue, Chicago, Illinois, prays that letters patent may be granted to him for the improvement in LUBRICATING APPARATUS (Case 3) set forth in the annexed specification, and he hereby appoints WILLIAMS, BRADBURY & SEE (Reg. No. 10,473) a co-partnership composed of Lynn A. Williams, Clifford C. Bradbury, and Robert M. See, of 1315 Monadnock Block, Chicago, Illinois, his attorneys, with full power of revocation and substitution to prosecute this application, to make alterations and amendments therein, to receive the patent, and to transact all business in the Patent Office connected therewith.

Signed at Chicago, in the County of Cook and State of Illinois, this 14 day of Feb. 1918.

Arthur V Gullborg

216576-2

236
. Plaintiff's Exhibit No. 39.

5660

TO ALL WHOM IT MAY CONCERN:

Be it known that I, ARTHUR V. GULLBORG, a citizen of the United States, residing at Chicago, in the County of Cook and State of Illinois, have invented a certain new and useful improvement in LUBRICATING APPARATUS, of which the following is a full, clear, concise, and exact description, reference being had to the accompanying drawings, forming a part of this specification.

This invention relates to lubricating apparatus and is particularly concerned with the provision of means for supplying lubricating grease to bearings which are more or less inaccessible. One object of my invention is to provide means of the character described comprising a novel grease pump which cooperates with a grease cup of novel construction to entirely fill the grease cup without wasting any of the lubricating grease. Another object of my invention is to provide a grease pump having a flexible discharge conduit. A still further object of my invention is to provide a grease pump having a flexible discharge conduit provided with means for interchangeably locking either end thereof to said grease pump or to the grease cups which are being filled by the grease pump, and a still further object is to provide a flexible discharge conduit for my improved grease pump one end of said conduit being provided with a straight coupling and the other end thereof being provided with an L-shaped coupling, whereby, by the use of either one or the other of these couplings it is possible to

1-1- 1165-86-3

Plaintiff's Exhibit No. 39.

5661

obtain access to grease cups in comparatively inaccessible places. Other objects, adaptabilities, and capabilities will appear as the description progresses, reference being had to the accompanying drawings, in which

Figure 1 illustrates my improved grease pump supplying grease to one of my novel grease cups, the grease pump being shown partially in longitudinal section. In this view my improved grease cup is shown applied to a steering knuckle of an automobile;

Figure 2 is a longitudinal section through my improved grease cup; and

Figure 3 is a longitudinal section through one of the coupling members.

Referring to the drawings, the reference character 5 indicates the barrel of my improved grease pump, one end of which is closed by a head 6, which may be soldered or otherwise secured to the end of the barrel. The opposite end of the barrel is closed by the head 8, which has an internally threaded flange 9 for receiving the external threads 10 on the end of the barrel. The head 6 is provided with a central boss 11, which is provided with a screwthreaded bore for receiving the screwthreaded piston rod 12. The rod 12 is provided with a handle 13 for rotating the same. The inner end of the rod 12 has a piston mounted thereon which comprises the spaced disks 14 and 15 between which is confined the cup leather 16, the two disks 14 and 15 and the cup leather being rotatably mounted upon the reduced end 17 of the piston rod and retained in place by means of a washer 18, through which the end of the piston rod extends and is riveted over to secure the washer thereto.

Plaintiff's Exhibit No. 39.

5662

The head 8 is provided with a central boss 19 having a reduced portion 20, shown in dotted lines in Figure 1, forming a shoulder 21 and a discharge opening 22 formed therethrough. A pin 23 extends through the reduced portion 20 and from both sides thereof. The discharge conduit 24 is formed from a piece of flexible duct, preferably comprising an outer spiral metallic rib 25. There are numerous flexible ducts in commercial use which may be employed for this part of my invention, and further description thereof appears to be unnecessary. At one end of the duct 24 I provide an orthic L-shaped coupling 26 having bayonet slots 27, one of which is not shown, which co-act with the opposite ends of the pin 23 to secure the coupling to the pump. The opposite end of the conduit 24 is provided with a straight coupling 28 having bayonet slots 29, one of which is not shown, for co-acting with the opposite ends of the pin 30 of my novel grease cup.

From the above description it will be clear that either coupling member can be connected with either the pump or with the grease cup. By using the orthic L-shaped coupling for connecting with the grease cup it is sometimes possible to gain access to a grease cup which would not otherwise be accessible.

My novel grease cup comprises a tubular member 31 having the screwthreads 32 at one end thereof for securing them to a bearing, and the other end thereof being flanged inwardly as shown at 33, for the purpose of providing a seat for the ball closure 34. This closure is urged against its seat by means of a compression spring 35, which is confined between the pin 30 and the closure 34. The central portion of my grease cup is hexagonal in cross section, as indicated at 36, thereby providing means for receiving the

 216596-57

jaws of a wrench to screw the cup into place.

In Figure 3 the reference character 37 indicates a gasket made of felt or other suitable material for sealing the connection between the coupling and the grease cup. From this construction it will be seen that when the coupling member is secured to the grease cup by means of the bayonet connection, there will be no chance for the grease to escape between these two members when the piston rod 12 is rotated to force the piston inwardly, and thereby force the grease into the grease cup. This is an improved feature of my invention for the reason that in prior grease pumps with which I am acquainted, no means has been provided for locking the discharge end of the nozzle to the grease cup, and consequently, if more grease than is necessary to fill the grease cup is forced through the nozzle, the excess quantity of grease merely overflows the edge of the grease cup and is wasted. With my improved construction there is no chance for grease being wasted in this manner. Furthermore, it is possible completely to fill the grease cup with grease, which is a result impossible of being obtained with the old type of grease pumps for the reason that by the use of these pumps more or less air always became entrapped in the grease.

Another advantage of my construction lies in the fact that after the coupling member of my grease pump has been connected with the grease cup, the pump can be operated without paying any attention to the location of the grease cup.

While I have disclosed the preferred embodiment of my invention, it is to be understood that it is not limited to the details of the structure described, but is capable of other adaptations and modifications within the scope of the appended claims, some of which are broad enough to include

220
Plaintiff's Exhibit No. 30.

566

constructions in which the grease cups are entirely dispensed with and means are provided for detachably connecting the grease pump with members having apertures formed therein for conveying grease to the parts to be lubricated.

Having thus described my invention, what I claim as new and desire to secure by Letters Patent of the United States is:

8 Bottom

2,576-7

241

Plaintiff's Exhibit No. 39.

5665

1. The combination with a grease pump having a discharge opening and a flexible discharge conduit provided at one end with a straight coupling and at the other end with an L-shaped coupling, of a grease cup and means on said grease pump and grease cup for co-acting with said couplings to interchangeably connect either end of said conduit with said pump and cup respectively.

2. The combination with a grease pump having a discharge opening and a discharge conduit provided at one end with a straight coupling and at the other end with an L-shaped coupling, of a grease cup and means on said grease pump and grease cup for co-acting with said couplings to interchangeably connect either end of said conduit with said pump and cup respectively.

3. The combination with a grease pump having a discharge opening and a flexible discharge conduit provided at each end with a coupling, of a grease cup, and means on said grease pump and grease cup for co-acting with said couplings to interchangeably connect either end of said conduit with said pump and cup respectively.

4. The combination with a grease pump having a discharge opening and a discharge conduit provided at each end with a coupling, of a grease cup, and means on said grease pump and grease cup for co-acting with said couplings to interchangeably connect either end of said conduit with said pump and cup respectively.

9 214576-8

242

Plaintiff's Exhibit No. 59.

5666

5. The combination with a grease pump having a discharge opening and a discharge conduit therefor, of a grease cup and co-acting means on said conduit and grease cup for detachably locking the discharge end of said conduit to said grease cup.

6. The combination with a grease pump having a discharge opening and a flexible discharge conduit therefor, of a grease cup and co-acting means on said conduit and grease cup for detachably locking the discharge end of said conduit to said grease cup.

7. The combination with a grease pump and a grease cup of means for detachably connecting said pump to said cup and for conveying grease from said pump to said cup.

8. A grease cup in combination with a grease pump having a discharge orifice, and means for detachably connecting said grease pump to said grease cup to discharge thereinto.

9. The combination with a grease cup comprising a tubular member having one end flanged inwardly to provide a closure seat, a closure, a pin extending through said tubular member and from both sides thereof, and a spring confined between said pin and closure, and tending to hold said closure on its seat, of a grease pump having a discharge conduit, and means co-acting with the ends of said pin for detachably connecting the discharge end of said conduit with said grease pump.

2165-84-9

5667

~~10.~~ The combination with a grease cup comprising a tubular member having a closure seat, a closure, a pin extending through said tubular member and from both sides thereof, and a spring confined between said pin and closure, and tending to hold said closure on its seat, of a grease pump having a discharge conduit, and means co-acting with the ends of said pin for detachably connecting the discharge end of said conduit with said grease cup.

~~11.~~ The combination with a grease cup comprising a tubular member having a pin extending through said tubular member and from both sides thereof, of a grease pump having a discharge conduit, and means co-acting with the ends of said pin for detachably connecting the discharge end of said conduit with said grease cup.

~~12.~~ The combination with a grease cup having a pin extending from one side thereof, a grease pump having a discharge conduit provided with means for co-acting with said pin to detachably connect the discharge end of said conduit with said grease cup.

~~13.~~ A grease cup comprising a tubular member having screwthreads at one end and having the other end flanged inwardly to provide a closure seat, a closure, a pin extending through said tubular member and on both sides thereof, and a spring confined between said pin and closure and tending to hold said closure on said seat.

~~14.~~ A grease cup comprising a tubular member

216586-10

5668

having one end flanged inwardly to provide a closure seat, a closure, a pin extending through said tubular member and on both sides thereof, and a spring confined between said pin and closure and tending to hold said closure on said seat.

~~18.~~ A grease cup comprising a tubular member having one end flanged inwardly to provide a closure seat, a closure, a pin extending inwardly and outwardly from one wall of said tubular member, and a spring confined between the inner end of said pin and said closure to hold said closure on its seat.

~~18.~~ A grease cup having means at one end for permanently securing it to a bearing, and a coupling means at the other end.

~~17.~~ A grease cup having means at one end for securing it to a bearing and a pin at the other end extending through and projecting from one wall thereof.

~~16.~~ A grease pump having a discharge opening in combination with a discharge conduit having a straight coupling member at one end and an L-shaped coupling member at the other end, said couplings and pump being provided with co-acting means for connecting either of said couplings with said pump

19. A grease pump having a discharge openin- and a flexible discharge conduit connected therewith.

30. The combination with a plurality of grease cups of a grease pump, and means for successively detachably connecting the discharge of said pump with each of said grease cups comprising co-acting bayonet coupling members on said pump and cups.

31. The combination with a plurality of grease cups of a grease pump, and means for successively detachably connecting the discharge of said pump with each of said grease cups.

32. The combination with a plurality of members provided with grease receiving apertures, of a grease pump, and means for successively detachably connecting the discharge of said pump with said apertures comprising co-acting bayonet coupling members.

33. The combination with a plurality of members provided with grease receiving apertures, of a grease pump, and means for successively detachably connecting the discharge of said pump with said apertures.

34. The combination with a member provided with a grease receiving aperture, of a grease pump, and means for detachably connecting the discharge of said pump with said aperture.

35. A grease pump having a discharge opening, means for detachably connecting said discharge opening with a grease receiving aperture comprising a bayonet coupling member.

246

Plaintiff's Exhibit No. 39.

5670

26. A grease pump having a discharge opening, and means for detachably connecting said discharge opening with a grease receiving aperture.

27. A grease pump having a bayonet coupling member provided with a discharge passage for said pump.

38. A grease cup having means at one end for permanently securing it to a bearing, and a bayonet coupling means at the other end.

14

216 5-86-13

Plaintiff's Exhibit No. 39.

IN WITNESS WHEREOF, I hereunto subscribe my name this 1st day of February, 1918.

Arthur V. Gullborg

WITNESSES:

[illegible]

Oscar Rehmer

OATH

State of Illinois }
County of Cook } ss:

ARTHUR V. GULLBORG, the above-named petitioner, being duly sworn, deposes and says that he is a citizen of the United States, and resident of Chicago, in the County of Cook and State of Illinois, and that he verily believes himself to be the original, first and sole inventor of the improvement in LUBRICATING APPARATUS (Case 3) described and claimed in the annexed specification; that he does not know and does not believe that the same was ever known or used before his invention or discovery thereof, or patented or described in any printed publication in the United States of America, or any foreign country before his invention or discovery thereof; or more than two years prior to this application; or in public use or on sale in the United States for more than two years prior to this application; that said invention has not been patented in any country foreign to the United States on an application filed by him or his legal representatives or assigns, more than twelve months prior to this application; and that no application for patent on said improvement has been filed by him or his representatives or assigns in any country foreign to the United States.

Arthur V. Gullborg

Subscribed and sworn to before me this 1st day of February, 1918.

F. E. Johnson
Notary Public

15

216586-14

248

Plaintiff's Exhibit No. 39.

Div. 45 Room 879

Paper No. 2

B.W.

DEPARTMENT OF THE INTERIOR

UNITED STATES PATENT OFFICE

WASHINGTON March 20, 1918.

Williams, Bradbury & See,

Monadnock Block,

Chicago, Ill.

PATENT OFFICE MAR 20 1918 MAILED

Please find below a communication from the EXAMINER in charge of the application of

Arthur V. Gullborg, Ser. No. 216,586, filed Feb. 11, 1918,

for Lubricating Apparatus.

James T. Newton

Commissioner of Patents.

Claims 1 to 8 inclusive are substantially met in

Winkley, 1,201,414, Oct. 27, 1915;(184-1)

and are rejected.

Claims 9 and 10 are rejected on

Rampassi, 714,329, Nov. 25, 1902;(184-89)

also on

Richardson, 8,251, July 29, 1851;(184-89),

(which shows the closure and spring are old)in connection with Winkley above cited and

Reimund, 863,878, Aug. 20, 1907;(184-88)

Reimund shows the bayonet point is old, also the pin extending from the tubular member.

Claims 11 and 12 are rejected on the same reference cited against claim 1.

Claims 13 and 14 are rejected on Winkley in connection with Reimund, et al, both cited above.

Claim 15 is rejected on Rampassi or Richardson both previously cited in connection with

Marks, et al, 249,194, Nov. 8, 1881;(184-89).

16 216586 18

Plaintiff's Exhibit No. 39.

Ser. No. 216,586----2.

Claims 16, 18, 19, 20, 21, 23, 24 and 26 are rejected on Winkley previously cited.

Claim 17 is rejected on Reimund, et al, in connection with Marks, both cited above.

Claims 22, 25, 27 and 28 are rejected on Winkley in connection with Reimund, et al, previously cited.

L. S. Underwood

Examiner.

11

CC

Marks

216,596-16

250
Plaintiff's Exhibit No. 39.

#3

a

U. S. P. Office
JUN 25 1918
DIVISION

UNITED STATES PATENT OFFICE

Applicant - Arthur V. Gullberg — Case 2.
Invention - Lubricating Apparatus — Room 575 Str. 46
Serial No. - 216,586 — Filed February 11, 1918.

1315 Monadnock Block,
Chicago, Ill., June 22, 1918.

Hon. Commissioner of Patents,
Washington, D. C.

Sir:

In the matter of the above entitled application, and in response to Official Action, dated March 20, 1918, applicant amends as follows:

Cancel claims 5 to 8 inclusive, claims 16, 19, 21, 23, 24, 26, and 28, and renumber the remaining claims as 1 to 17 inclusive.

NOTE:

The above amendments have been made in an endeavor to place this application in condition for allowance. The references cited by the Examiner have been carefully considered and certain claims cancelled in view thereof. It is thought, however, that the claims retained recite structures which are patentable over those disclosed by any of the references.

18

216586-17

251

Plaintiff's Exhibit No. 39.

Claims 1, 2, 3, and 4, which are rejected upon the patent to Winkley, all bring out more or less in detail the construction of the applicant's device which permits either end of the discharge conduit to be connected with either the pump or the grease cups. In the Winkley structure no corresponding construction is found. In practice the Winkley structure would be at a disadvantage for the reason that it would be impossible to reach many of the elements corresponding to the applicant's grease cup where these elements are located in many of the inaccessible positions upon motor vehicle structures. By the applicant's construction means are p[illegible] which access to the grease cups may be obtained from a plurality of different directions and by a plurality of different movements. No similar structure is found in Winkley and in view of the advantages of the applicant's structure it is believed that these claims should be allowed in the absence of any more pertinent art.

Claims 5 and 6, formerly claims 9 and 10, are rejected upon the patents to Rampazzi, Richardson, and Weimund. These claims are directed to the details of the structure of the applicant's grease cup and include broadly the grease pump. In the structure set forth by these claims the pin serves a double function, namely, it provides a support for one end of the spring which closes the closure of the grease cup, and also provides means whereby the discharge conduit of the grease cup may be detachably connected with the grease cup. None of the references discloses a similar combination, nor do they suggest such a combination. It is a fundamental proposition of patent law that a claim for a new combination can only be anticipated by a reference disclosing a substantially similar combination functioning in substantially the same manner to produce substantially the same result. None of the references cited against these claims rea-

. 19 216576-17

252

Plaintiff's Exhibit No. 39.

pond to this criterion, nor would this combination be suggested to a mechanic ordinarily skilled in this art or to anybody else by the references relied upon to anticipate these claims. Furthermore, it is not clear to counsel for applicant in what manner the different structures disclosed by these references could be combined to produce the structure set forth in these claims. In the event that the Examiner still insists upon the rejection he is respectfully requested to point out how these structures could be modified in view of each other to produce the structure recited in these claims.

Reconsideration of claims 7 and 8, formerly claims 11 and 12, is respectfully requested for the reasons recited above in connection with claims 1 to 4 inclusive.

The rejection of claims 9 and 10, formerly claims 13 and 14 upon Winkley in connection with Reimund is not understood. These claims do not include the grease pump and the situation of Winkley in connection therewith is not understood. While the patent to Reimund does disclose pins extending from opposite sides of the coupling member of the oil cup this patent does not disclose a spring pressed closure and consequently does not disclose a structure in which the pins co-act with this closure in the manner in which the pins co-act with the closure of the applicant's structure. These claims do set forth a combination not disclosed by any of the references cited by the Examiner and are, therefore, thought to be allowable.

Allowance of Claim 11, former claim 15, is respectfully requested. The patent to Marr, while disclosing a pin for supporting one end of the spring, the other end of which supports a closure for a lubricating device does not suggest the use of this same pin as a coupling member and since the patent to Reimund, discussed above, does not disclose a spring

20

-3-

Plaintiff's Exhibit No. 39.

pressed closure in which one end of the spring is supported by the pins of that structure it is believed that the possibility of uniting certain features of these two different structures to produce that claimed by the applicant becomes apparent only after the applicant's structure has suggested this combination. Neither of these references discloses the combination and this claim is, therefore, believed to be patentable.

Reconsideration of claim 12 is requested for the reasons recited in connection with claim 11.

Claim 18 is rejected upon the patent to Winkley, but Winkley does not disclose a discharge conduit having a straight coupling member at one end and an "L" shaped coupling member at the other end, either of which may be connected with the pump.

Claims/14, 15, 16, and 17 are believed to be patentable for the reason that they include the bayonet coupling means between the pump and the grease cup. This coupling means is superior to that disclosed by Winkley for the reason that it will permit access to grease cups located in positions which would be inaccessible with the connecting means disclosed by Winkley. With this means the only motion necessary for connecting the coupling member with the grease cup is one about the axis of the grease cup and does not require a movement in both directions transversely of the grease cup as does the structure disclosed by Winkley.

Allowance of this application as amended is respectfully requested.

21

ARTHUR M. CULLBERG,

By Williams, Bradbury & Ike

Attorneys.

-4- 216586-20

254

Plaintiff's Exhibit No. 39.

DIV. 45 Room 379
Address
"The Commissioner of Patents
Washington, D. C.,"
and not any official by name.

2-260

Paper No. 4
All communications respecting this application should give the serial number, date of filing, title of invention, and name of the applicant.

B:W

DEPARTMENT OF THE INTERIOR

UNITED STATES PATENT OFFICE

WASHINGTON July 22, 1918.

Williams, Bradbury & See,

Monadnock Block,

Chicago, Ill.

PATENT OFFICE
JUL 22 1918
MAILED

Please find below a communication from the **EXAMINER** *in charge of the application of*

Arthur V. Gullborg, Serial No. 216,586, filed Feb. 11, 1918, for Lubricating Apparatus.

James T. Newton
Commissioner of Patents

In response to amendments filed June 24, 1918.

Claims 1 to 4 inclusive are rejected on Winkley, of record, in connection with

DeGrey, 1,017,654, Feb. 20, 1912; (184-105)

It would not be considered invention to make both ends of the flexible tube of DeGrey the same.

Claims 7, 8, 9, 12, 13, 14 to 17 inclusive are rejected on the same references cited against claim 1. It would not be considered invention to have a pin extend through the coupling in DeGrey's device so as to form the joint.

Claims 5, 6 and 10 are, as at present advised, allowable.

Examiner.

216586-21

255

Plaintiff's Exhibit No. 39.

MAIL ROOM AUG 23 1918 PATENT OFFICE

Letter

U. S. Pat. AUG 27 1918 DIVISION 45

UNITED STATES PATENT OFFICE

Applicant - Arthur V. Gullborg — Case No. 2

Invention - Lubricating apparatus — Room 379 Div. 45

Serial No. 216,586 — Filed Feb. 11, 1918.

1315 Monadnock Block,

Chicago, Ill., Aug. 23, 1918.

Hon. Commissioner of Patents,

Washington, D. C.

Sir:

In the matter of the above entitled application, and in response to official action, Paper No. 4, dated July 22, 1918, applicant submits the following:-

NOTE:

The patent to DeGrey has been carefully considered, but counsel for applicant is unable to see wherein this patent discloses a structure which is relative in any sense to the claims under rejection. The patent to DeGrey discloses what is described as a safety connection for gas fixtures, and is merely a flexible conduit for connecting a wall fixture with a gas consuming device, the conduit being provided at each end with a coupling means including a bayonet joint. If this patent is merely cited to disclose a bayonet joint, its citation was unnecessary, as bayonet joints are known by the applicant to be old, even in connection with various sorts of conduits.

The citation of this patent for any other purpose is unwarranted for the reason that it is drawn from an entirely non-analogous art. The applicant's invention is concerned with a pressure means for delivering a lubricant to a bearing under high pressure, including means whereby the pump of

23 216586-22

256
Plaintiff's Exhibit No. 39.

his invention can be easily and quickly connected to and disconnected from a novel type of grease receptacle or couplingmember, the two couplings being of such a nature as to prevent the escape of grease, and of such construction as to provide means for supplying lubricants to inaccessible points in machinery.

The problems solved by the applicant and by DeGrey are entirely different. Anybody assuming to make means or apparatus of the type to which the applicant's invention relates would hardly expect to find this means in a class including a flexible conduit for connecting a wall fixture with a gas-consuming device. Furthermore, it is not believed likely that the examiner will contend that DeGrey would in any way suggest the applicant's structure or a structure having the functions of the applicant's structure. Furthermore, DeGrey's structure could not be used for the applicant's apparatus. Taking the coupling shown in Figure 3, if it should be attempted to use such a coupling member for the applicant's apparatus, grease would collect in the outer end of the coupling - that is, in that portion of the coupling whichextends beyond the sealing disc 37 - and upon uncoupling the two coupling members, it would run out and be a nuisance. To attach the DeGrey structure to the applicant's apparatus, it would require certain modifications and alteration which would not only destroy its identity, but would render it inoperative for the purpose for which it was designed. In this connection, attention is called to the decisions of the Supreme Court - Hobbs v. Beach, 180 U. S. 383, and Potts v. Creager, 155 U. S. 597, in which it was held that but very slight alterations in structure disclosed by one art were sufficient to sustain the validity of patents in structures designed for an entirely

non-analogous purpose. The same rule should be applied in this case, and the patent to DeGrey withdrawn as a reference.

Counsel for applicant is further unable to find in DeGrey any coupling member having a straight coupling at one end and an L-shaped coupling at the other end which can be interchangeably connected with two other couplings. The couplings disclosed by DeGrey cannot be interchangeably connected with either the wall or the consuming device.

While claims 15, 16 and 17 are directed somewhat broadly to the use of bayonet couplings for connecting the discharge conduit of the grease pump with the pump and the coupling member secured to the part to be lubricated, it is still believed that these claims present patentable subject matter, for the reason that this connection is particularly advantageous for the applicant's purpose, in that it permits the coupling members to be connected and disconnected with a minimum amount of movement, and can thus be used where the portions or parts to be lubricated are so inaccessible that coupling members of a different type could not be employed.

Allowance of this application is for the above reasons respectfully requested.

Respectfully,

ARTHUR V. GULLBORG,

By Williamson, Bradbury & Lee

Attorneys

25

216586-34

258

Plaintiff's Exhibit No. 39.

Div. 46 Room 778

Address only "The Commissioner of Patents, Washington, D. C.," and not any official by name.

2-260

Paper No. 6

All communications relating this application should give the serial number, date of filing, title of invention, and name of the applicant.

DEPARTMENT OF THE INTERIOR

UNITED STATES PATENT OFFICE

B-W

WASHINGTON Oct. 7, 1918.

Williams, Bradbury & See,

Monadnock Block,

Chicago, Ill.

Please find below a communication from the ***EXAMINER*** *in charge of the application of*

Arthur V. Gullborg, Serial No. 216,586, filed Feb. 11, 1918.

for Lubricating Apparatus.

James T. Newton

Commissioner of Patents

In response to communication filed August 24, 1918.

The action of July 22, 1918, is repeated.

Winkley of record shows a connection between a given gear and the bearing. To make this connection the same as applicant and duplicate on both ends would not be considered invention, as a connection like applicant's is shown as old in DeGrey of record.

Examiner.

216586-25

259

Plaintiff's Exhibit No. 39.

#1. 13

U. S.

UNITED STATES PATENT OFFICE

Applicant - Arthur V. Gullberg — Case 2

Invention - Lubricating Apparatus — Room 379 Div. 45

Serial No. 216,586 — Filed Feb. 11, 1918

1315 Monadnock Block,

Chicago, February 6, 1919

Hon. Commissioner of Patents,

Washington, D. C.

Sir:

Please amend by canceling claims 14 and 15, renumbering the remaining claims as 14 and 15, and adding the following claim:

16. The combination with a grease cup having a substantially cylindrical portion, of a grease pump having a coupling member provided with a substantially cylindrical bore adapted to receive said cylindrical portion of said grease cup, co-acting means on said grease cup and coupling member for detachably holding them together, and a gasket carried by said coupling member for sealing the joint between said grease cup and said coupling member.

REMARKS:

The above amendments have been made in an endeavor to place this application in condition for allowance.

During a recent oral interview with the examiner having charge of this application, the various advantages

27 216586 - 16

of the applicant's construction over that disclosed by Winkley were pointed out, as well as the differences between the applicant's structure and that of Winkley.

Winkley perceived the necessity for providing means for forming a tight joint between his grease cup and the nozzle of the grease gun, which would prevent the lubricant, even under high pressure, from escaping between these two members. While the means which he discloses for this purpose is operable, it is costly to manufacture and more or less inconvenient to manipulate, especially where the grease cups are located in close proximity to portions of the apparatus to which they are connected, this being due to the fact that it requires a movement transversely of the grease cup in two different directions in order to attach the nozzle to the grease cup. While Winkley's connecting means is operable and would function properly, it requires too much room for its manipulation.

The applicant, while not aware of the Winkley patent when he filed his application, nevertheless perceived the necessity for providing some sort of means for securing the discharge nozzle to the grease cup with a tight joint, which would be of such a nature as to permit these two members to be secured together by a minimum amount of movement of these members relatively to each other. At the same time he perceived that in order to make his device a commercial success, this means would necessarily have to be such that it could be cheaply manufactured and at the same time provide a perfect seal between the nozzle and the grease cup.

It would have been a comparatively simple matter for him to provide means which would perform this function, but, as is usual, the most obvious means for doing this

were the most complicated. As evidence of this fact, attention is called to the Winkley construction, which, counsel for applicant has been informed by Mr. Winkley, required the expenditure of a great amount of time and thought in its construction. Furthermore, Mr. Winkley is a skilled engineer and mechanic. All of these things clearly point to the fact that the applicant's construction or means for accomplishing results which he desired were not obvious. The examiner has been unable to cite any patents from the art to which the applicant's invention relates showing structures that in any way approximate that which the applicant has disclosed and which he is now claiming. In order to anticipate the claims, the examiner has found it necessary to combine the disclosures in two different patents, one of which - namely, the patent to Winkley - relates to the same art as the applicant's construction, and the other of which - namely, the patent to DeOrey - is drawn from an entirely different art. The construction shown by DeOrey not only relates to a different art, but was designed for an entirely different purpose from that for which the applicant's was designed, and could not be used for the applicant's purpose.

One of the principles of patent law most frequently enunciated by the various tribunals dealing with these laws is that a new combination of elements functioning in a novel manner to produce a useful result can be anticipated only by a similar combination functioning in a similar manner to produce this result or a similar result. It is believed that the citation of authorities to support this statement is unnecessary. The examiner, by combining the two references, has tacitly admitted that neither of

of them discloses the combination recited in the claims under rejection. The rejection is, therefore fundamentally weak.

The rejection is also weak because it relies upon a reference drawn from an entirely non-analogous art. The recent decisions of the various Federal courts apparently disclose an unwillingness on the part of these courts to destroy the protection upon a meritorious invention by relying upon patents or devices drawn from arts which are remote from that to which the patented devices relate. Some of these decisions reject patents or devices drawn from what appear to the casual observer to be quite similar or analogous arts.

In Rousso v. City Towel Supply Co., 242 F. 655, the court held that there was no analogy between a towel cabinet and a bill file, although the constructions in these two similar articles were very similar, and the functions of the two different structures were quite analogous.

In Wm. Thropp et al. v. Woven Tire Co., 226 F. 941, the court held that a machine for wrapping an annulus was not a proper anticipation of a machine for wrapping an automobile tire, although the constructions were very similar.

In Rembusch v. Bennethum, 214 F. 257, it was held that a screen for exhibiting moving pictures, consisting of a sheet of glass having its back silvered and its front upon which the pictures are thrown, ground or frosted, was not anticipated by the use in the sign art of mirrors having letters or designs etched or ground on their front.

In General Elec. Co. v. City of Dunkirk et al.,

211 F. 858, the court held that the use of tenons for securing cover strips to the buckets of a turbine was n anticipated by the prior use of a similar construction in propeller wheels and in vehicle wheels.

Similarly in Weber Elec. Co. v. Electric Fix Co., 212 F. 948, the court held that there was no anal between a cover for a paint can and a fixture for an electric light.

See also the decisions in

Benjamin Card Co. v. Rand, McNally & Co., 210 F. Imperial Brass Co. v. Nelson, 203 F. 484; Elec. Co. v. Westinghouse Mfg. Co., 171 F. 83; and Seeger Refrigerating Co. v. American Foundry Co., 171 F. 416.

In view of this almost universal disposition the part of courts to confine the alleged anticipating structures to the art to which the patentee's invention relates, or at least to those arts which are very clear analogous thereto, and in view of the fact that the cou are the final arbiters of the protection to which a pat is entitled, it is respectfully submitted that the Pate Office in examining patent applications should apply si ilar rules to determine the relevancy or non-relevancy of a patent or other alleged anticipating device. It i believed that if the applicant is accorded a similar co sideration, the patent to DeGrey will be withdrawn as a reference in this application, and that in the ab- sence of any more pertinent art relating to devices similar to that to which this application is directed, claims of this application will now be found allowable.

It is believed to be unnecessary to discuss the claims in detail, as most of the claims are limited to a construction involving a bayonet coupling member.

3\-8- 2/65-86-30

Plaintiff's Exhibit No. 39

If the patent to DeGrey is withdrawn as a reference and no corresponding anticipation is found in the lubricating art, the claims will undoubtedly be allowed.

A new claim has been added, which is directed to some of the details of the applicant's construction, including the gasket which the applicant uses for sealing the joint between the nozzle and the grease cup. No similar construction is found in either of the references, and this claim should also be allowed.

Allowance of this application as amended is respectfully requested.

Respectfully,

ARTHUR V. GULLBORG,

By Williams Bradbury & Lee
Attorneys.

37

216586-31

Plaintiff's Exhibit No. 39.

Serial No. 216,586 Room 879
Address only
"The Commissioner of Patents,
Washington, D. C.,"
and not any official by name.

Paper No. 8
All communications respecting the application should give the serial number, date of filing, title of invention, and name of the applicant.

DEPARTMENT OF THE INTERIOR
UNITED STATES PATENT OFFICE
WASHINGTON

B-W

March 10, 1919.

Williams, Bradbury & See,
Monadnock Block,
Chicago, Ill.

MAR 1919

Please find below a communication from the EXAMINER in charge of the application of Arthur V. Gullberg, Serial No. 216,586, filed Feb. 11, 1918, for Lubricating Apparatus.

James T. Newton
Commissioner of Patents

Amended Feb. 10, 1919.

Claims ~~4~~ and ~~6~~ Canceled are rejected on

MacClyment, 937,682, Oct. 19, 1909; (184-105).

This patent has a conduit which may be flexed and attached to the grease gun and receptacle by a screw joint coupling which is certainly interchangeable as the pipe has a screw joint at the end evidently the same size.

Considering claims ~~4~~ and 6 as covering merely an interchangeable pipe coupling joint, the patent to DeGrey, of record, is held to met these claims.

Claims 7, 8 and 12 are rejected on the patent to DeGrey and on Reimund, et al, of record. Merely the extension of the pin through the element is held not to be patentable.

Claims 14 and 15 are rejected on

Brown, 1,141,101, June 1, 1915; (184-89)

and on the German patent to

Bitter, 6,118, Nov. 10, 1878; (184-45).

Claim 16 is rejected on Brown, cited above. Gaskets in

33 216586-32

Plaintiff's Exhibit No. 39.

Serial No. 216,586-----2.

connection with bayonet couplings are old in the art as shown in DeGrey of record.

Examiner.

34 Top

216586-3

Plaintiff's Exhibit No. 39.

U. S. Patent Office
MAR 20 1919
DIVISION 45

MAR 20 1919
APPLICATION DIV.
PATENT OFFICE

4 9/C

UNITED STATES PATENT OFFICE

Applicant - Arthur V. Cullborg — Case 2

Invention - Lubricating Apparatus — Room 379 Div. 45

Serial N. - 216,586 — Filed Feb. 11, 1918

Hon. Commissioner of Patents,

Washington, D. C.

Sir:

Please amend as follows:

Claim 13, line 1, cancel "discharge opening" and substitute therefor --flexible discharge conduit--; line 3, cancel "opening" and substitute --conduit--.

note

Cancel claims 3, 4, 15 and 16 and renumber the claims.

Add the following claims:

13. The combination with a grease gun having a discharge conduit, of means for connecting said conduit with a bearing comprising a tubular member, coacting means on said conduit and said tubular member for detachably connecting said conduit and tubular member, and a flexible member for sealing the joint between said conduit and said tubular member, said flexible member having an aperture for the passage of lubricant from said conduit to said tubular member, a portion of one face of said flexible member being positioned so as to be subjected to any pressure created in said conduit to force it against said tubular member.

for C C'

14. The combination with means for supplying lubricant under pressure comprising a discharge member, of means for connecting said discharge member to a bearing

Bottom 216586-34

Plaintiff's Exhibit No. 39.

comprising a tubular member, and means for detachably connecting said members in sealed relation comprising means subjected to the pressure created in said members, the said means being positioned between said members and held against one of said members by said pressure.

10. The combination with a member for receiving lubricant, of means for supplying lubricant thereto under pressure comprising a tubular member, means for detachably connecting said tubular member to said lubricant receiving member in sealed relation comprising a flexible member provided with an aperture for the passage of lubricant, one face of said member being subjected to the pressure of the lubricant.

REMARKS

The above amendments have been made in view of an oral interview had with the Principal Examiner and the Assistant Examiner having charge of this application and in an endeavor to place this application in condition for immediate allowance certain of the claims have been canceled as it is believed that the remaining claims sufficiently cover the subject-matter of the rejected claims.

Reconsideration of claims 5, 6 and 10 is respectfully requested. These claims relate to the specific means which the applicant employs for connecting the coupling member of his grease gun with the coupling member attached to the bearing to be lubricated. Neither of the references disclose a combination similar to that set forth in claims 5 and 6, nor a grease cup responding to the terms of claim 10. The patent to DeGrey is drawn from an entirely non-analogous art and should, for that reason, be withdrawn as a reference. In the argument accompanying the last amendment counsel for applicant referred to a number of

court decisions showing that it is the general practice of the Federal Courts to exclude as anticipations any devices which were not designed nor intended to be used nor adapted to be used for the purpose for which the patentee's structure was designed, intended and adapted to be used and especially so where it was shown that the patentee's device had found instant favor and gone into extensive use. It might be stated in connection with this application that the applicant's construction has been upon the market but a short time, substantially one year, and during that time 25,000 sets of equipment have been sold, each set including a grease gun and a plurality of grease cups or coupling members, usually about 30 in number. These devices have substantially all been applied to automobiles. At the present time several large manufacturers of automobiles and trucks have standardized the applicant's devices and a number of other automobile manufacturers have signified that they will also standardize this equipment for their machines.

It appears to counsel that the above facts are sufficient evidence of invention in the applicant's construction. The instant favor with which it has been received indicates that it possesses great merit and it is respectfully submitted that if this construction was obvious and possessed such great merit it would have been adopted long ago. While the construction is simple and the combination does involve elements which are old in many arts and relations, it appears that the applicant has selected and combined those elements which have resulted in a commercial structure. While certain patents disclose applicant's broad combination, such as the patent to MacClyment and other patents cited at the oral inter-

36-32 216596-36

Plaintiff's Exhibit No. 39.

view above referred to, these devices have not attracted the attention of manufacturers. A consideration of the construction of these devices explains the cause of this condition. They were not practical and they were not a commercial possibility. The applicant's device is not only extremely practical and serviceable but it is a commercial article as well. As stated above, if this construction was obvious from the devices disclosed in the references cited by the Examiner it seems clear that it would have been placed in use long ago.

The patent to Reimund et al. relates to a grease cup having a cover which is secured to the grease cup by means of a bayonet coupling. In this construction the pins are secured to the grease cup by being inserted in openings on opposite sides of the cup. To manufacture such a device two drilling operations would be required, two pins must be made and two separate operations performed to insert the pins in the openings. In the applicant's construction the opening for receiving the pin can be performed by a single drilling operation and the pin can be inserted by a single operation. The cost in construction is, therefore, materially reduced and it is believed that for this reason alone this claim recites patentable subject-matter.

Claim 13 is directed to the same subject-matter as claims 5, 6 and 10 and it is thought to be patentable for the same reasons.

Three new claims have been submitted all of which are directed to that feature of the applicant's construction by means of which the joint or connection between the coupling member connected to the end of the discharge conduit and the coupling member secured to the bearing is

 216586-37

Plaintiff's Exhibit No. 39.

sealed or made fluid-tight against the pressure employed. It will be noted that the opening in the gasket which is positioned in the coupling member secured to the end of the discharge conduit is smaller in diameter than the adjacent opening in the coupling member, thereby leaving a portion of the inner surface of the gasket exposed to the pressure of the lubricant. This pressure tends to force the gasket against the end of the coupling member secured to the bearing and the pressure of the lubricant itself is thus utilized for sealing the joint or connection between the two coupling members. None of the references cited during the prosecution of this application disclose a construction in which the pressure of the lubricant itself is used to secure a tight connection between the two elements which must be joined. In the patent to Mac Clyment a screw-thread connection is employed. Such a connection is impractical for the reason that it requires too much time to make the connection. The threaded portions of the connected members must be of considerable length in order to insure a fluid-tight connection and the screw threads themselves are liable to become damaged and rendered useless by coming into contact with other objects, it being common practice to keep grease guns and other similar devices in tool-boxes where they are subjected to blows from other tools.

In the patent to Brown no means corresponding to the applicant's gasket is employed and in order to insure a fluid-tight connection between the grease gun, to which he refers as being disclosed in his patent No. 1,027,588, and his grease cup it will be necessary to accurately grind not only the contacting surfaces of the parts which actually convey the lubricant but also those parts which

form the means for establishing the mechanical connection between the grease cup and the grease gun. This method of construction would be too costly to permit the device to be commercially exploited.

The German patent to Bitter discloses no means whatever for establishing a tight joint capable of withstanding high pressures between the discharge conduit of the grease cup and the grease cup.

Allowance of this application is, for the above reasons, respectfully requested.

Respectful..

ARTHUR V. GULLBORG

By Williams, Bradbury & Lee
Attorneys.

Washington, D. C.,
March 20, 1919

39

316596-39

273

Plaintiff's Exhibit No. 39.

Div. 48 Room 279

Paper No. 10

DEPARTMENT OF THE INTERIOR

B-W

UNITED STATES PATENT OFFICE

WASHINGTON March 24, 1919.

Williams, Bradbury & Soe,

Monadnock Block,

Chicago, Ill.

Please find below a communication from the EXAMINER in charge of the application of

Arthur V. Gullborg, Serial No. 216,586, filed Feb. 11, 1918,

for Lubricating Apparatus.

James T. Newton

Commissioner of Patents

Amended March 20, 1919.

Claims 5, 6, 10 and 12 are finally rejected for the reasons and references of record.

Claims 1 to 4 inclusive, 7, 8, 9, 11, 13 to 15 inclusive are, as at present advised, allowable.

Examiner.

40

216586-40

274

Plaintiff's Exhibit No. 39.

#11
D.

APR 12 1919 PATENT OFFICE

U. S. Patent
APR 14 1919
DIVISION 4

UNITED STATES PATENT OFFICE

Applicant - Arthur V. Gullborg — Case B

Invention - Lubricating Apparatus — Div. 45 Room 578

Serial No. - 216,586 — Filed February 11, 1918.

1315 Monadnock Block,
Chicago, April 10, 1919.

Hon. Commissioner of Patents,
Washington, D. C.

Sir:

In the matter of the above entitled application and in response to Official Action, Paper No. 10, dated March 28, 1919, applicant amends as follows:

/ Cancel claims 5, 8, 10, and 13, and renumber the remaining claims.

REMARKS:

The above amendment cancels all of the rejected claims in this application and apparently places it in condition for allowance, which is respectfully requested.

Inasmuch as the applicant is desirous of having this application issued as a patent at the earliest possible moment, it will be greatly appreciated if this application is passed to issue at once.

Respectfully,
ARTHUR V. GULLBORG,
By Williams, Bradbury & Co.
Attorneys.

41

2165-86-41

275

Plaintiff's Exhibit No. 39.

073

DEPARTMENT OF THE INTERIOR

UNITED STATES PATENT OFFICE

WASHINGTON

May 8, 1919

Petition:

Application of A. V. Gullborg

Serial No. 216586

Invention:

This petition is referred to the Examiner in charge of Division 45 for recommendation.

In case he recommends adversely he will state his reasons therefor and furnish a copy thereof to petitioner.

42 J. S. Newton

Commissioner of Patents.

216586-42

Plaintiff's Exhibit No. 39.

12

Amendment B Rule 78

UNITED STATES PATENT OFFICE

Applicant - Arthur V. Gullborg — Case 2

Invention - Lubricating Apparatus — Div. 46 Room 379

Serial No. - 216,586 — Filed February 11, 1918

1315 Monadnock Block
Chicago, April 30, 1919

Hon. Commissioner of Patents
Washington, D. C.

Sir:

In the matter of the above entitled application and in response to Official Action, Paper No. 10, dated March 26, 1919, applicant amends as follows:

Cancel claims 3, 4, 9, 10 and 11, and renumber the remaining claims 1 to 8 inclusive.

NOTE:

The claims cancelled by this amendment are directed to substantially the same subject matter as certain claim filed and allowed in the co-pending application of the applicant, Serial No. 267,858, filed December 21, 1915, and in order to avoid any question of double patenting these claims have, by an amendment of even date, been transferred to this application.

Respectfully submitted,

43. ARTHUR V. GULLBORG,

By Williamson Brady & Co.

216586-43 Attorneys.

Plaintiff's Exhibit No. 39.

Part of #12

DEPARTMENT OF THE INTERIOR,
UNITED STATES PATENT OFFICE,
Washington, D. C., May 12, 1919.

In re application
Arthur V. Gullborg,
Serial No. 216,586,
Filed Feb. 11, 1918,
Allowed April 19. 1919,
Lubricating Apparatus.

Hon. Commissioner of Patents,

Sir:

The accompanying amendment submitted under provisions of Rule 78 cancels certain claims in the application to be presented in a copending application in order to avoid double patenting. It is recommended that the amendment be entered.

The final fee has not been paid.

Respectfully,

Examiner, Division 45.

APPROVED:

MAY 12 1919

Assistant Commissioner

44

216586-44

Plaintiff's Exhibit No. 39.

210 ADDRESS ONLY THE COMMISSIONER OF PATENTS WASHINGTON, D. C.

Letter No. 13

DEPARTMENT OF THE INTERIOR
UNITED STATES PATENT OFFICE
WASHINGTON

May 14, 1919.

In the matter of the Application of Arthur W. Gullborg Lubricating Apparatus; Filed Feb. 11, 1918 Serial No. 216,586. } Amendment.

Sir:

You are hereby informed that the recommendation of the examiner that the amendment be admitted under the provisions of Rule 78, has been approved by the First Assistant Commissioner and the amendment entered.

By direction of the Commissioner:

Very respectfully,

M. H. Coulston,

Chief Clerk.

F.

Arthur V. Gullborg,
c/o Williams, Bradbury & See
Monadnock Block
Chicago, Ill.

45

216586-45

Plaintiff's Exhibit No. 39.

TELEPHONES HARRISON 3[illegible]

Run 379

(45) Paper No. 14

LYNN W. WILLIAMS
[illegible] C. BRADBURY
ROBERT H. SEE
ALBERT G. MICALES
ROBERT F. BRACKE
EARL F. PIERCE

WILLIAM BRADBURY & SEE
ATTORNEYS AND COUNSELORS
IN
PATENT AND TRADE MARK CAUSES
1315 MONADNOCK BLOCK
CHICAGO

May 26, 1919

Hon. Commissioner of Patents
Washington, D. C.

Sir:

Will you kindly permit the Misses Parkins to withdraw from the Patent Office files the application of Arthur V. Gullborg, serial No. 216,586, filed February 11, 1918, for the purpose of preparing certified copies thereof?

Respectfully,

Williams Bradbury & See
216586-46

280

Plaintiff's Exhibit No. 39.

ADDRESS ONLY THE COMMISSIONER OF PATENTS, WASHINGTON, D. C.

2-181 Serial No. 216,886

DEPARTMENT OF THE INTERIOR.

UNITED STATES PATENT OFFICE

WASHINGTON April 19, 1919.

Arthur V. Gullberg

Sir: Your APPLICATION for a patent for an IMPROVEMENT in

Lubricating Apparatus

filed Feb. 11, 1918, has been examined and ALLOWED.

The final fee, TWENTY DOLLARS, must be paid not later than SIX MONTHS from the date of this present notice of allowance. If the final fee be not paid within that period, the patent on this application will be withheld, unless renewed with an additional fee of $15, under the provisions of Section 4897, Revised Statutes.

The office delivers patents upon the day of their date, and on which their term begins to run. The printing, photolithographing, and engrossing of the several patent parts, preparatory to final signing and sealing, will require about four weeks, and such work will not be undertaken until after payment of the necessary fee.

When you send the final fee you will also send, DISTINCTLY AND PLAINLY WRITTEN, the name of the INVENTOR, TITLE OF INVENTION AND SERIAL NUMBER AS ABOVE GIVEN, DATE OF ALLOWANCE (which is the date of this circular), DATE OF FILING, and, if assigned, the NAMES OF THE ASSIGNEES.

If you desire to have the patent issue to ASSIGNEES, an assignment containing a REQUEST to that effect, together with the FEE for recording the same, must be filed in this office on or before the date of payment of final fee.

After issue of the patent uncertified copies of the drawings and specifications may be purchased at the price of FIVE CENTS EACH. The money should accompany the order. Postage stamps will not be received.

Final fees will NOT be received from other than the applicant, his assignee or attorney, or a party in interest as shown by the records of the Patent Office.

Respectfully,

James T. Newton

Commissioner of Patents.

Williams, Bradbury & Sea,

Monadnock Block,

Chicago, Ill.

47 2166-E6-47

IN REMITTING THE FINAL FEE GIVE THE SERIAL NUMBER AT THE HEAD OF THIS NOTICE.

UNCERTIFIED CHECKS WILL NOT BE ACCEPTED.

Plaintiff's Exhibit No. 39.

WILLIAMS, BRADBURY & SEE
ATTORNEYS AND COUNSELORS
PATENT AND TRADE MARK CAUSES
1213 HOMAN BLOCK
CHICAGO

RECEIVED
MAY 28 1919
U.S. PAT. OFFICE

May 1, 1919.

Hon. Commissioner of Patents,
Washington. D. C.

S i r:,

Enclosed herewith please find Mr. Williams' check for $20.00, in payment of the final ornament fee on the patent application of Arthur V. [illegible]rg Serial No. 216,586, filed February 11, 1918, allowed April 19, 1919, covering an improvement in Lubricating Apparatus.

Respectfully,

Williams Bradbury, See

Enclosure.

48

216586-48

282

Plaintiff's Exhibit No. 39.

A. V. GULLBORG.

LUBRICATING APPARATUS.

APPLICATION FILED FEB. 11, 1918.

1,307,733.

Patented June 24, 1919.

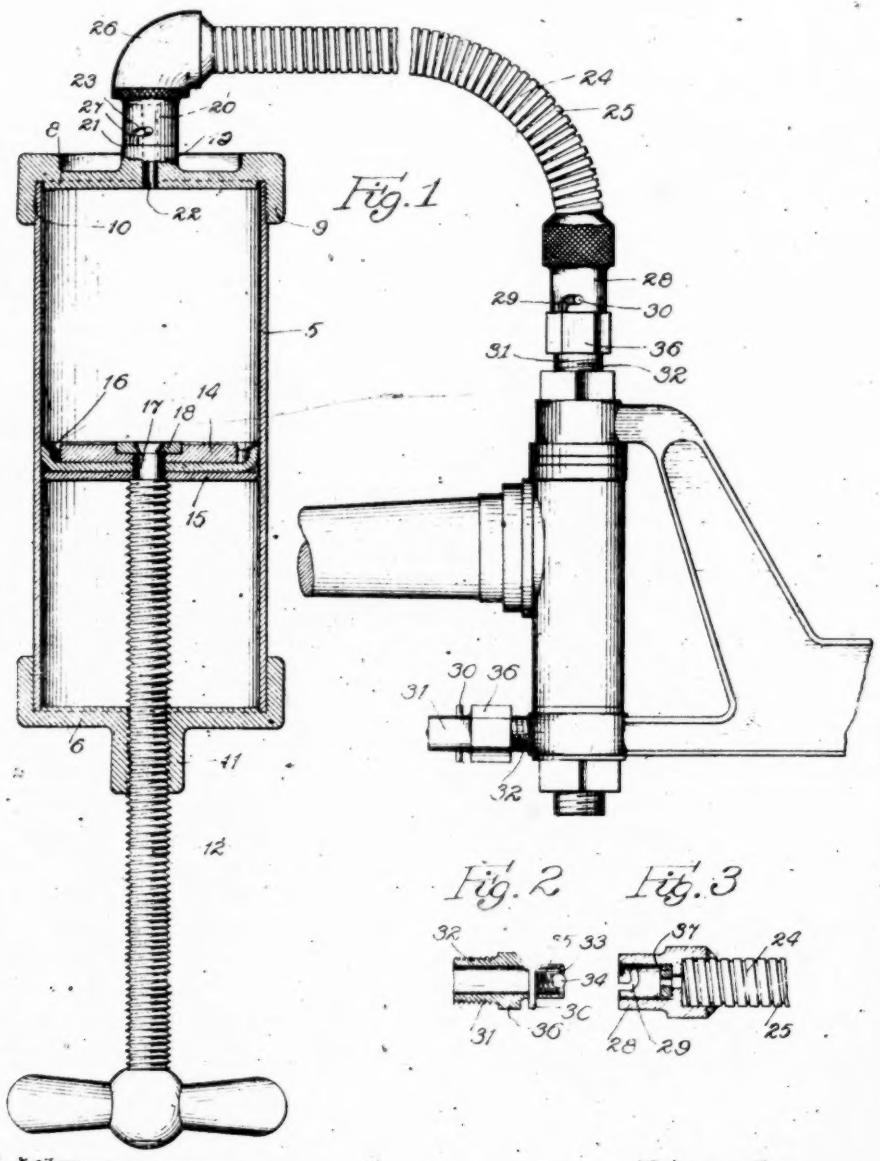

Fig. 1

Fig. 2

Fig. 3

Witnesses:
Andrew Wintercorn
Earl F. Pierce

Inventor:
Arthur V. Gullborg
By Williams Bradbury & Lee
Attys.

283

Plaintiff's Exhibit No. 39.

UNITED STATES PATENT OFFICE.

ARTHUR V. GULLBORG, OF CHICAGO, ILLINOIS.

LUBRICATING APPARATUS.

1,307,733. Specification of Letters Patent. Patented June 24, 1919.

Application filed February 11, 1918. Serial No. 216,886.

To all whom it may concern:

Be it known that I, ARTHUR V. GULLBORG, a citizen of the United States, residing at Chicago, in the county of Cook and State of Illinois, have invented a certain new and useful Improvement in Lubricating Apparatus, of which the following is a full, clear, concise, and exact description, reference being had to the accompanying drawings, forming a part of this specification.

This invention relates to lubricating apparatus and is particularly concerned with the provision of means for supplying lubricating grease to bearings which are more or less inaccessible. One object of my invention is to provide means of the character described comprising a novel grease pump which cooperates with a grease cup of novel construction to entirely fill the grease cup without wasting any of the lubricating grease. Another object of my invention is to provide a grease pump having a flexible discharge conduit. A still further object of my invention is to provide a grease pump having a flexible discharge conduit provided with means for interchangeably locking either end thereof to said grease pump or to the grease cups which are being filled by the grease pump, and a still further object is to provide a flexible discharge conduit for my improved grease pump one end of said conduit being provided with a straight coupling and the other end thereof being provided with an L-shaped coupling, whereby, by the use of either one or the other of these couplings it is possible to obtain access to grease cups in comparatively inaccessible places. Other objects, adaptabilities, and capabilities will appear as the description progresses, reference being had to the accompanying drawings, in which—

Figure 1 illustrates my improved grease pump supplying grease to one of my novel grease cups, the grease pump being shown partially in longitudinal section. In this view my improved grease cups are shown applied to a steering knuckle of an automobile;

Fig. 2 is a longitudinal section through my improved grease cup; and

Fig. 3 is a longitudinal section through one of the coupling members.

Referring to the drawings, the reference character 5 indicates the barrel of my improved grease pump, one end of which is closed by a head 6, which may be soldered or otherwise secured to the end of the barrel. The opposite end of the barrel is closed by the head 8, which has an internally threaded flange 9 for receiving the external threads 10 on the end of the barrel. The head 6 is provided with a central boss 11, which is provided with a screwthreaded bore for receiving the screwthreaded piston rod 12. The rod 12 is provided with a handle 13 for rotating the same. The inner end of the rod 12 has a piston mounted thereon which comprises the spaced disks 14 and 15 between which is confined the cup leather 16, the two disks 14 and 15 and the cup leather being rotatably mounted upon the reduced end 17 of the piston rod and retained in place by means of a washer 18, through which the end of the piston rod extends and is riveted over to secure the washer thereto.

The head 8 is provided with a central boss 19 having a reduced portion 20, shown in dotted lines in Fig. 1, forming a shoulder 21 and a discharge opening 22 formed therethrough. A pin 23 extends through the reduced portion 20 and from both sides thereof. The discharge conduit 24 is formed from a piece of flexible duct, preferably comprising an outer spiral metallic rib 25. There are numerous flexible ducts in commercial use which may be employed for this part of my invention, and further description thereof appears to be unnecessary. At one end of the duct 24 I provide an L-shaped coupling 26 having bayonet slots 27, one of which is not shown, which co-act with the opposite ends of the pin 23 to secure the coupling to the pump. The opposite end of the conduit 24 is provided with a straight coupling 28 having bayonet slots 29, one of which is not shown, for co-acting with the opposite ends of the pin 30 of my novel grease cup.

From the above description it will be clear that either coupling member can be connected with either the pump or with the grease cup. By using the L-shaped coupling for connecting with the grease cup it is sometimes possible to gain access to a grease cup which would not otherwise be accessible.

My novel grease cup comprises a tubular member 31 having the screwthreads 32 at one end thereof for securing them to a bearing, and the other end thereof being flanged inwardly as shown at 33, for the purpose of

214

Plaintiff's Exhibit No. 39.

providing a seat for the ball closure 34. This closure is urged against its seat by means of a compression spring 35, which is confined between the pin 30 and the closure 34. The central portion of my grease cup is hexagonal in cross section, as indicated at 36, thereby providing means for receiving the jaws of a wrench to screw the cup into place.

In Fig. 3 the reference character 37 indicates a gasket made of felt or other suitable material for sealing the connection between the coupling and the grease cup. From this construction it will be seen that when the coupling member is secured to the grease cup by means of the bayonet connection, there will be no chance for the grease to escape between these two members when the piston rod 12 is rotated to force the piston inwardly, and thereby force the grease into the grease cup. This is an improved feature of my invention, for the reason that in prior grease pumps with which I am acquainted, no means has been provided for locking the discharge end of the nozzle to the grease cup, and consequently, if more grease than is necessary to fill the grease cup is forced through the nozzle, the excess quantity of grease merely overflows the edge of the grease cup and is wasted. With my improved construction there is no chance for grease being wasted in this manner. Furthermore, it is possible completely to fill the grease cup with grease, which is a result impossible of being obtained with the old type of grease pumps for the reason that by the use of these pumps more or less air always became entrapped in the grease.

Another advantage of my construction lies in the fact that after the coupling member of my grease pump has been connected with the grease cup, the pump can be operated without paying any attention to the location of the grease cup.

While I have disclosed the preferred embodiment of my invention, it is to be understood that it is not limited to the details of the structure described, but is capable of other adaptations and modifications within the scope of the appended claims, some of which are broad enough to include constructions in which the grease cups are entirely dispensed with and means are provided for detachably connecting the grease pump with members having apertures formed therein for conveying grease to the parts to be lubricated.

Having thus described my invention, what I claim as new and desire to secure by Letters Patent of the United States is:

1. The combination with a grease pump having a discharge opening and a flexible discharge conduit provided at one end with a straight coupling and at the other end with an L-shaped coupling, of a grease cup and means on said grease pump and grease cup for co-acting with said couplings to interchangeably connect either end of said conduit with said pump and cup respectively.

2. The combination with a grease pump having a discharge opening and a discharge conduit provided at one end with a straight coupling and at the other end with an L-shaped coupling, of a grease cup and means on said grease pump and grease cup for co-acting with said couplings to interchangeably connect either end of said conduit with said pump and cup respectively.

3. A grease cup comprising a tubular member having screwthreads at one end and having the other end flanged inwardly to provide a closure seat, a closure, a pin extending through said tubular member and on both sides thereof, and a spring confined between said pin and closure and tending to hold said closure on said seat.

4. A grease cup comprising a tubular member having one end flanged inwardly to provide a closure seat, a closure, a pin extending through said tubular member and on both sides thereof, and a spring confined between said pin and closure and tending to hold said closure on said seat.

5. A grease cup comprising a tubular member having one end flanged inwardly to provide a closure seat, a closure, a pin extending inwardly and outwardly from one wall of said tubular member, and a spring confined between the inner end of said pin and said closure to hold said closure on its seat.

6. A grease pump having a discharge opening in combination with a discharge conduit having a straight coupling member at one end and an L-shaped coupling member at the other end, said couplings and pump being provided with co-acting means for connecting either of said couplings with said pump.

In witness whereof, I hereunto subscribe my name this 1st day of February, 1918.

ARTHUR V. GULLBORG.

Witnesses:
H. M. CAULFIS,
OSCAR RAHM.

Plaintiff's Exhibit No. 39.

130733

1918

CONTENTS:

Page 1

1. Application ..... papers.
2. Ry ..... Mar. 20, 1918
3. Arnett A ..... June 24, 1918
4. Ry ..... July 22, 1918
5. Letter ..... Aug. 24, 1918.
6. [illegible]
7. [illegible] B ..... FEB [illegible]
8. [illegible]
9. Amendment C ..... MAR [illegible]
10. [illegible]
11. Amendment D
12. Amendment E Pub. 78 ..... MAY [illegible] 1919
13. Notice of entry of Amendment May 14/19
14. Power to Inspect 6-2-19

Plaintiff's Exhibit No. 39.

Div. 45.

216 586

A. V. GULLBORG.

1,307,733.

Patented June 21, 1919

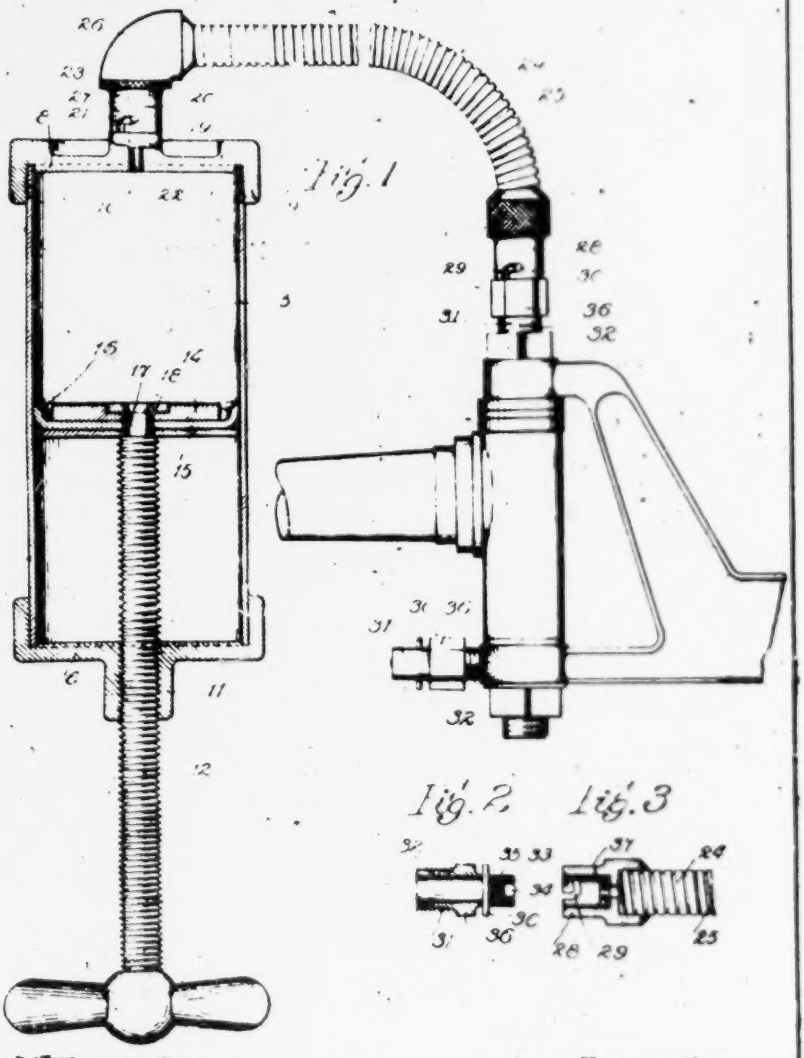

Witnesses:
Andrew Wintersom
Earl F. Pierce

Inventor
Arthur V. Gullborg
By Williams Bradbury & Lee
Attys.

217

Plaintiff's Exhibit No. 40.

Plf's Ex # 40
4/2/33 [illegible]

390

DEPARTMENT OF COMMERCE
UNITED STATES PATENT OFFICE

To all persons to whom these presents shall come, Greeting:

THIS IS TO CERTIFY that the annexed is a true copy from the records of this office of the File Wrapper and Contents, with exception of Notices of Suit; and Drawing, in the matter of

Letters Patent of

Arthur V. Gullborg,

Number 1,307,734, Granted June 24, 1919,

for

Improvement in Lubricating Means.

IN TESTIMONY WHEREOF I have hereunto set my hand and caused the seal of the Patent Office to be affixed, at the City of Washington, this eighteenth day of May, in the year of our Lord one thousand nine hundred and thirty-one and of the Independence of the United States of America the one hundred and fifty-fifth.

ATTEST: L. Erbelson
Chief of Division

Thomas E. Robertson
Commissioner of Patents

288

Plaintiff's Exhibit No. 40.

NUMBER (Series of 1915), 267858 1918 (EXT'S BOOK) 236

1307734

DIV. 45 PATENT No.

Name Arthur V. Gullborg

of Chicago,

County of

State of Illinois

Invention Lubricating Means

	ORIGINAL	RENEWED
Petition	Dec 21, 1918	
Affidavit	" " 1918	
Specification	" " 1918	
Drawing	" " 1918	
Photo	191	
First	15 Dec 21, 1918	26 387
	191	
Appl. first complete	Dec 21, 1918	

PARTS OF APPLICATION FILED

Examined and Passed for Issue 191

Exr. Div. Exr. Div.

Notice of Allowance March 29, 1919

Final Fee $20 May 28, 1919

Patented JUN 24 1919

Attorney Williams, Bradbury & Lee, Monadn. (Chicago, Ill.) Block

Associate Attorney

(No. of Claims Allowed 18) Print Claims 4 in O. G. (Cl. 184 ...)

Title as Allowed Lubricating Means

267858-252

Division of App., No.

Plaintiff's Exhibit No. 40.

267,854

ATTORNEYS AND COUNSELORS
PATENT AND TRADE MARK CAUSES
CHICAGO

December 18, 1918

Hon. Commissioner of Patents
Washington, D. C.

Dear Sir:

Please file the enclosed application of Arthur V. Cullborg, Case 3, covering improvement in Lubricating Means, and apply the enclosed check of Lynn A. Williams for $15 in payment therefor.

Yours very truly,

William Bradbury & Wes

3

267854

290
Plaintiff's Exhibit No. 40.

267,858-1

5672

U. S. P.
DEC 30 1918
DIVISION

TO THE COMMISSIONER OF PATENTS:

Your petitioner, ARTHUR T. GULLBORG, a citizen of the United States, and resident of Chicago, in the County of Cook, and State of Illinois, whose post-office address is C/o Alemite Metals Company, 341 West Chicago Avenue, Chicago, Illinois, prays that letters patent may be granted to him for the improvement in LUBRICATING MEANS (Case 3) set forth in the annexed specification, and he hereby appoints WILLIAMS, BRADBURY & SEE (Reg. No. 10,473) a co-partnership composed of Lynn A. Williams, Clifford C. Bradbury, and Robert M. See, of 1315 Monadnock Block, Chicago, Illinois, his attorneys, with full power of revocation and substitution to prosecute this application, to make alterations and amendments therein, to receive the patent, and to transact all business in the Patent Office connected therewith.

Signed at Chicago, in the County of Cook, and State of Illinois, this 14th day of December, A. D. 1918.

Arthur T. Gullborg

267858
2

Plaintiff's Exhibit No. 40.

TO ALL WHOM IT MAY CONCERN:

Be it known that I, ARTHUR V. GULLBORG, a citizen of the United States, residing at Chicago, in the County of Cook and State of Illinois, have invented a certain new and useful improvement in LUBRICATING MEANS, of which the following is a full, clear, concise, and exact description, reference being had to the accompanying drawing, forming a part of this specification.

My invention relates to lubricating means and is especially concerned with means for supplying suitable lubricants to parts of machines or apparatus requiring lubrication where these parts are difficult to gain access to, and is further concerned with the provision of apparatus for supplying lubricants under pressure to movable parts, the said means comprising a grease pump or gun provided with means for detachably connecting it with the various parts to be lubricated.

The objects of my invention are:

1st. To provide novel means for supplying a lubricant under pressure to the parts of an apparatus to be lubricated, the said means comprising a grease pump or gun and means for detachably connecting the discharge of said grease pump or gun with the part to be lubricated.

2nd. To provide novel coupling means for connecting the grease gun with the parts

to be lubricated, the said coupling means being so constructed that when the coupling members are uncoupled or disconnected from each other there will be no excess lubricant on the outer ends of the coupling members.

3d. To provide novel means for effectively sealing the joint between the coupling members so that the lubricant may be forced between the parts to be lubricated under a very heavy pressure.

4th. To provide novel means whereby lubricant may be supplied to parts to which it is difficult to gain access.

5th. To provide novel coupling members to be permanently secured to the parts to be lubricated.

6th. To provide novel means to assist in attaching and detaching a tubular coupling member to a part to be lubricated.

Further objects will appear as the description progresses, reference being had to the accompanying drawing in which,

Fixure 1 is a side elevation showing my improved grease gun,

Figure 2 is a longitudinal section through the coupling member thereof,

Figure 3 is a side elevation of one type of coupling member adapted to be secured to the part to be provided with lubricant and co-acting with the coupling member of my grease gun for connecting the discharge outlet of the grease gun with the part to be lubricated,

Figure 4 is a longitudinal section of the structure shown in Figure 3,

Figure 5 is a longitudinal section through the coupling members shown in Figures 3 and 4, but taken on a plane at right angles to the section plane of

1678584

6

Figures 3 and 4 showing the two coupling members united,

Figure 6 is a more or less conventional plan view of an automobile with the body thereof removed showing the novel means which I provide for conveying lubricant to parts ordinarily difficult to gain access to, the front portion of the automobile chassis being broken away,

Figure 7 is a sectional view showing the means for securing my coupling members to the ends of the conduits for conveying lubricant to the parts difficult of access,

Figure 8 is a side elevation of a modified form of coupling member,

Figure 9 is a side elevation of a still further modification of my coupling member, and

Figure 10 is a perspective view of the means which I employ for rotating the coupling members shown in Figure 9 in either direction to attach it to or detach it from the part to be provided with a lubricant.

Similar characters of reference refer to similar parts throughout the several views.

Referring to the drawings, the reference character 15 indicates the barrel of my improved grease gun or pump which is provided in a wellknown manner with a plunger, not shown, which is reciprocated in the barrel 15 by means of a screw-threaded piston rod 16 which co-acts with a screwthreaded nut 17, the piston 16 being provided with a handle 18. The barrel 15 is provided with ribs or serrugations 15' to insure a firm grip of the hand thereon. A flexible conduit 19, of any

294
Plaintiff's Exhibit No. 40.

5676

suitable and wellknown construction, has one end secured to the discharge outlet 20 of my pump and the other end is provided with a hollow coupling member, indicated in general by the reference character 21. The free end of this coupling member, as shown in Figure 3, is provided with a bayonet slot 22, the transverse portion 23 of which is inclined from the inner end of the longitudinal portion of the slot toward the outer end of the coupling member for a purpose which will be referred to later on. The bore of the coupling member is enlarged at 24 to provide an annular shoulder 25. A perforated cup leather or sealing disk 26 is slidably mounted in the annular portion 24 of the bore of the coupling and is urged against the shoulder 25 by means of a coiled spring 27, one end of which abuts against the cup leather or sealing disk 26 and the other end of which abuts against the adjacent end 28 of the conduit 19. This end of the conduit may be soldered or secured in any convenient manner to the coupling member.

Referring to Figures 3 and 4, the reference character 29 indicates as a whole a second coupling member which co-acts with the coupling member just described. This coupling member is in general tubular in form and is provided at one end with screwthreads 30 for securing it to the part to be lubricated. A pin 31 extends through and projects from the opposite sides of the other end of the tubular member. This end of the tubular member is flanged inwardly, as indicated at 32, to form a valve seat with which the hollow spherical shaped valve 33 co-acts. A spring 34 is interposed between the pin 31 and the hollow

2678586

valve 33 urges the latter against the valve seat 32. My purpose in making the valve 33 hollow is, first, to provide sufficient room for the spring 34 without materially increasing the length of the coupling member, and, second, to provide means which will tend to prevent the spring 34 from buckling or flexing longitudinally when the valve 33 is pushed inwardly to admit the lubricant. My invention contemplates the provision of facets 36 to receive the jaws of a wrench whereby the coupling member may be attached to or detached from the parts to be lubricated.

In Figure 5 I have shown the coupling members 21 and 29 coupled together. In this position it will be noted that the spring 37 is partially compressed and that the sealing disk 28 is displaced from the annular shoulder 25 by the end of the coupling member 29. When the piston of the gun pump is actuated to force lubricant through the conduit 19 under pressure this pressure will cause the sealing disk 26 to seal the joint between the two coupling members and thus prevent any escape of lubricant over the sides of the coupling member 29. On account of the fact that the transverse portion 23 of the bayonet slot in the coupling member 21 is inclined toward the open end of this coupling member it is necessary in order to detach the coupling member from the coupling member 29 to move it toward the coupling member 29. This movement causes an additional small quantity of lubricant to be forced into the coupling member 29. When the coupling member 21 is then turned to permit the pin 21 to slide in the

longitudinal portion of the slot 22 the sealing disk 26 is moved toward the end of the coupling member 29 under the pressure of the spring 34. This causes the sealing disk 26 to move toward the outer end of the coupling member 21 and thereby produces a slight vacuum which causes any grease which might otherwise remain on the outer end of the coupling member 29 or the outer side of the valve 33 to be sucked back behind the sealing disk 26 and thereby prevents any excess of lubricant from remaining on the end of the coupling member 29 or on the outside of the valve.

From the above description it will be seen that I have provided means for conveying a lubricant to the part or parts to be lubricated which not only prevents the loss of lubricant, even though the lubricant may be forced between the bearing surfaces under very high pressure, but also prevents the lubricant from remaining upon exposed portions of the coupling members after these have been uncoupled, and subsequently lost. This feature is of importance where, as I will describe later on, the coupling members are located at readily accessible points and where, in case the parts being lubricated form a part of a motor vehicle or other similar structure, the clothes of the operator are likely to come in contact with these coupling members.

Referring to Figure 6 in which I have disclosed a portion of a motor vehicle with the body thereof removed, the reference character 37 indicates a bearing in the differential casing which is supplied with lubricant by a conduit 38 connected therewith by a suitable hollow coupling 39. The other end of the conduit 38 is

brought forwardly in the vehicle and is secured to either the dash or the instrument board, as may be found convenient, by means of a floor socket 40, shown in detail in Figure 7, which is secured in place by means of the screws 41 and is provided with an internal screwthread for receiving the screwthreaded portion 30 of a coupling member 29'. This coupling member 29' is similar to that shown in Figures 3 and 4, except that it is not provided with the facets 36 for receiving the jaws of a wrench. The forward end of the conduit 38 may be soldered or otherwise secured in the socket 40. The reference character 42 indicates another conduit for conducting oil from the coupling member 29' to the transmission housing 43.

While I have illustrated means for conducting lubricant to but two portions of this automobile vehicle it is to be understood that conduits similar to 38 and 42 may be used for conducting lubricant to any portion of the vehicle which it is desired to lubricate. Furthermore, this feature of my invention is not to be limited to means for lubricating motor vehicles, but is capable of being used for lubricating any apparatus whether the parts to be lubricated are or are not difficult of access.

In Figure 8 I have shown a modified form of a coupling member to be secured to a part to be lubricated. This coupling member is "L" shaped and one end thereof is provided with screwthreads 30' and the other end thereof being provided with a pin 31 and a spring-

Gothic 267857

pressed valve or closure 33 similar to that described in connection with Figures 3 and 4. The purpose of this coupling member is to provide means for connecting the coupling member 31 with a part to be lubricated which would otherwise be difficult of access if provided with a straight coupling member such as that shown in Figures 3 and 4.

In Figure 9 I have disclosed a still further modification of my coupling member wherein it is formed from a tubular member 44 of substantially constant diameter which is not provided with means for co-acting with a wrench to attach or detach it to the part to be lubricated. In order to thus attach or detach this member I provide the means illustrated in Figure 10. This means comprises a sleeve-like member 45 having a bore 46 therein for receiving the tubular member 44 and slots 47 for receiving the ends of the pin 31 of the tubular member 44. The member 45 is provided with facets 48 for co-acting with a wrench or other tool for rotating this sleeve.

While I have described the preferred embodiments of my invention it is to be understood that it is capable of other adaptations and modifications within the scope of the appended claims.

Having thus described my invention what I claim is new and desire to secure by Letters Patent of the United States is:

Plaintiff's Exhibit No. 40.

5681

1. The combination with a hollow coupling member having a pin projecting from one side thereof and a spring-pressed closure, of a pump having a flexible conduit connected with the outlet thereof, a second hollow coupling member secured to the other end of said conduit for receiving the closed end of said first named coupling member and provided with a bayonet slot for receiving said pin, the transverse portion of said slot being inclined from the longitudinal portion thereof towards the outer end of the coupling member, the bore of said coupling member being enlarged to provide a shoulder, a perforated sealing disk slidably mounted in the enlarged portion of said bore, and a spring confined between the ends of said conduit and said disk for urging said disk against said first named coupling member ~~toward said shoulder~~.

per D

2. The combination with a hollow coupling member having a pin projecting from one side thereof and a spring-pressed closure, of a pump, a discharge conduit having one end secured to the outlet of said pump, a second hollow coupling member for receiving the closed end of said first named coupling member secured to the other end of said conduit and provided with a bayonet slot adapted to co-act with said pin, a perforated sealing disk mounted to reciprocate in the bore of said coupling member, means for yieldingly urging said sealing disk against the closed end of said first named coupling member, and means for [illegible] ing the movement of said sealing disk in the direction ~~toward~~ [illegible] coupling member.

267858
11

X 13

300

Plaintiff's Exhibit No. 40.

3. The combination with a hollow coupling member having a spring-pressed closure, of a pump, a discharge conduit having one end secured to the outlet of said pump, a second hollow coupling member for receiving the closed end of said first named coupling member secured to the other end of said conduit, a perforated sealing disk mounted to reciprocate in the bore of said coupling member, means for yieldingly urging said sealing disk against the closed end of said first named coupling member, and means for limiting the movement of said sealing disk toward said second coupling member.

4. The combination with a hollow coupling member having a spring-pressed closure, of a pump, a discharge conduit having one end secured to the outlet of said pump, a second hollow coupling member for receiving the closed end of said first named coupling member secured to the other end of said conduit, a perforated sealing disk mounted to reciprocate in the bore of said coupling member, and means for yieldingly urging said sealing disk against the closed end of said first named coupling member.

5. The combination with a hollow coupling member, of a pump having a discharge outlet provided with a second coupling member for receiving said first named coupling member, a perforated sealing disk slidably mounted in said second coupling member, means for yieldingly holding said sealing disk against the end of said first coupling member, and means for detachably uniting said coupling members comprising

causing said sealing disk to recede from the open end of said second coupling member when said coupling members are uncoupled.

6. The combination with a hollow coupling member, of a pump having a discharge outlet provided with a second coupling member for receiving said first named coupling member, a perforated sealing disk slidably mounted in said second coupling member, means for yieldingly holding said sealing disk against the end of said first coupling member, and means for detachably uniting said coupling members.

7. The combination with a hollow coupling member, of a pump having a discharge outlet provided with a second coupling member for receiving said first named coupling member, a perforated sealing disk slidably mounted in said second coupling member, and means for yieldingly holding said sealing disk against the end of said first coupling member.

8. The combination with a hollow coupling member of means for forcing a lubricant through said coupling member comprising a receptacle having a discharge outlet, a second hollow coupling member connected with said discharge outlet, means for detachably uniting the open ends of said coupling members, and means movable with respect to both coupling members for sealing the joint between said coupling members and for removing excess lubricant from the ends of said coupling members when said coupling members are uncoupled.

267858
13

302

Plaintiff's Exhibit No. 40.

5684

9. The combination with a hollow coupling member of means for forcing a lubricant through said coupling member comprising a receptacle having a discharge outlet, a second hollow coupling member connected with said discharge outlet, and means for detachably uniting the open ends of said coupling members.

10. The combination with a pump having a flexible conduit connected with the outlet thereof, of a hollow coupling member secured to the other end of said conduit and provided with a bayonet slot, the transverse portion of said slot being inclined from the longitudinal portion thereof towards the outer end of the coupling member, the bore of said coupling member being enlarged to provide a shoulder, a perforated sealing disk slidably mounted in the enlarged portion of said bore, and a spring confined between the ends of said conduit and said disk for urging said disk toward said shoulder.

11. The combination with a pump having a discharge outlet, of a coupling member connected with said discharge outlet and provided with a bayonet slot, the transverse portion of said slot being inclined from the inner end of the longitudinal portion thereof toward the outer end of said coupling member, a perforated sealing disk slidably mounted in the bore of said coupling member, and means for yieldingly urging said sealing disk toward the outer end of said coupling member, and means for limiting the movement of said sealing disk toward the outer end.

7. ~~12.~~ The combination with means for supplying lubricant under pressure, said means comprising a discharge outlet, of a coupling member connected with said discharge outlet, a perforated ~~cooking disk~~ cup leather disk slidably mounted in said coupling member, and means for yieldingly urging said ~~cooking disk~~ cup leather toward the outer end of said coupling member.

13. A coupling member comprising a tubular member having one end flanged over to provide a valve seat, a pin extending through said tubular member adjacent one end thereof and from one side thereof, a hollow valve, and a spring interposed between said pin and valve for urging said valve against said seat, one end of said spring being surrounded by said hollow valve.

14. A coupling member comprising a tubular member having a valve seat formed in one end, a pin extending through said tubular member adjacent one end thereof, a hollow valve, and a spring interposed between said pin and valve for urging said valve against said seat, one end of said spring being surrounded by said hollow valve.

15. A coupling member comprising a tubular member provided at one end with a valve seat, a hollow valve co-acting with said valve seat, and a spring for urging said valve against said seat, one end of said spring being surrounded by said hollow valve.

~~16.~~ 8. The combination with an apparatus using

17

5686

a part to be lubricated, of a conduit for conducting lubricant to said part, a coupling member secured to the end of said conduit and provided with a spring-pressed valve closure, means for supplying lubricant to said conduit comprising a receptacle provided with a discharge outlet, a second coupling member connected with said discharge outlet, means for detachably uniting said coupling members, and means for sealing the joint between said coupling member and for removing excess lubricant from the adjacent ends thereof when said coupling members are uncoupled.

27. The combination with an apparatus having a part to be lubricated, of a conduit for conducting lubricant to said part, a coupling member secured to the end of said conduit and provided with means for supplying lubricant to said conduit comprising a receptacle provided with a discharge outlet, a second coupling member connected with said discharge outlet, means for detachably uniting said coupling members, and means for sealing the joint between said coupling members.

16. The combination with an apparatus having a part to be lubricated, of a conduit for conducting lubricant to said part, a coupling member secured to the end of said conduit and provided with means for supplying lubricant to said conduit comprising a receptacle provided with a discharge outlet, a second coupling member connected with said discharge outlet, and means for

detachably uniting said coupling members and for removing excess lubricant from the adjacent ends thereof when said coupling members are uncoupled.

16 19. The combination with an apparatus having a part to be lubricated, of a conduit for conducting lubricant to said part, a coupling member secured to the end of said conduit and provided with means for supplying lubricant to said conduit comprising a receptacle provided with a discharge outlet, a second coupling member connected with said discharge outlet, and means for detachably uniting said coupling members.

20. A hollow "L" shaped coupling member having one end provided with a screw-thread, a pin projecting from said member adjacent the other end, said last named end being provided with a valve seat, a valve co-acting with said seat, and a spring interposed between said valve and pin for urging said valve against said seat.

21. An "L" shaped coupling member having one end screw-threaded, and a spring-pressed closure for the other end.

22. An "L" shaped coupling member having one end screw-threaded, and a closure for the other end.

23. The combination with a tubular coupling member having one end provided with a screw-thread, of a pin projecting from one side of said tubular member, and

Plaintiff's Exhibit No. 40.

means for rotating said tubular member comprising a member provided with a bore for receiving said tubular member, and a slot for receiving said pin.

19 Bot.

267858
18

IN WITNESS WHEREOF, I hereunto subscribe my name this 14th day of December, 1918.

Arthur V Gullborg

WITNESSES:

John E. Carlson

John L Steffen

O A T H

State of Illinois)
) ss:
County of Cook)

ARTHUR V. GULLBORG, the above named petitioner, being duly sworn, deposes and says that he is a citizen of the United States, and resident of Chicago, in the County of Cook, and State of Illinois, and that he verily believes himself to be the original, first, and sole inventor of the improvement in LUBRICATING MEANS (Case 3) described and claimed in the annexed specification; that he does not know and does not believe that the same was ever known or used before his invention or discovery thereof, or patented or described in any printed publication in the United States of America, or any foreign country before his invention or discovery thereof, or more than two years prior to this application, or in public use or on sale in the United States for more than two years prior to this application, that said invention has not been patented in any country foreign to the United States on an application filed by him or his legal representatives or assigns, more than twelve months prior to this application and that no application for patent on said improvement has been filed by him or his representatives or assigns in any country foreign to the United States.

Arthur V Gullborg

Subscribed and sworn to before me this 14th day of December, 1918.

2678 58
19
20

H. E. Johnson
Notary Public.

308

Plaintiff's Exhibit No. 40.

DIV. 45 ROOM 570

Address only "The Commissioner of Patents, Washington, D. C.," and not any official by name.

Paper No. 8

All communications concerning this application should give the serial number, date of filing, title of invention, and name of the applicant.

DEPARTMENT THE INTERIOR

B-W UNITED STATES PATENT OFFICE

WASHINGTON Jan. 16, 1919.

PATENT OFFICE JAN 16 1919

Williams, Bradbury & Lee,

Monadnock Block,

Chicago, Ill.

Please find below a communication from the EXAMINER in charge of the application of

Arthur V. Gullberg, Serial No. 267,858, filed Dec. 21, 1918,

for Lubricating Means.

James T. Newton

Commissioner of Patents.

Division is required as applicant is claiming two separate and independent inventions: First - Claims 1 to 12 inclusiv and 16 to 19 inclusive. Second - Claims 14, 15, 20 to 23 inclusive.

Claims 14, 15, 20 to 23 inclusive belong to Division 39.

The following art is cited as showing something of the state of the art:

Snyder, et al,	1,041,584,	Oct. 15, 1912;	(184-105)
Michelin,	750,675,	Jan. 26, 1904;	" "
DeGrey,	1,017,654,	Feb. 20, 1912;	" "
Winkley,	1,201,414,	Oct. 17, 1916;	" "
Reasoner,	1,126,568,	Jan. 26, 1915;	" "
Wurster,	356,519,	Jan. 25, 1887;	" "
Richardson,	8,251,	July 29, 1851;	(184-89)
Bitter, (German)	6,118,	Nov. 10, 1878;	(184-45).

21

Examiner.

267858

20

Plaintiff's Exhibit No. 40.

UNITED STATES PATENT OFFICE

Applicant - Arthur V. Gullborg — Case 3

Invention - Lubricating means — Div. 45 Room 379

Serial No. - 267,858 — Filed Dec. 31, 1918

1313 Monadnock Block

Chicago, March 7, 1919

Hon. Commissioner of Pats s,

Washington, D. C.

SIR:

In the matter of the above entitled application, and in response to Official Action, Paper No. 3, dated January 16, 1919, applicant amends by cancelling claims 13, 14, 15, 20, 21, 22, and 23, and renumbering the claims.

REMARKS:

The requirement for division having been complied with, action upon the merits of this application is respectfully requested.

Claim 13 has been included in the claims cancelled from this application, as it appears to relate to the same subject matter as claims 14 and 15.

The applicant reserves the right to file a divisional application covering the subject matter of the cancelled claims.

Respectfully,

ARTHUR V. GULLBORG,

by Williams Bradbury & Hu

Attorneys.

240

Plaintiff's Exhibit No. 40.

APPLICATION FILED MAR 20 1919 PATENT OFFICE

U. S. Patent Office

MAR 20 1919

5690

UNITED STATES PATENT OFFICE

Applicant - Arthur V. Gullborg — Case 3

Invention - Lubricating Means — Div. 45 Room 379

Serial No. - 387,858 — Filed Dec. 21, 1918

-----:-----

Hon. Commissioner of Patents,

Washington, D. C.

Sir:

Please amend as follows:

Claim 1, last line, cancel "toward said shoulder" and insert --against said first-named coupling member--.

Claim 3, next to last line, cancel "toward" and insert --in the direction of--.

Claim 12, lines 4 and 6, cancel "sealing disk" and substitute --cup leather--.

Claim 14, next to last line, substitute --a pliable gasket-- for "means".

Cancel claims 5, 6, 7, 8, 9 and 18 and renumber the claims.

Add the following claims:

11. The combination with a bearing provided with a member for receiving lubricant, of means for supplying lubricant thereto comprising a hollow member, means for supplying lubricant to said hollow member under pressure, means for detachably connecting said members, and means for sealing said connection comprising a gasket positioned between said members and held against one of said members by the pressure of the lubricant.

B' 267858 22

13. The combination with a bearing provided with a member for receiving lubricant, of means for supplying lubricant thereto comprising a hollow member, means

23 -1-

Plaintiff's Exhibit No. 40.

for supplying lubricant to said hollow member under pressure, means for detachably connecting said members, means for sealing said connection comprising a gasket positioned between said members and held against one of said members by the pressure of the lubricant, and a spring for initially positioning said gasket against said member.

13. The combination with a receptacle for receiving lubricant, of means for supplying lubricant to said receptacle comprising a hollow member, means for forcing lubricant into said hollow member under pressure, and means for connecting said hollow member to said receptacle in fluid-tight relation comprising a pliable member positioned in said hollow member and having one face for contacting with said receptacle, the other face of said pliable member being subjected to the pressure of the lubricant in said hollow member.

R E M A R K S

The above amendments are made as a result of an oral interview held with the Principal Examiner and the Assistant Examiner having charge of this application and are believed to place this application in condition for allowance.

Certain of the claims have been withdrawn; claim 5 because it inaccurately described the applicant's invention.

Claims 1 to 7, inclusive, 11, 12 and 13 are drawn to cover the means which the applicant employs for sealing the connection between the discharge conduit of his grease gun and the coupling member. This means comprises a cup leather which is initially held in contact with the end of the coupling member secured to the bearing by means of a spring. When pressure is exerted upon the lubricant

the cup leather, being pliable or flexible, is forced tightly against the sides of the coupling member in which it is mounted and against the adjacent end of the coupling member secured to the bearing and effectually seals the joint between these two members so as to prevent any escape of the lubricant, notwithstanding the fact that the lubricant is maintained under an exceedingly high pressure. The nearest approach to this construction is found in the patent to Winkley but in this patent the perforated lower end of his so-called oil cup, which is slightly mounted in the nozzle and which seals the connection between the conduit and the so-called lubricant receptacle, is not flexible but is made of metal and must be ground to make a tight joint with the adjacent surface of the head of the lubricant receptacle. While this construction is practical it is costly to manufacture and any injury to the contacting surfaces which form the seal will prevent these surfaces from contacting and performing their proper functions. The applicant by making use of a cup leather has provided not only a cheap construction but one which will perform its designed function in a very satisfactory manner and which will accommodate itself to any inequalities in the contacting surface or the coupling member, so that it is unnecessary to perform any costly machining operations upon either of the contacting members and any slight irregularities in the surfaces of the contacting members made either during the process of manufacture or accidentally will not interfere with the proper sealing of the connection between the flexible conduit and the coupling member.

None of the remaining references disclose an element which is subjected to the pressure of the lubricant

in order to make a seal for the connection between the conduit and the lubricant receptacle and it is believed that, for the reasons above given, the claims referred to will be found to be patentable.

All of the references cited in the office action of Jan. 16, 1919, and other additional references were considered during the oral interview and it is counsel's understanding that the Principal Examiner and Assistant Examiner believe the claims referred to recite patentable subject-matter.

Claims 8, 9 and 10 are directed to that modification of the applicant's invention in which a conduit is inserted between the coupling member and the bearing so that the coupling members which are intended to form a part of the mechanism to be lubricated can all be positioned at a readily accessible part of the mechanism, the conduit serving to convey the lubricant from its place to the bearings to be lubricated. None of the references disclose a similar combination and in an absence of any other art it is believed these claims will be found to be patentable.

Claims 8 and 10 specify means for removing the excess lubricant from the ends of the coupling members. In the applicant's construction when the coupling member of the grease gun is removed from the coupling member secured to the conduit, the cup leather is forced outwardly by the action of the spring thereby creating a slight suction which is sufficient to pull the lubricant back into the discharge conduit of the grease gun. It will be noted from the drawings that the movement of the cup leather upon the removal of the coupling from the coupling screw to the conduit is quite considerable, thereby affording

5694

sufficient space to receive the lubricant which might otherwise adhere to the end of the coupling member secured to the bearing.

The nearest approach to this construction is found in the patent to Winkley in which the so-called oil cup of the nozzle has a slight movement relatively to the nozzle but in the Winkley construction this movement is so slight that it would never provide sufficient room, nor cause sufficient suction to be produced to remove the excess lubricant. Consequently, while the differences in construction between the applicant's device and the Winkley device are merely differences in degree this difference in degree produces a new result which is not in any way suggested by the Winkley patent.

Allowance of this application is for the above reasons respectfully requested.

Respectfully,

ARTHUR V. GULLBORG,

By William Bradbury Jr.
Attorneys

Washington, D. C.,
March 20, 1919

27

267858
26

315

Plaintiff's Exhibit No. 40.

Part #5—

-073-

DEPARTMENT OF THE INTERIOR

UNITED STATES PATENT OFFICE

WASHINGTON May 8, 1919

Petition:

Application of H. V. Sullberg

Serial No. 267858

Invention:

This petition is referred to the Examiner in charge of Division 45 for recommendation.

In case he recommends adversely he will state his reasons therefor and furnish a copy thereof to petitioner.

28

J. S. Newton

Commissioner of Patents.

27155

27

Plaintiff's Exhibit No. 40.

#5

U.S. Patent Office
MAY 6 - 1919
DIVISION 45

Amendment Rule 78

5695

UNITED STATES PATENT OFFICE

Applicant - Arthur V. Gullborg Case 3

Invention - Lubricating Means Div. 45 Room 379

Serial No. - 267,858 Filed December 21, 1918

1315 Monadnock Block

Chicago, April 30, 1919

Hon. Commissioner of Patents

Washington, D. C.

Sir:

Please amend by adding the following claims:

---

14. The combination with a grease cup comprising a tubular member having one end flanged inwardly to provide a closure seat, a closure, a pin extending through said tubular member and from both sides thereof, and a spring confined between said pin and closure, and tending to hold said closure on its seat, of a grease pump having a discharge conduit, and means co-acting with the ends of said pin for detachably connecting the discharge end of said conduit with said grease pump.

C'

15. The combination with a grease cup comprising a tubular member having a closure seat, a closure, a pin extending through said tubular member and from both sides thereof, and a spring confined between said pin and closure, and tending to hold said closure on its seat, of a grease pump having a discharge conduit, and means co-acting with the ends of said pin for detachably connecting the discharge end of said conduit with said grease cup.

267858
28

29

247

Plaintiff's Exhibit No. 40.

16. The combination with a grease gun having a discharge conduit, of means for connecting said conduit with a bearing comprising a tubular member, co-acting means on said conduit and said tubular member for detachably connecting said conduit and tubular members, and a flexible member for sealing the joint between said conduit and said tubular member, said flexible member having an aperture for the passage of lubricant from said conduit to said tubular member, a portion of one face of said flexible member being positioned so as to be subjected to any pressure created in said conduit to force it against said tubular member.

17. The combination with means for supplying lubricant under pressure comprising a discharge member, of means for connecting said discharge member to a bearing comprising a tubular member, and means for detachably connecting said members in sealed relation comprising means subjected to the pressure created in said members, the said means being positioned between said members and held against one of said members by said pressure.

18. The combination with a member for receiving lubricant, of means for supplying lubricant thereto under pressure comprising a tubular member, means for detachably connecting said tubular member to said lubricant-receiving member in sealed relation comprising a flexible member provided with an aperture for the passage of lubricant, one face of said member being subjected to the pressure of the lubricant.

NOTE:

The above claims have been found allowable in

the co-pending application Serial No. 216,586 of the applicant and are transferred to this application to avoid any question of double patenting.

It is respectfully requested that this amendment be admitted.

Respectfully,

ARTHUR T. GILLBORG

By Williamson, Bradbury & Co.

Attorneys.

267858

30

31

Plaintiff's Exhibit No. 40.

Part of #5-

DEPARTMENT OF THE INTERIOR,
UNITED STATES PATENT OFFICE,
Washington, D. C., May 12, 1919.

In re application
Arthur V. Gullborg,
Serial No. 267,868,
Filed Dec. 21, 1918,
Allowed March 29, 1919,
Lubricating Means.

Hon. Commissioner of Patents,

Sir:

The accompanying amendment submitted under provisions of Rule 78 containing claims which have been taken from another copending application and have been allowed therein, which have been transfered from this application to avoid double patenting. It is recommended that the amendment be entered.

The final fee has not been paid.

Respectfully,

Examiner, Div. 48.

APPROVED
MAY 12 1919
First Assistant Commissioner

32

261 154
31

320

Plaintiff's Exhibit No. 40.

ADDRESS ONLY
THE COMMISSIONER OF PATENTS
WASHINGTON, D. C.

LETTER No. 6

-AEG

DEPARTMENT OF THE INTERIOR
UNITED STATES PATENT OFFICE
WASHINGTON

May 14, 1919.

In the matter of the
Application of
Arthur V. Gullborg,
Lubricating Means;
Filed Dec. 21, 1918
Serial No. 267,858.

Amendment.

Sir:

You are hereby informed that the recommendation of the examiner that the amendment be admitted under the provisions of Rule 78, has been approved by the First Assistant Commissioner and the amendment entered.

By direction of the Commissioner:

Very respectfully,

M. A. Coulston

Chief Clerk.

F.

26-658
32

Arthur V. Gullborg,
c/o Williams, Bradbury & See, 33
Monadnock Bldg.
Chicago, Ill.

Plaintiff's Exhibit No. 40.

45 Paper No 7

Rm 379

WILLIAMS, BRADBURY & SEE
ATTORNEYS AND COUNSELORS
IN
PATENT AND TRADE MARK CAUSES
1115 MONADNOCK BLOCK
CHICAGO

May 28, 1919

Hon. Commissioner of Patents
Washington, D. C.

Sir:

Will you kindly permit the Misses Parkins to withdraw from the Patent Office files for the purpose of preparing certified copies thereof, the application of Arthur V. Gullborg, serial No. 367,858, filed December 21, 1918?

26 58
33

ATTORNEYS ROOM
MAY 28 1919

Respectfully,

Williams, Bradbury & See

34

Plaintiff's Exhibit No. 40.

45 Room 379
Address only
"The Commissioner of Patents,
Washington, D. C."
and not any official by name.

Paper No. 8
All communications regarding this application should give the serial number, date of filing, title of invention, and name of the applicant.

DEPARTMENT OF THE INTERIOR

R-W

UNITED STATES PATENT OFFICE

WASHINGTON June 12, 1919.

EXAMINER'S AMENDMENT

Williams, Bradbury & See,

Monadnock Block,

Chicago, Ill.

Please find below a communication from the EXAMINER in charge of the application of

Arthur V. Gullborg, Serial No. 267,858, filed Dec. 21, 1918,

for Lubricating Means.

James T. Newton
Commissioner of Patents.

In accordance with the provisions of Order No. 2598, dated March 12, 1917, which reads in part as follows:

> * * * * * * *
>
> Obvious informalities in the application may be corrected by the examiner, but said correction must be in the form of an amendment approved by the Principal Examiner in writing, placed in the file, and made a part of the record. The changes specified in the amendment will be entered by the clerk in the regular way.
>
> * * * * * * *

the changes hereinafter specified are made by the examiner in the application above identified.

Should these changes not be satisfactory to the applicant, appropriate amendment may be proposed under the provisions of Rule 78, provided the specification has not been printed.

The application has been amended as follows:

Page 5, last line, change "21" after "pin" to 31.

Page 6, line 9, change "21" to 26.

Claim 9, last word change "member" to members.

35

Examiner

Exhibit 5

267858
34

Plaintiff's Exhibit No. 40.

ADDRESS ONLY THE COMMISSIONER OF PATENTS, WASHINGTON, D. C.

PW 2—181

Serial No. 267,858

DEPARTMENT OF THE INTERIOR

UNITED STATES PATENT OFFICE

WASHINGTON, March 29, 1919.

Arthur V. Gullborg

Sir: Your APPLICATION for a patent for an IMPROVEMENT in Lubricating Means

filed Dec. 21, 1918, has been examined and ALLOWED.

The final fee, TWENTY DOLLARS, must be paid not later than SIX MONTHS from the date of this present notice of allowance. If the final fee be not paid within that period, the patent on this application will be withheld, unless renewed with an additional fee of $15, under the provisions of Section 4897, Revised Statutes.

The office delivers patents upon the day of their date; and on which their term begins to run. The printing, photolithographing, and engrossing of the several patent parts, preparatory to final signing and sealing, will require about four weeks, and such work will not be undertaken until after payment of the necessary fee.

When you send the final fee you will also send, DISTINCTLY AND PLAINLY WRITTEN, the name of the INVENTOR, TITLE OF INVENTION, AND SERIAL NUMBER AS ABOVE GIVEN, DATE OF ALLOWANCE (which is the date of this circular), DATE OF FILING, and, if assigned, the NAMES OF THE ASSIGNEES.

If you desire to have the patent issue to ASSIGNEES, an assignment containing a REQUEST to that effect, together with the FEE for recording the same, must be filed in this office on or before the date of payment of final fee.

After issue of the patent uncertified copies of the drawings and specifications may be purchased at the price of FIVE CENTS EACH. The money should accompany the order. Postage stamps will not be received.

Final fees will NOT be received from other than the applicant, his assignee or attorney, or a party in interest as shown by the records of the Patent Office.

Respectfully,

James T. Newton

Commissioner of Patents.

Williams, Bradbury & See,

Monadnock Block,

Chicago, Ill.

IN REMITTING THE FINAL FEE GIVE THE SERIAL NUMBER AT THE HEAD OF THIS NOTICE.

UNCERTIFIED CHECKS WILL NOT BE ACCEPTED.

36

267,858

324

Plaintiff's Exhibit No. 40.

TELEPHONES HARRISON 3899

LYNN A. WILLIAMS
CLIFFORD C. BRADBURY
ROBERT H. SEE
ALBERT G. MILLER
ROBERT F. BRACKE
EARL F. PIERCE

WILLIAMS, BRADBURY & SEE
ATTORNEYS AND COUNSELORS
IN
PATENT AND TRADE-MARK CAUSES
1315 MONADNOCK BLOCK
CHICAGO

DIRECT
MAY
23
1919
U.S. PAT. OFFICE

May 26, 1919.

Hon. Commissioner of Patents,

Washington, D. C.

S i r:

Enclosed herewith please find Mr. Williams' check for $20.00, in payment of the final government fee on the patent application of Arthur V. Gullborg, Serial No. 267,858, filed December 21, 1918, allowed March 29, 1919, covering an improvement in Lubricating Means.

Respectfully,

Williams, Bradbury & See

Enclosure.

37

267858
36

325

Plaintiff's Exhibit No. 40.

WILLIAMS BRADBURY MC CALEB & HINKLE
PATENT AND TRADE MARK LAW
CHICAGO

U.S. PAT. OFFICE

August 27, 1927

Hon. Commissioner of Patents,
Washington, D. C.

Sir: In re: Disclaimer in Gullborg Patent No. 1,307,734

Enclosed herewith is formal Disclaimer, under Section 4917, U. S. Rev. Stats., of claim 12 of Gullborg patent No. 1,307,734, granted on June 24, 1919, together with our check for $10.00 to cover the Disclaimer fee.

Respectfully,

Williams, Bradbury, McCaleb & Hinkle

Encl.

26 ~~827~~
27

Plaintiff's Exhibit No. 40.

September 21,1927.

Williams, Bradbury,McCaleb & Hinkle,
1315 Monadnock Block,
Chicago, Ill.

Gentlemen:

Enclosed please find the subject matter of the disclaimer filed in Patent No.1307734, granted to Arthur V. Gullborg, June 24,1919, to be attached to the original patent now in your custody.

Very truly yours,

J.A.Brearley,
Chief Clerk.

Enclosure.

26 ~~328~~ 39 2678

257

327

Plaintiff's Exhibit No. 10.

WILLIAMS BRADBURY McCALEB & HINKLE
1818 Monadnock Block Chicago

D I S C L A I M E R

Under Section 4917 U. S. Rev. Stats.

1927 PATENT OFFICE

TO THE COMMISSIONER OF PATENTS:

Your petitioner, THE BASSICK MANUFACTURING COMPANY, a corporation organized and existing under and by virtue of the laws of the State of Delaware and having its principal place of business at 2650 North Crawford Avenue, in Chicago, the County of Cook, and State of Illinois, represents that in the matter of a certain improvement in LUBRICATING MEANS, for which Letters Patent of the United States No. 1,307,734 were granted to one Arthur V. Gullborg, on the 24th day of June, 1919, it is the assignee of the entire right, title and interest in and to said Letters Patent and the inventions disclosed therein, as evidenced by the following assignments:

Assignment from Arthur V. Gullborg to the Alemite Die-Casting & Mfg. Co. Recorded on the 10th day of March, 1920 in Liber T 109, page 402 of Transfers of Patents.

Assignment from Alemite Die-Casting & Mfg. Co. to John S. Gullborg an undivided eighty/three hundred ninety-fifths (80/395) interest, to C. M. Hedman an undivided seventy-five/three hundred ninety-fifths (75/395) interest, to H. R. Hedman, an undivided seventy-five/three hundred ninety-fifths (75/395) interest, to A. V. Gullborg an undivided five/three hundred ninety-fifths (5/395) interest, to F. E. Johnson an undivided ten/three hundred ninety-fifths (10/395) interest, and to D. F. Fesler an undivided one hundred fifty/three hundred ninety-fifths (150/395) interest in said patent. Recorded on the 10th day of March, 1920 in Liber T 109, page 403 of Transfers of Patents.

Assignment by John S. Gullborg an undivided eighty/three hundred ninety-fifths (80/395) interest, by C. M. Hedman an undivided seventy-five/three hundred ninety-fifths (75/395) interest, by H. R. Hedman an undivided seventy-five/three hundred ninety-fifths (75/395) interest, by A. V. Gullborg an undivided five/three hundred ninety-fifths (5/395) interest, by F. E. Johnson an undivided ten/three hundred ninety-

fifths (10/395) interest, and by D. F. Fesler an undivided one hundred fifty/three hundred ninety-fifths interest in said patent to The Bassick Company. Recorded on the 10th day of March, 1920 in Liber T 109, page 406 of Transfers of Patents.

Assignment from The Bassick Company to The Bassick Manufacturing Company of the entire right, title and interest in and to said patent. Recorded on the 19th day of April, 1920 in Liber Q 110, page 55 of Transfers of Patents.

That it has reason to believe that through inadvertence, without any fraudulent or deceptive intention, the specification and claim of said Letters Patent are too broad, including that of which said patentee was not the first inventor. Your petitioner, therefore, hereby enters this disclaimer to that part of the claims in said specification which is in the following words, to wit:

"12. The combination with a bearing provided with a member for receiving lubricant, of means for supplying lubricant thereto comprising a hollow member, means for supplying lubricant to said hollow member under pressure, means for detachably connecting said members, means for sealing said connection comprising a gasket positioned between said members and held against one of said members by the pressure of the lubricant, and a spring for initially positioned said gasket against said member."

SIGNED AT Chicago, in the County of Cook, and State of Illinois, this 26th day of August, 1927.

THE BASSICK MANUFACTURING COMPANY,

By [signature]
Vice President

ATTEST:

[signature]
Asst. Secretary.

T. T. Smerrian

267858

40

Plaintiff's Exhibit No. 40.

A. V. GULLBORG
LUBRICATING MEANS
APPLICATION FILED [illegible]

1,307,734. Patented June 24, 1919.

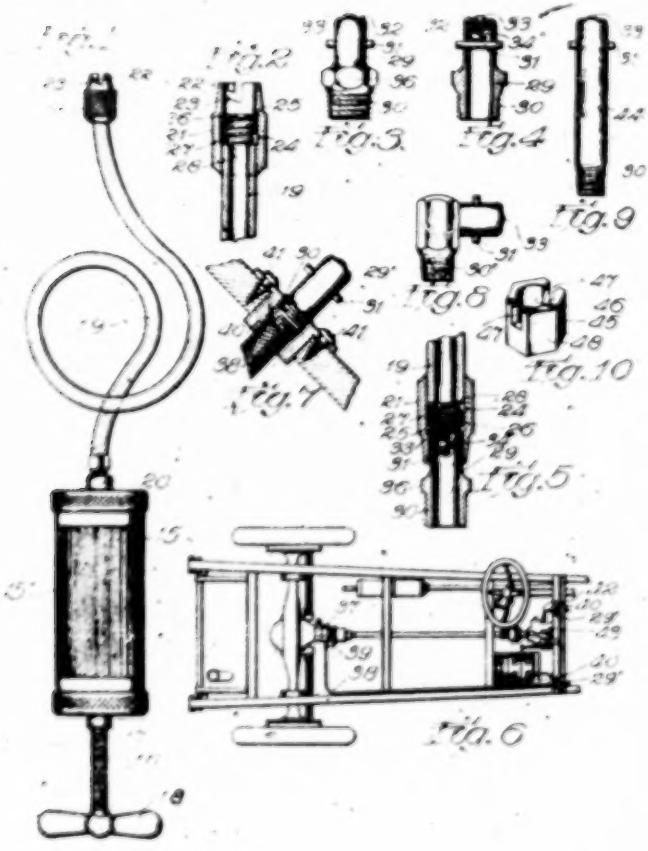

Witnesses:
Andrew Winterstein
Earl F. Pierce

Inventor
Arthur V. Gullborg
Williams, Bradbury & Co.
Attys.

Plaintiff's Exhibit No. 40.

UNITED STATES PATENT OFFICE.

ARTHUR V. GULLBORG, OF CHICAGO, ILLINOIS.

LUBRICATING MEANS.

1,307,734. Specification of Letters Patent. Patented June 24, 1919.

Application filed December 21, 1918. Serial No. 267,856.

To all whom it may concern:

Be it known that I, ARTHUR V. GULLBORG, a citizen of the United States, residing at Chicago, in the county of Cook and State of Illinois, have invented a certain new and useful Improvement in Lubricating Means, of which the following is a full, clear, concise, and exact description, reference being had to the accompanying drawing, forming a part of this specification.

My invention relates to lubricating means, and is especially concerned with means for supplying suitable lubricants to parts of machines or apparatus requiring lubrication where these parts are difficult to gain access to, and is further concerned with the provision of apparatus for supplying lubricants under pressure to movable parts, the said means comprising a grease pump or gun provided with means for detachably connecting it with the various parts to be lubricated.

The objects of my invention are:

1st. To provide novel means for supplying a lubricant under pressure to the parts of an apparatus to be lubricated, the said means comprising a grease pump or gun and means for detachably connecting the discharge of said grease pump or gun with the part to be lubricated.

2nd. To provide novel coupling means for connecting the grease gun with the parts to be lubricated, the said coupling means being so constructed that when the coupling members are uncoupled or disconnected from each other there will be no excess lubricant on the outer ends of the coupling members.

3d. To provide novel means for effectively sealing the joint between the coupling members so that the lubricant may be forced between the parts to be lubricated under a very heavy pressure.

4th. To provide novel means whereby lubricant may be supplied to parts to which it is difficult to gain access.

5th. To provide novel coupling members to be permanently secured to the parts to be lubricated.

6th. To provide novel means to assist in attaching and detaching a tubular coupling member to a part to be lubricated.

Further objects will appear as the description progresses, reference being had to the accompanying drawing in which,

Figure 1 is a side elevation showing my improved grease gun;

Fig. 2 is a longitudinal section through the coupling member thereof;

Fig. 3 is a side elevation of one type of coupling member adapted to be secured to the part to be provided with lubricant and co-acting with the coupling member of my grease gun for connecting the discharge outlet of the grease gun with the part to be lubricated;

Fig. 4 is a longitudinal section of the structure shown in Fig. 3;

Fig. 5 is a longitudinal section through the coupling members shown in Figs. 2 and 4, but taken on a plane at right angles to the section plane of Figs. 2 and 4 showing the two coupling members united;

Fig. 6 is a more or less conventional plan view of an automobile with the body thereof removed showing the novel means which I provide for conveying lubricant to parts ordinarily difficult to gain access to, the front portion of the automobile chassis being broken away;

Fig. 7 is a sectional view showing the means for securing my coupling members to the ends of the conduits for conveying lubricant to the parts difficult of access;

Fig. 8 is a side elevation of a modified form of coupling member;

Fig. 9 is a side elevation of a still further modification of my coupling member; and

Fig. 10 is a perspective view of the means which I employ for rotating the coupling members shown in Fig. 9 in either direction to attach it to or detach it from the part to be provided with a lubricant.

Similar characters of reference refer to similar parts throughout the several views.

Referring to the drawings, the reference character 15 indicates the barrel of my improved grease gun or pump which is provided in a wellknown manner with a plunger, not shown, which is reciprocated in the barrel 15 by means of a screwthreaded piston rod 16 which co-acts with a screwthreaded nut 17, the piston 16 being provided with a handle 18. The barrel 15 is provided with ribs or corrugations 15' to insure a firm grip of the hand thereon. A flexible conduit 19, of any suitable and wellknown construction, has one end secured to the discharge outlet 20 of my pump and the other end is provided with a hollow coupling member, indicated in general by the reference character 21. The free end of this coupling member, as shown in Fig. 2, is provided with a

bayonet slot 22, the transverse portion 23 of which is inclined from the inner end of the longitudinal portion of the slot toward the outer end of the coupling member for a purpose which will be referred to later on. The bore of the coupling member is enlarged at 24 to provide an annular shoulder 25. A perforated cup leather or sealing disk 26 is slidably mounted in the annular portion 24 of the bore of the coupling and is urged against the shoulder 25 by means of a coiled spring 27, one end of which abuts against the cup leather or sealing disk 26 and the other end of which abuts against the adjacent end 28 of the conduit 19. This end of the conduit may be soldered or secured in any convenient manner to the coupling member.

Referring to Figs. 3 and 4, the reference character 29 indicates as a whole a second coupling member which co-acts with the coupling member just described. This coupling member is in general tubular in form and is provided at one end with screwthreads 30 for securing it to the part to be lubricated. A pin 31 extends through and projects from the opposite sides of the other end of the tubular member. This end of the tubular member is flanged inwardly, as indicated at 32, to form a valve seat with which the hollow capsule shaped valve 33 co-acts. A spring 34 interposed between the pin 31 and the hollow valve 33 urges the latter against the valve seat 32. My purpose in making the valve 33 hollow is, first, to provide sufficient room for the spring 34 without materially increasing the length of the coupling member, and, second, to provide means which will tend to prevent the spring 34 from buckling or flexing longitudinally when the valve 33 is pushed inwardly to admit the lubricant. My invention contemplates the provision of facets 36 to receive the jaws of a wrench whereby the coupling member may be attached to or detached from the parts to be lubricated.

In Fig. 5 I have shown the coupling members 21 and 29 coupled together. In this position it will be noted that the spring 27 is partially compressed and that the sealing disk 26 is displaced from the annular shoulder 25 by the end of the coupling member 29. When the piston of the gun pump is actuated to force lubricant through the conduit 19 under pressure this pressure will cause the sealing disk 26 to seal the joint between the two coupling members and thus prevent any escape of lubricant over the sides of the coupling member 29. On account of the fact that the transverse portion 23 of the bayonet slot in the coupling member 21 is inclined toward the open end of this coupling member it is necessary in order to detach this coupling member from the coupling member 29 to move it toward the coupling member 29. This movement causes an additional small quantity of lubricant to be forced into the coupling member 29. When the coupling member 21 is then turned to permit the pin 31 to slide in the longitudinal portion of the slot 22 the sealing disk 26 is moved toward the end of this coupling member 29 under the pressure of the spring 34. This causes the sealing disk 26 to move toward the outer end of the coupling member 21 and thereby produces a slight vacuum which causes any grease which might otherwise remain on the outer end of the coupling member 29 or the outer side of the valve 33 to be sucked back behind the sealing disk 26, and thereby prevents any excess of lubricant from remaining on the end of the coupling member 29 or on the outside of the valve.

From the above description it will be seen that I have provided means for conveying a lubricant to the part or parts to be lubricated which not only prevents the loss of lubricant, even though the lubricant may be forced between the bearing surfaces under very high pressure, but also prevents the lubricant from remaining upon exposed portions of the coupling members after these have been uncoupled, and subsequently lost. This feature is of importance where, as I will describe later on, the coupling members are located at readily accessible points and where, in case the parts being lubricated form a part of a motor vehicle or other similar structure, the clothes of the operator are likely to come in contact with these coupling members.

Referring to Fig. 6 in which I have disclosed a portion of a motor vehicle with the body thereof removed, the reference character 37 indicates a bearing in the differential casing which is supplied with lubricant by a conduit 38 connected therewith by a suitable hollow coupling 39. The other end of the conduit 38 is brought forwardly in the vehicle and is secured to either the dash or the instrument board, as may be found convenient, by means of a floor socket 40, shown in detail in Fig. 7, which is secured in place by means of the screws 41 and is provided with an internal screwthread for receiving the screwthreaded portion 30 of a coupling member 29'. This coupling member 29' is similar to that shown in Figs. 3 and 4, except that it is not provided with the facets 36 for receiving the jaws of a wrench. The forward end of the conduit 38 may be soldered or otherwise secured in the socket 40. The reference character 42 indicates another conduit for conducting oil from the coupling member 29' to the transmission housing 43.

While I have illustrated means for conducting lubricant to but two portions of this automobile vehicle it is to be under-

332
Plaintiff's Exhibit No. 40.

262

stood that conduits similar to 38 and 42 may be used for conducting lubricant to any portion of the vehicle which it is desired to lubricate. Furthermore, this feature of my invention is not to be limited to means for lubricating motor vehicles, but is capable of being used for lubricating any apparatus whether the parts to be lubricated are or are not difficult of access.

In Fig. 8 I have shown a modified form of a coupling member to be secured to a part to be lubricated. This coupling member is L shaped and one end thereof is provided with screwthreads 30' and the other end thereof being provided with a pin 31 and a spring-pressed valve or closure 33 similar to that described in connection with Figs. 3 and 4. The purpose of this coupling member is to provide means for connecting the coupling member 21 with a part to be lubricated which would otherwise be difficult of access if provided with a straight coupling member such as that shown in Figs. 3 and 4.

In Fig. 9 I have disclosed a still further modification of my coupling member wherein it is formed from a tubular member 44 of substantially constant diameter which is not provided with means for co-acting with a wrench to attach or detach it to the part to be lubricated. In order to thus attach or detach this member I provide the means illustrated in Fig. 10. This means comprises a sleeve-like member 45 having a bore 46 therein for receiving the tubular member 44 and slots 47 for receiving the ends of the pin 31 of the tubular member 44. The member 45 is provided with facets 48 for co-acting with a wrench or other tool for rotating this sleeve.

While I have described the preferred embodiments of my invention it is to be understood that it is capable of other adaptations and modifications within the scope of the appended claims.

Having thus described my invention what I claim as new and desire to secure by Letters Patent of the United States is:

1. The combination with a hollow coupling member having a pin projecting from one side thereof and a spring-pressed closure, of a pump having a flexible conduit connected with the outlet thereof, a second hollow coupling member secured to the other end of said conduit for receiving the closed end of said first named coupling member and provided with a bayonet slot for receiving said pin, the transverse portion of said slot being inclined from the longitudinal portion thereof toward the outer end of the coupling member, the bore of said coupling member being enlarged to provide a shoulder, a perforated sealing disk slidably mounted in the enlarged portion of said bore, and a spring confined between the ends of said conduit and said disk for urging said disk against said first named coupling member.

2. The combination with a hollow coupling member having a pin projecting from one side thereof and a spring-pressed closure, of a pump, a discharge conduit having one end secured to the outlet of said pump, a second hollow coupling member for receiving the closed end of said first named coupling member secured to the other end of said conduit and provided with a bayonet slot adapted to co-act with said pin, a perforated sealing disk mounted to reciprocate in the bore of said coupling member, means for yieldingly urging said sealing disk against the closed end of said first named coupling member, and means for limiting the movement of said sealing disk in the direction of said second coupling member.

3. The combination with a hollow coupling member having a spring-pressed closure, of a pump, a discharge conduit having one end secured to the outlet of said pump, a second hollow coupling member for receiving the closed end of said first named coupling member secured to the other end of said conduit, a perforated sealing disk mounted to reciprocate in the bore of said coupling member, means for yieldingly urging said sealing disk against the closed end of said first named coupling member, and means for limiting the movement of said sealing disk toward said second coupling member.

4. The combination with a hollow coupling member having a spring-pressed closure, of a pump, a discharge conduit having one end secured to the outlet of said pump, a second hollow coupling member for receiving the closed end of said first named coupling member secured to the other end of said conduit, a perforated sealing disk mounted to reciprocate in the bore of said coupling member, and means for yieldingly urging said sealing disk against the closed end of said first named coupling member.

5. The combination with a pump having a flexible conduit connected with the outlet thereof, of a hollow coupling member secured to the other end of said conduit and provided with a bayonet slot, the transverse portion of said slot being inclined from the longitudinal portion thereof toward the outer end of the coupling member, the bore of said coupling member being enlarged to provide a shoulder, a perforated sealing disk slidably mounted in the enlarged portion of said bore, and a spring confined between the ends of said conduit and said disk for urging said disk toward said shoulder.

6. The combination with a pump having a discharge outlet, of a coupling member connected with said discharge outlet and provided with a bayonet slot, the transverse

portion of said slot being inclined from the inner end of the longitudinal portion thereof toward the outer end of said coupling member, a perforated sealing disk slidably mounted in the bore of said coupling member, and means for yieldingly urging said sealing disk toward the outer end of said coupling member, and means for limiting the movement of said sealing disk toward the outer end.

7. The combination with means for supplying lubricant under pressure, said means comprising a discharge outlet, of a coupling member connected with said discharge outlet, a perforated cup leather slidably mounted in said coupling member, and means for yieldingly urging said cup leather toward the outer end of said coupling member.

8. The combination with an apparatus having a part to be lubricated, of a conduit for conducting lubricant to said part, a coupling member secured to the end of said conduit and provided with a spring-pressed valve closure, means for supplying lubricant to said conduit comprising a receptacle provided with a discharge outlet, a second coupling member connected with said discharge outlet, means for detachably uniting said coupling members, and means for sealing the joint between said coupling member and for removing excess lubricant from the adjacent ends thereof when said coupling members are uncoupled.

9. The combination with an apparatus having a part to be lubricated, of a conduit for conducting lubricant to said part, a coupling member secured to the end of said conduit and provided with means for supplying lubricant to said conduit comprising a receptacle provided with a discharge outlet, a second coupling member connected with said discharge outlet, means for detachably uniting said coupling members, and a pliable gasket for sealing the joint between said coupling members.

10. The combination with an apparatus having a part to be lubricated, of a conduit for conducting lubricant to said part, a coupling member secured to the end of said conduit and provided with means for supplying lubricant to said conduit comprising a receptacle provided with a discharge outlet, a second coupling member connected with said discharge outlet, and means for detachably uniting said coupling members and for removing excess lubricant from the adjacent ends thereof when said coupling members are uncoupled.

11. The combination with a bearing provided with a member for receiving lubricant, of means for supplying lubricant thereto comprising a hollow member, means for supplying lubricant to said hollow member under pressure, means for detachably connecting said members, and means for sealing said connection comprising a gasket positioned between said members and held against one of said members by the pressure of the lubricant.

12. The combination with a bearing provided with a member for receiving lubricant, of means for supplying lubricant thereto comprising a hollow member, means for supplying lubricant to said hollow member under pressure, means for detachably connecting said members, means for sealing said connection comprising a gasket positioned between said members and held against one of said members by the pressure of the lubricant, and a spring for initially positioning said gasket against said member.

13. The combination with a receptacle for receiving lubricant, of means for supplying lubricant to said receptacle comprising a hollow member, means for forcing lubricant into said hollow member under pressure, and means for connecting said hollow member to said receptacle in fluid-tight relation comprising a pliable member positioned in said hollow member and having one face for contacting with said receptacle, the other face of said pliable member being subjected to the pressure of the lubricant in said hollow member.

14. The combination with a grease cup comprising a tubular member having one end flanged inwardly to provide a closure seat, a closure, a pin extending through said tubular member and from both sides thereof, and a spring confined between said pin and closure, and tending to hold said closure on its seat, of a grease pump having a discharge conduit, and means co-acting with the ends of said pin for detachably connecting the discharge end of said conduit with said grease pump.

15. The combination with a grease cup comprising a tubular member having a closure seat, a closure, a pin extending through said tubular member and from both sides thereof, and a spring confined between said pin and closure, and tending to hold said closure on its seat, of a grease pump having a discharge conduit, and means co-acting with the ends of said pin for detachably connecting the discharge end of said conduit with said grease cup.

16. The combination with a grease gun having a discharge conduit, of means for connecting said conduit with a bearing comprising a tubular member, co-acting means on said conduit and said tubular member for detachably connecting said conduit and tubular members, and a flexible member for sealing the joint between said conduit and said tubular member, said flexible member having an aperture for the passage of lu-

Plaintiff's Exhibit No. 13

lubricant from said conduit to said tubular member, a portion of one face of said flexible member being positioned so as to be subjected to any pressure created in said conduit to force it against said tubular member.

17. The combination with means for supplying lubricant under pressure comprising a discharge member of means for connecting said discharge member to a bearing comprising a tubular member and means for detachably connecting said members in sealed relation comprising means subjected to the pressure created in said members, the said means being positioned between said members and held against one of said members by said pressure.

18. The combination with a member for receiving lubricant, of means for supplying lubricant thereto under pressure comprising a tubular member, means for detachably connecting said tubular member to said lubricant-receiving member in sealed relation comprising a flexible member provided with an aperture for the passage of lubricant, one face of said member being subjected to the pressure of the lubricant.

In witness whereof I hereunto subscribe my name this 14th day of December, 1918.

ARTHUR V. GULLBORG.

Witnesses:
JOHN E. CARLSON,
JOHN L. STEPPER.

DISCLAIMER.

1,307,784.—*Arthur V. Gullborg*, Chicago, Ill. LUBRICATING MEANS. Patent dated June 24, 1919. Disclaimer filed August 29, 1927, by the said inventor by mesne assignments, *The Bassick Manufacturing Company*.

Hereby enters this disclaimer to that part of the claims in said specification which is in the following words, to wit:

"12. The combination with a bearing provided with a member for receiving lubricant, of means for supplying lubricant thereto comprising a hollow member, means for supplying lubricant to said hollow member under pressure, means for detachably connecting said members, means for sealing said connection comprising a gasket positioned between said members and held against one of said members by the pressure of the lubricant, and a spring for initially positioning said gasket against said member."

[*Official Gazette September 13, 1927.*]

335

Plaintiff's Exhibit No. 40.

130774

421

1918

CONTI

1. *Application* _____ *papers.*
2. [illegible]
3. Amendment a MAR 10 1919
4. Amendment a MAR 20 1919
5. Amendment Rule 78 MAY 5- 1919
6. Notice of entry of Amendment May 14
7. Power & Deputy 6-2-19
8. Ex'd & Amended JUN 12 1919

10

336

Plaintiff's Exhibit No. 40.

184 LUBRICATION

Serial No. 2[illegible] Div. Sheets

A. V. GULLBORG.

LUBRICATING MEANS.

APPLICATION FILED DEC. 21, 1918.

1,307,734.

Patented June 24, 1919

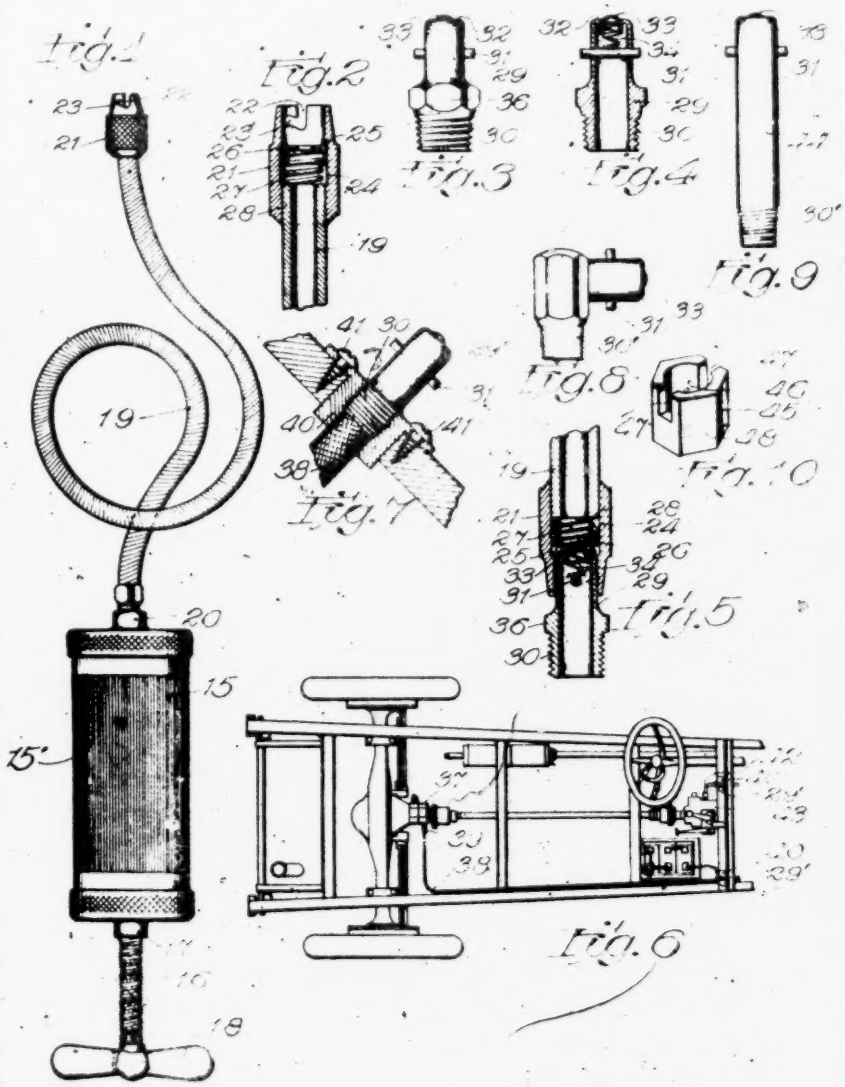

Witnesses:
Andrew Nintercom
Earl F. Purce

Inventor
Arthur V. Gullborg
Williams, Bradbury & Lee
Attys.

Plaintiff's Exhibit No. 41.
337

REX DUPLEX HIGH PRESSURE GUN

IS adaptable to all lubricating systems and connectors; equipped with REX DUPLEX 10,000 lb. Pressure Hose, with coupler complete, automatic self feeding. The REX Hand Gun will develop 7000 lbs. pressure, capacity $1\frac{1}{4}$ lbs.

No sheering of pins or need of pliers to release coupler when under pressure. REX coupler will not pull off under pressure. REX gun and hose are guaranteed against leakage. Sold complete or in separate units as required.

FULTON BUILDING. **REX DUPLEX FITTING COMPANY** PITTSBURGH, PA.

338

Plaintiff's Exhibit No. 12

REX DUPLEX HIGH PRESSURE

GREASE HAND GUN

7,000 LB. PRESSURE

GOOD BY AIR POCKETS

#1 - BYPASS CHECK
The Bypass Check at the top of the pressure chamber eliminates any possible chance of grease bypassing under pressure.

#2 - COMPRESSION SPRING
The compression spring in the storage chamber insures a constant flow of grease into the pressure chamber as the grease is dispensed.

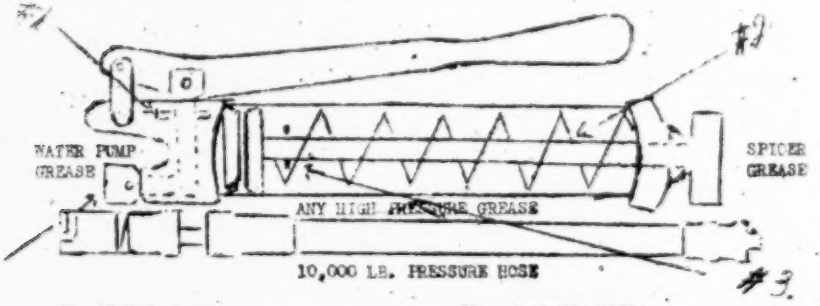

#4 - CHECK VALVE
The check valve will hold the pressure in the hose and prevents grease or air returning into the pressure chamber from the hose.

#3 - SLOT PIN LOCK
The slot pin lock is located at the base of the piston handle, which will lock the piston at the pull back position after filling the grease chamber, while the operator fastens the head of the chamber tube.

GENERAL SPECIFICATIONS

The Rex Duplex High Pressure Hand Gun will develop 7,000 Lb. pressure with a capacity of 1½ Lbs. The main storage tube has a high nickel finish with a four and one-half inch knearled section. The malleable fittings are finished in aluminum. The lever handle top is finished in red. Each complete gun and hose is packed in an individual strong carton, convenient for express or parcel post shipping. An instruction tag is attached to each gun with full detailed instructions for filling and operating.

A Rex 10,000 Lb. High Pressure Grease Hose with a Rex Duplex Coupler complete is supplied with each unit, which is adaptable to all lubricating systems and connections. No shearing of pins or need of pliers to release coupler when under pressure. Rex Coupler will not pull off under pressure. Rex Gun and Hose are guaranteed against leakage. Sold complete or in separate units, as required. PRICE.....$10.50 each.

REX DUPLEX FITTING SALES CO.
Fulton Building Pittsburgh, Penna.

Plaintiff's Exhibit No. 45.

Plf's Ex # 45
11/3/33 HC

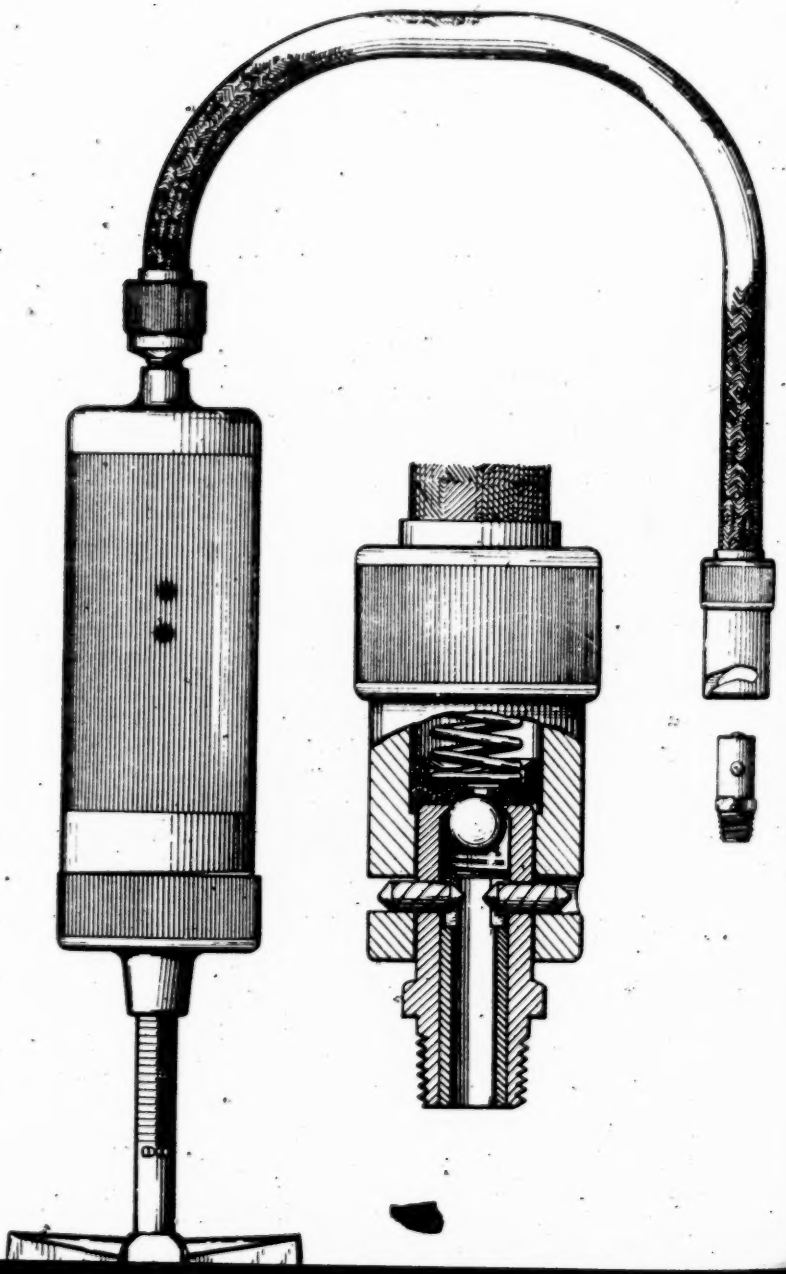

Defendants' Ex B
11/2/33 H.C.J.

EXHIBIT 1.

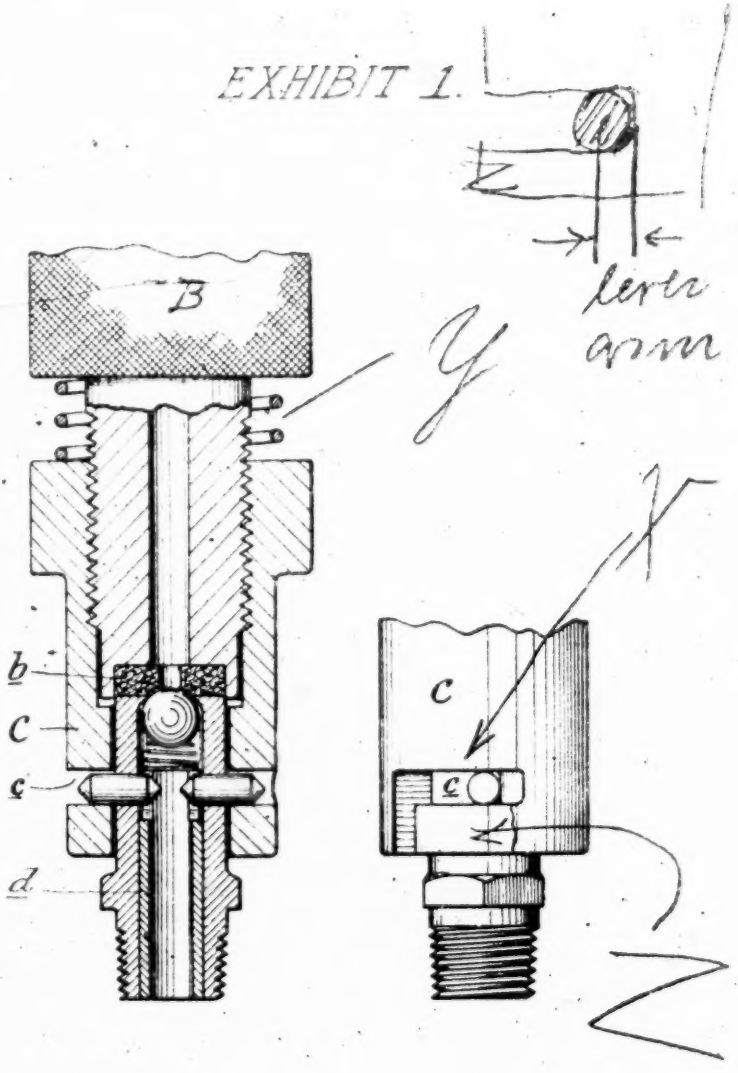

Defendants Ex "C"
1/2/33 H C T

EXHIBIT. 2.

Fig.5.

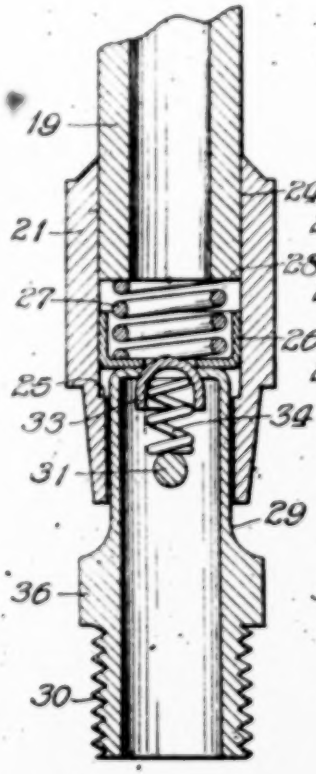

Fig.5a.
UNDER PRESSURE

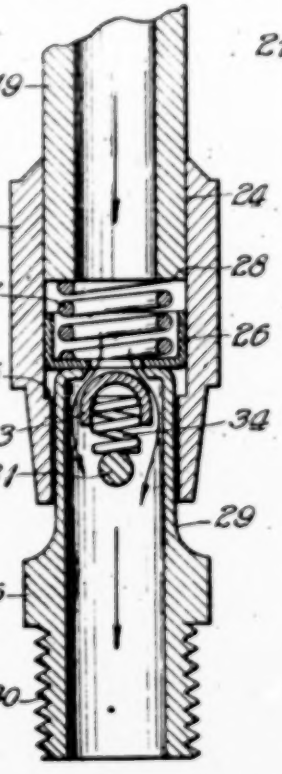

Fig.5

COUPLER DETA
FROM FITTI

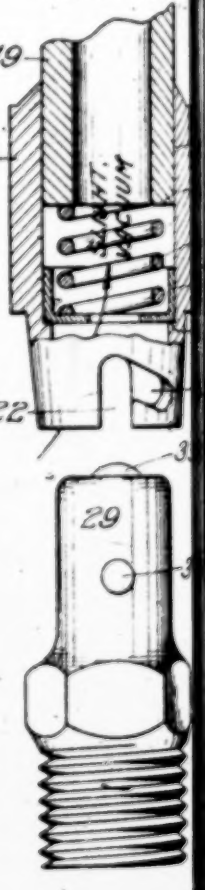

342
Defendants' Exhibit D.

Defendant's Exhibit D
4/3/13 MCT

RÉPUBLIQUE FRANÇAISE

OFFICE NATIONAL DE LA PROPRIÉTÉ INDUSTRIELLE

BREVET D'INVENTION

V. . . Machines.

3. . . Organes, accessoires et extraction des machines

N° 468.869

Dispositif de raccord instantané pour fluides sous pression et application du dit raccord pour le graissage sous pression.

M. Camille SEMG résidant en France (Aube).

Demandé le 24 février 1914, à 11h 55m, à Paris.
Délivré le 5 mai 1914. — Publié le 18 juillet 1914.

La présente invention a pour objet un dispositif de raccord instantané pour fluides sous pression, lequel se caractérise essentiellement en ce que les deux parties de l'accouplement sont solidarisées ou séparées l'une de l'autre par le déplacement longitudinal, sur l'une des dites parties, d'une douille de manœuvre destinée à actionner des leviers, griffes ou autres organes d'assemblage, ces organes venant ou non en prise avec l'autre partie de l'accouplement qui possède, dans ce but, un bourrelet d'engagement ou autre moyen équivalent. Plus particulièrement, le raccord peut être constitué par un corps possédant un chambrage à l'intérieur duquel peut être introduite l'autre partie de l'accouplement qui s'appuie sur une garniture élastique assurant l'étanchéité du joint. La liaison s'opère au moyen de griffes ou analogue dans le chambrage et qui sont articulées dans des fentes du raccord, les dites griffes étant prolongées au-delà de leur articulation par des bras rainurés qui pénètrent dans des fentes de la douille de manœuvre et sont entraînées par cette dernière au moyen d'axes pénétrant dans les rainures des dits bras.

Ce système de raccord instantané trouve plus particulièrement son application dans le cas où il s'agit de réaliser un graissage sous pression au moyen d'huile, de graisse consistante, etc. Dans ce cas, le raccord, qui est réuni au tuyau du mécanisme de refoulement: pompe ou autre, peut être fixé à volonté, par la manœuvre de la douille entraînant les griffes, sur le bourrelet d'accrochage dont le graisseur doit être muni dans ce but. Ce bourrelet peut être formé sur un chapeau qui forme le graisseur et qui comporte une ouverture constituant un siège pour un obturateur soumis à l'action d'un ressort intérieur.

Sur les dessins annexés et à titre d'exemple:

La fig. 1 représente, partie en élévation, partie en coupe verticale, une forme de réalisation du dispositif de raccord instantané faisant l'objet de l'invention.

La fig. 2 en est une coupe correspondante en plan.

Les fig. 3 et 4 montent respectivement en coupe verticale suivant XY et en plan une forme de réalisation d'un graisseur à bille, qui a été plus particulièrement étudié pour se combiner avec le dispositif de raccord instantané, dans le cas de graissage sous pression.

Le dispositif de raccord instantané se compose de deux parties principales: d'une part, un corps *a*, d'autre part une douille de manœuvre *b* susceptible de coulisser sur le corps *a*.

Le corps *a*, qui constitue une sorte de cuvette destinée à recevoir l'organe sur lequel le

3712

raccord doit être fixé, porte dans le rebord définissant la dite cuvette un certain nombre de fentes recevant respectivement des leviers c^1, c^2, c^3 formant griffes. Ces leviers c^1, c^2, c^3 sont articulés sur le corps *a*, au moyen d'un fil *f* se logeant dans une gorge convenablement disposée à cet effet. Les leviers X pénètrent également dans des fentes correspondantes ménagées dans la douille *b*, qui peut être déplacée longitudinalement par rapport au corps *a*. Chaque levier est pourvu d'un bec d'accrochage faisant saillie dans la cuvette du corps *a* et constitue, par son autre bras, une fourche de manœuvre. Les fourches de manœuvre sont solidarisées par un fil *e* disposé dans une gorge de la douille déplaçable *b*. Cette dernière porte également, dans une gorge, un autre fil *g* qui peut venir, lors de ses déplacements dans un sens ou dans l'autre, s'engager dans des rainures *k* ménagées sur le corps *a*, ce qui l'immobilise dans les positions extrêmes qu'elle peut ainsi occuper. Un fil *h* sert en outre de butée.

Un anneau de caoutchouc *i* est disposé au fond de la cuvette et sert d'appui à l'organe à accoupler G, les griffes c^1, c^2, c^3 agissant pour l'appliquer sur le dit anneau *i* qui se comprime et forme ainsi joint étanche.

On voit que dans la position (fig. 1), la douille *b* étant repoussée sur le corps *a* et vers l'organe à accoupler G, les griffes c^1, c^2, c^3 font saillie à l'intérieur du corps *a* et, prenant appui sur le bourrelet *d* de l'autre partie de l'accouplement G, l'appliquent sur l'anneau interne de caoutchouc *i*. On remarque que toute traction opérée sur le corps *a* ne peut en aucun cas provoquer le désaccouplement.

Au contraire, en attirant la douille *b*, le fil *e* appartenant à cette dernière bascule les leviers c^1, c^2, c^3 et permet le dégagement de l'organe G précédemment accouplé; la douille *b* étant immobilisée en cette position par l'engagement du fil *g* dans la gorge correspondante *k*.

Ce dispositif de raccord instantané, qui peut être utilisé pour assurer la jonction de deux canalisations où circule tout fluide et, en particulier, tout fluide sous pression, peut être particulièrement utilisé quand il s'agit de réaliser un graissage sous pression par de l'huile ou de la graisse consistante. Dans ce but, on peut avoir recours à un dispositif de graisseur à bille formant obturateur et comportant un bourrelet extérieur pour l'accrochage et la fixation du raccord. (fig. 1 et 2).

Comme on le voit en fig. 3, 4, ce graisseur est constitué par un corps chambré A, percé d'un canal D formant conduit pour le lubrifiant. Un prolongement fileté permet la mise en place du graisseur. Dans le chambrage, qui est fileté intérieurement, se visse un bouchon B portant le bourrelet sur lequel se fixent les griffes c^1, c^2, c^3 du raccord (fig. 1, 2), pour réaliser l'accouplement avec la pompe destinée à refouler le lubrifiant. Dans l'exemple représenté, le bouchon B est, en outre, évidé intérieurement pour recevoir une bille *c*, qu'un ressort interne R pousse constamment pour assurer la fermeture du graisseur.

Résumé :

1° Raccord instantané, caractérisé en ce que les deux parties de l'accouplement sont solidarisées ou séparées l'une de l'autre par le simple déplacement longitudinal, sur l'une des dites parties, d'une douille de manœuvre; cette dernière déterminant la manœuvre de leviers, griffes ou autres organes de fixation qui appartiennent à la partie correspondante de l'accouplement et qui font ainsi saillie ou non à l'intérieur de cette dernière, pour assujettir ou libérer l'autre partie qui y est engagée.

2° Forme de réalisation du raccord instantané spécifié en 1°, caractérisé en ce que dans des fentes d'un corps chambré comportant intérieurement un anneau de joint et d'étanchéité, sont disposés des leviers ou griffes articulés, se prolongeant par des bras en forme de fourche; ces leviers étant déplacés de manière à ce que leurs nez fassent ou non saillie dans le chambrage, pour prendre appui sur ou libérer le bourrelet appartenant à l'autre partie de l'accouplement, lorsqu'on déplace longitudinalement une douille coulissante sur le corps; cette douille présentant des fentes pour les leviers ou griffes et portant un dispositif d'entraînement pénétrant dans les bras rainurés de ces derniers.

3° Application du raccord spécifié en 1° ou 2°, plus particulièrement dans le cas de graissage sous pression, caractérisée en ce que le raccord qui dépend, par exemple, d'un tuyau

ORGANES, ACCESSOIRES, ETC. [468,869] 3

de refoulement d'une pompe, se fixe ou se sépare à volonté du graisseur qui comporte, dans ce but, une bourrelet ou autre moyen d'accrochage se conjugnant avec les griffes ou leviers de fixation; le bourrelet de fixation appartenant à un bouchon qui ferme le corps du graisseur et dont l'ouverture forme siège pour un obturateur : bille ou clapet, soumis à l'action d'un ressort interne.

CAMILLE SEAG.

345

Defendants' Exhibit D.

Defts ex p 3

N° 468.869 M. Seng Pl. unique

Fig. 1.

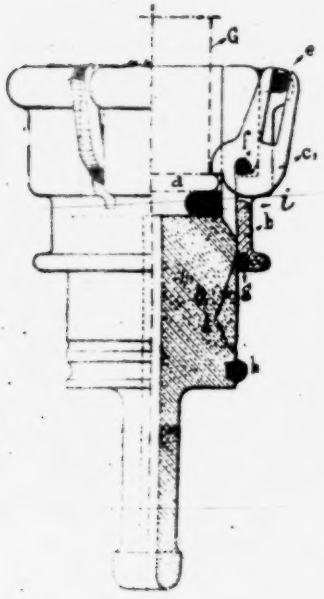

Fig. 5.

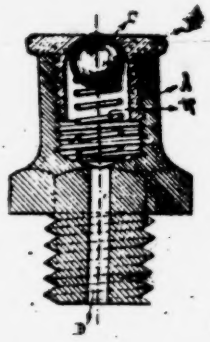

Fig. 4.

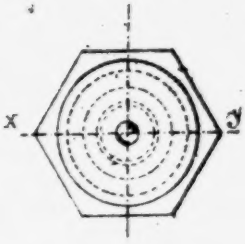

Fig. 2.

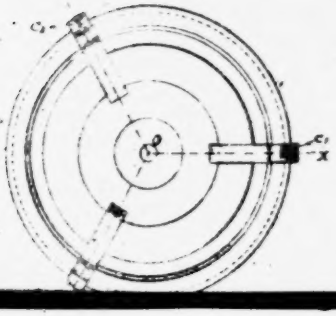

[fol. 346] Clerk's Certificate to foregoing transcript omitted in printing.

Endorsed on cover: File No. 39,534. U. S. Circuit Court of Appeals, Third Circuit. Term No. 31. G. S. Rogers, doing business as Rex Duplex Fitting Company and R. W. Dusenberry, Petitioners, vs. Alemite Corporation. Petition for a writ of certiorari and exhibit thereto. Filed April 24, 1935. File No. 31, O. T., 1935.

FILE COPY

Office Supreme Court, U. S.
FILED
APR 24 1935

IN THE

Supreme Court of the United States

No. [illegible] 31 October Term, 1934.

G. S. ROGERS, doing business as REX DUPLEX FITTING COMPANY, and R. W. DUSENBERRY,

Petitioners,

v.

ALEMITE CORPORATION,

Respondent.

PETITION FOR WRIT OF CERTIORARI.

CHARLES M. CLARKE,
W. G. DOOLITTLE,
JAMES ROY VAN KIRK,
Pittsburgh, Pa.,
LEONARD L. KALISH,
Philadelphia, Pa.,
Counsel for Petitioners.

I. F. Huntzinger Co., *Appellate Printers*, Camden, N. J.

INDEX

	PAGE
Petition for Writ of Certiorari	1
Summary and Short Statement of Matter Involved	2
The Disclosure of the Patent in Suit	2
The "Grease-Gun"	3
The "Grease-Cup"	3
The Claims of the Patent in Suit	4
Hose-coupler not claimed	4
Grease-gun not claimed	4
Grease-cup not claimed	4
The two groups of "combination" claims, to wit, the "suction-effect" claims 1, 2, 3, 4 and 8 and the pin-fitting claims 14 and 15	5
Defendants' accused devices	6
Defendants' admittedly old and unpatented "non-suctional" grease-guns	6
Defendants' admittedly old and unpatented bayonet-type grease-cup or pin-fittings	6
The Charges of Infringement	7
The alleged contributory infringement of the "suction-effect" claims 1, 2, 3, 4 and 8	8
The alleged contributory infringement of the "pin-fitting" claims 14 and 15	8
The Commercial Situation	9
Reasons relied upon for the allowing of the writ of certiorari	12
Brief in support of petition for writ of certiorari	15
Opinions of the courts below	15
Jurisdiction	15
Statement	16
Statutes	16
Specification of Errors	17
Summary of Argument	19
Argument—Point I	19
Point II	20
Point III	22
Point IV	26
Conclusion	32

CASES CITED.

PAGE

Adams v. Bassick, 285 U. S. 531 31
Alemite v. Lubrair, 62 Fed. 2d, 899 (CCA 1)....11, 13, 16, 27, 30, 31
Alemite v. Rogers & Dusenberry (the case at bar) 5 Fed. Sup. 940 (D. C., W. D. Pa.) 15
Alexander Milburn Co. v. Davis-Bournonville, 270 U. S. 390 16
Bassick v. Adams, 52 Fed. 2d, 36 (CCA 2) 12, 31
Carbice Corp. of America v. American Patents Development Corp., 283 U. S. 27 .....13, 14, 16
Concrete Appliance Co. v. Gonery, 269 U. S. 177.... 16
Edison Electric Light v. Peninsular L. P. H. Co., 101 Fed. 831 (CCA 6) 13, 20
General Electric v. Ohio Brass Co., 277 Fed. 917 (CCA 3) 13, 20
Gypsy Oil Co. v. Escoe, 275 U. S. 498 16
Hollingshead v. Bassick, 73 Fed. 2d, 543 (CCA 6) 11, 12, 13, 16, 27, 29, 31
I. T. S. Co. v. Essex, 272 U. S. 429..... 16
Lord, et al., v. Radio Corp. of America, 28 Fed. 2d, 257 (CCA 3) 24, 31
Lyman, et al., v. Bassick, 18 Fed. 2d, 29 (CCA 6) 9, 11, 13, 16, 27, 28, 29, 30
Morgan Envelope Co. v. Albany Paper Co., 152 U. S. 425 26
Radio Corp. of America v. Lord, 278 U. S. 648..... 24
Rogers & Dusenberry v. Alemite (the case at bar) 74 Fed. 2d, 1019 (CCA 3)..... 15
Thomson-Houston Electric v. Illinois Tel. Constr. Co., 152 Fed. 631 (CCA 7) 13, 20
United Shoe Machinery Corp. v. United States, 252 U. S. 451, 465. 30

STATUTES:

Revised Statutes of United States, Section 4886..... 16
Section 3 of Act of October 15, 1914, 38 Stat. L. 731, known as the Clayton Act..... 17

IN THE

SUPREME COURT OF THE UNITED STATES

No. October Term, 1934.

G. S. Rogers, doing business as Rex Duplex Fitting Company, and R. W. Dusenberry
Petitioners,

v.

Alemite Corporation,
Respondent.

PETITION FOR WRIT OF CERTIORARI.

To the Honorable, the Chief Justice and Associate Justices of the Supreme Court of the United States:

Your petitioners, G. S. Rogers (doing business as Rex Duplex Fitting Company), and R. W. Dusenberry, pray for a writ of certiorari to the United States Circuit Court of Appeals for the Third Circuit, to review a judgment of that Court entered December 18, 1934, and in which a petition for rehearing was denied on January 25, 1935.

A transcript of the record in the case, including the proceedings in said Circuit Court of Appeals, is furnished herewith in accordance with Rule 38 of the Rules of this Court.

SUMMARY AND SHORT STATEMENT OF MATTER INVOLVED.

The present suit was brought in the United States District Court in and for the Western District of Pennsylvania, by the Alemite Corporation, as plaintiff, against G. S. Rogers (doing business as Rex Duplex Fitting Company) and R. W. Dusenberry, and R. H. Kidd,* as defendants, on Gullborg Patent No. 1,307,734 (granted June 24, 1919), based upon **two** separate and distinct, and specifically **different** charges of *contributory* infringement;—both charges of contributory infringement predicated however upon generically similar factual situations and upon the **same legal contention.**

The Disclosure of the Patent in Suit.

The patent in suit (No. 1,307,734) discloses **two** separate and distinct mechanical devices each having* a separate and independent status in the art of lubrication, and the two devices having been* customarily used in conjunction with each other; the relationship between these two devices being merely that each device constitutes the (broadly) old environment in which the other device is customarily used (much the same as an incandescent electric bulb or lamp is used with an electric socket, or an electric socket used with an electric bulb).

---

* R. H. Kidd withdrew as a defendant prior to trial; and upon order of Court the bill of complaint was taken **pro confesso** against him. For this reason, the final decree of the District Court (R., p. 184) does not include said R. H. Kidd, and said R. H. Kidd took no part in the appeal to the Circuit Court of Appeals.

* At all times prior to the application for the patent in suit.

The Two Devices of the Patent in Suit.

The "Grease-Gun" 1) On one hand, the patent in suit discloses a broadly **old** lubricant-dispensing device, sometimes generally referred to as a "grease-gun," comprising an **old** pump (or compressor), an **old** hose and an **old** "bayonet" type hose-coupler on the end of the hose; whereby temporary and quick-detachable connection may be made between the end of the grease-gun hose and any one of a plurality of **old** or new "bayonet" type grease-cups (or "pin-fittings") on an automobile or other machine, or on many automobiles or machines;—the otherwise **old** "bayonet" type hose-coupler of the patent in suit having certain allegedly new and useful details of construction whereby a slight vacuum or suction is claimed to be produced within the coupler at the instant of disunion from **any** "bayonet" type grease-cup or "pin-fitting," and which alleged "suction-effect" is supposed to be conducive to greater cleanliness in the use of the grease-gun by sucking back into the hose-coupler any slight excess of grease that may otherwise exude or drip out at the instant of disunion.

The "Grease-Cup" 2) On the other hand, the patent in suit discloses a broadly **old** and unpatented "bayonet" type grease-cup or so-called "pin-fitting," comprising a small tubular body and having bayonet lugs or a bayonet-pin projecting from its two sides for the reception of **any old** or new "bayonet" type hose-coupler of **any old** or new grease-gun, and having a spring-pressed check valve or closure valve;—the asserted novelty of this "bayonet" type grease-cup or "pin-fitting" being the specific disposition of the valve-closing spring between the closure-valve and the bayonet-pin (which latter extends through the tubular body of the grease-cup) whereby the bayonet-pin

may not only serve its normal function as a bayonet-pin, but may also at the same time act as a spring abutment on the inside of the grease-cup for giving support to the valve-closing spring. The grease-cup or "pin-fitting," of the patent in suit constitutes, per se, the subject-matter of plaintiff's earlier-filed Patent No. 1,307,733 **not** in suit (R., pp. 245-247), which contains claims addressed to precisely this asserted novelty of plaintiff's grease-cup or "pin-fitting" invention.

The Claims of the Patent in Suit.

Hose-Coupler **not** claimed.

The patent in suit does **not** claim the so-called "suction-effect" hose-coupler, per se, because even the specific structural features or elements in the coupler (which give rise to this alleged "suction-effect") were admittedly old in bayonet type hose-couplers per se, and because the asserted utility and novelty of this "suction-effect" was in an alleged "combination" of that hose-coupler with a grease pump, a hose, and a grease-cup.

Grease-gun **not** claimed.

The patent in suit likewise does **not** claim what may be termed a "suction-effect" grease-gun, that is, a grease-gun comprising the old pump, the old hose and the "suction-effect," hose-coupler (the pump, hose and coupler being sometimes referred to as the "grease-gun").

Grease-cup **not** claimed.

The patent in suit does **not** claim the grease-cup or "pin-fitting" per se, because plaintiff, apparently recognizing the separate and independent status of grease-guns on one hand and grease-cups on the other hand, took out a

separate and independent Patent No. 1,307,733 (**not** in issue) claiming this grease-cup or pin-fitting, per se, with its alleged novel disposition of the valve-closing spring between the valve-closure and the bayonet-pin.

The alleged "combination" claimed.

All the claims of the patent in suit declared upon (as well as those not in issue) recite in each instance, an alleged "combination" of the **four** separate and distinct mechanical devices which have always* been used in conjunction with each other for the lubrication of machinery, to wit: (1) a pump; (2) a hose; (3) a hose-coupler; and (4) a grease-cup.†

The claims of the patent in suit declared upon are divisible into two groups, to wit:

1. Claims 1, 2, 3, 4 and 8 reciting in detail plaintiff's specific "suction-effect" hose-coupler in "combination" with **any** (old or new) pump, hose, and grease-cup (the pump, hose and grease-cup being merely generically defined in these claims)

and

2. Claims 14 and 15 reciting in detail plaintiff's specific internal construction in "bayonet" type grease-cups (which is claimed, per se, in plaintiff's "pin-fitting" Patent No. 1,307,733 not in suit), in "combination" with **any** (old or new) pump, hose and bayonet type hose-coupler (the pump, hose and hose-coupler being merely generically defined in these claims).

---

* Long prior to the filing of the application for the patent in suit.

† Some of the claims, such as Claim 8, for instance, also generically recite (in "combination") the apparatus to be lubricated, as, for instance, the automobile or other machine.

DEFENDANTS' ACCUSED DEVICES.

Defendants manufactured and sold **two** separate and distinct **devices,** each having a separate and independent status in the art of lubrication, to wit:

1) admittedly **old** and **un**patented lubricant-dispensing pumps or so-called "grease-guns," having admittedly **old** and **un**patented "bayonet" type hose-couplers at the free ends of their discharge hoses,

adapted to be connected onto and to force lubricant into any **old** and **un**patented "bayonet" type grease-cups or so-called "pin-fittings," as, for instance, defendants' (and others') **old** and **un**patented grease-cups or "pin-fittings" referred to in sub-section 2 hereinbelow,

or

adapted to be connected onto (and to force lubricant into) any alleged new and patented grease-cups or "pin-fittings" such as plaintiff's "pin-fittings" disclosed (but not claimed) in its patent in suit and claimed (per se) in its other Gullborg Patent No. 1,307,733, **not** in suit.

2) admittedly old and unpatented grease-cups having "bayonet" lugs or "pins" projecting from its sides, for coupling engagement

by any **old** and **un**patented "bayonet" type hose-coupler part of any old and unpatented lubricant-dispensing pump or "grease-gun," as, for instance, defendants' (and others') **old** and **un**patented "grease-guns" referred to in sub-section 1 hereinabove,

or

by any allegedly new, improved and patentable

"bayonet" type hose-coupler part of an old grease-gun, such as plaintiff's so-called "suction-effect" bayonet hose-couplers of the patent-in-suit, with which plaintiff's admittedly **old** grease pumps are equipped.

THE CHARGES OF INFRINGEMENT.

Plaintiff has **not** charged **any*** infringement of its "suction-effect" claims or its coupler-defining claims (1, 2, 3, 4, and 8), either by reason of defendants' grease-gun (which may be regarded as comprising a pump, hose, and hose-coupler), or by reason of defendants' hose-coupler per se;—plaintiff thereby conceding the fact that neither defendants' "grease-guns" nor the defendants' hose-coupler, per se, has the so-called "suction-effect" or the structural features allegedly giving rise to such "suctional-effect," and that defendants' grease-gun is admittedly what in this litigation may be termed as the old "**non**suctioned-effect" type or kind of grease-gun.

Plaintiff has likewise **not** charged **any*** infringement of its "pin-fitting" claims or "pin-fitting" defining claims (14 and 15), by reason of defendants' manufacture and sale of the accused "pin-fittings";—plaintiff thereby conceding that defendants' "pin-fitting" is devoid of the structural features which are specifically recited in the "pin-fitting" defining *portions* of these claims (14 and 15).

Each of the **two** separate and distinct charges of infringement in this suit are charges of *contributory* infringement (as distinguished from direct infringement):

---

* Either direct infringement or contributory infringement.

* Either direct infringement or contributory infringement.

1. *Contributory* infringement of the "suction-effect" claims (1, 2, 3, 4, and 8) is charged by reason of defendants' manufacture and sale of their **old** and **un**patented grease-cups or "pin-fittings," upon the assertion that the same are adapted and intended to have attached to them and to have lubricant forced into them by, *inter alia,* plaintiff's "suction-effect" grease-guns, that is, having the so-called "suction-effect" hose-coupler, specifically defined by these claims in "combination" with **any old** grease pump, hose, and **any old** bayonet type grease-cup or "pin-fitting";—and notwithstanding that defendants' accused (old and unpatented) grease-cups or "pin-fittings" are also adapted and intended to have attached to them and to have lubricant forced into them by "**non**suction-effect" hose-couplers or "**non**suction-effect" grease-guns manufactured and sold by defendants (and others).

2. *Contributory* infringement of the "pin-fitting" claims (14 and 15) is charged by reason of defendants' manufacture and sale of their **old** and **un**patented ("**non**suctional") grease-guns, upon the assertion that the same are adapted and intended to be connected onto and to force lubricant into (*inter alia*), plaintiff's grease-cups or "pin-fittings" defined in detail in these claims;—and notwithstanding that defendants' accused **old** and **un**patented grease-guns are also adapted and intended to be connected onto and to force lubricant into other non-infringing "pin-fittings" manufactured and sold by defendants (and others).

THE COMMERCIAL SITUATION.

Pin-fittings on one hand and grease-guns on the other hand (the latter comprising a pump, a hose and a hose-coupler) were old in the art, as was the combination of pin-fitting and grease-gun (see *Lyman, et al., v. Bassick,* 18 Fed. (2d) 29 CCA 6th, involving the patent here in suit).

The specific pin-fittings defined in detail in claims 14 and 15 of the patent in suit were manufactured and widely distributed by plaintiff under its other Gullborg Patent No. 1,307,733 (not in suit). At the time of trial, more than 544,000,000 of the patented pin-fittings had been sold by plaintiff (R., p. 27).

The only purpose of plaintiff's pin-fittings (just as the pin-fittings of defendants and others) is to have a grease-gun attached to them from time to time (by means of a "bayonet" type hose-coupler) so that grease may be forced into the pin-fitting from time to time.

Without a grease-gun the pin-fitting is useless.

The specific "suction-effect" grease-guns defined in detail in claims 1, 2, 3, 4 and 8 of the patent in suit were manufactured and widely distributed by plaintiff under its patent in suit. At the time of trial, more than 17,000,000 of such alleged "suction-effect" grease-guns had been manufactured and distributed by plaintiff, and were in use largely in the hands of public greasing stations and garages.

Due to plaintiff's greater commercial enterprises (its extensive advertising, etc.), and due to a large extent to plaintiff's extensive and wide-spread campaign of litigation (well over three hundred suits filed) directed largely against the rank and file of small jobbers and dealers who

could ill afford the expense of patent litigation or whose volume of business would not warrant such expense, the sale and use of "**non**suction-effect" grease-guns and the sale and use of non-infringing pin-fittings has not kept apace with the sale and use of plaintiff's "suction-effect" grease-guns and plaintiff's patented pin-fittings; with the result that plaintiff's "suction-effect" grease-guns and plaintiff's patented pin-fittings greatly outnumber the "**non**suction-effect" grease-guns and the non-infringing pin-fittings manufactured and sold by defendants and others.

It is upon this commercial situation that plaintiff's charge of *contributory* infringement must ultimately rest because,

a) except for the preponderance of plaintiff's "suction-effect" grease-guns in use, defendants' intrinsically non-infringing pin-fittings would obviously have a wide enough opportunity to be lubricated by "**non**suction-effect" grease-guns of defendants (and others), so that the present charge of *contributory* infringement of claims 1, 2, 3, 4, and 8 would not even be arguable,

and

b) except for the preponderance of plaintiff's patented pin-fittings in use, defendants' intrinsically non-infringing ("**non**suction-effect") grease-guns would obviously have a wide enough opportunity to be connected onto the unpatented and non-infringing "pin-fittings" of defendants (and others), so that the present charge of *contributory* infringement of claims 14 and 15 would not even be arguable.

In reliance upon the opinions of several Circuit Courts of Appeal which had previously passed upon the patent here in suit (*Lyman v. Bassick,* 18 Fed. (2d) 29, CCA 6; and *Alemite v. Lubrair,* 62 Fed. (2d) 899, CCA 1), and held that the claims of the patent *in* suit, in order to be valid at all, must be so limited that the defendants' herein accused devices would not even *contributorily* infringe;—the validity of the patent in suit was conceded in the lower Courts in this cause.

The District Court in its opinion (5 Fed. Sup. 940), not only held the patent valid, but also gave the claims thereof the broad interpretation theretofore condemned by the Courts of Appeal for the Sixth Circuit and First Circuit in the cases above cited and since then again condemned by the Circuit Court of Appeals for the Sixth Circuit in *Hollingshead v. Bassick,* 73 Fed. (2d) 543 (involving the same patent).

Based upon this broad interpretation of the claims of the patent in suit (which interpretation is clearly in conflict with the decisions of the Courts of Appeal for the Sixth Circuit and First Circuit), the District Court held that the sale of defendants' "**non**suction-effect" and intrinsically non-infringing grease-guns constituted *contributory* infringement of the pin-fitting claims 14 and 15 of the patent in suit, and that defendant's intrinsically non-infringing pin-fittings constituted *contributory* infringement of the "suction-effect" claims 1, 2, 3, 4 and 8 of the patent in suit.

The Circuit Court of Appeals for the Third Circuit affirmed the decision of the District Court in a *per curiam* opinion rendered on December 18th, 1934 (74 Fed. (2d) 1019).

Both the District Court as well as the Circuit Court of Appeals for the Third Circuit relied for their respective

decisions in this case upon the earlier opinion of the Circuit Court of Appeals for the Second Circuit on the same patent in the case of *Bassick v. Adams,* 52 Fed. (2d) 36.

Defendants filed a Petition for Rehearing, in which the more recent decision of the Circuit Court of Appeals for the Sixth Circuit in *Hollingshead v. Bassick* (73 Fed. 2d, 543), was again called to the attention of the Circuit Court of Appeals for the Third Circuit and the conflict between the decision of said Circuit Court and the then recent decision of the Circuit Court of Appeals for the Sixth Circuit was also pointed out.

In defendants' Petition for Rehearing it was also pointed out that this Court had previously granted a petition for writ of certiorari to the Circuit Court of Appeals for the Second Circuit in the case of *Bassick v. Adams* (52 Fed. 2d, 39);—the order of this Court granting the certiorari being reported in 285 U. S. 531.

The Petition for Rehearing was, however, denied.

REASONS RELIED UPON FOR ALLOWING THE WRIT OF CERTIORARI.

The discretionary power of this Court is invoked on the following grounds in accordance with Rule 38 of the rules of this Court:

1) the Circuit Court of Appeals for the Third Circuit has erroneously decided in effect that a patent owner having manufactured and sold a patented article may prohibit the proper and only possible use of that article by virtue of his ownership of another patent covering that article in combination with ordinary and unpatented things with which it must necessarily be used and without which that patented article would have no utility at all. This decision

involves an important question of patent law which has not been, but should be, settled by this Court.

Moreover, said decision of this question of patent law by said Circuit Court of Appeals for the Third Circuit is in direct conflict with the following decisions of other Circuit Courts of Appeal involving the patent here in suit:

Lyman, et al., v. Bassick, 18 Fed. 2d, 29 (CCA 6th);

Alemite v. Lubrair, 62 Fed. 2d, 899 (CCA 1st);

Hollingshead v. Bassick, 73 Fed. 2d, 543* (CCA 6th).

and is also in conflict with the decision of the Circuit Court of Appeals for the Sixth Circuit in the case of *Edison Electric Light Co. v. Peninsular L. P. H. Co.,* 101 Fed. 831; the decision of the Circuit Court of Appeals for the Seventh Circuit in the case of *Thomson-Houston Electric v. Illinois Tel. Constr. Co.,* 152 Fed. 631; and the decision of the Circuit Court of Appeals for the Third Circuit in the case of *General Electric Co. v. Ohio Brass Co.,* 277 Fed. 917; and also the more recent decision of this Court in *Carbice Corp. of America v. American Patents Development Corp.,* 283 U. S. 27.

2) That the Circuit Court of Appeals for the Third Circuit has erroneously decided in effect that the seller of a patented article may, by virtue of ownership of another patent covering that article in combination with the ordinary devices or things with which it must necessarily be used, impose as a condition of such sale and the right

---

* The direct conflict between the decision of the Circuit Court of Appeals for the Third Circuit (74 Fed. 2d, 1019), in the case at bar and the earlier decision of the Circuit Court of Appeals for the Sixth Circuit in Hollingshead v. Bassick (73 Fed. 2d, 543), is also asserted by the respondent in the case at bar in the petition for writ of certiorari (No. 872, October Term, 1934), in the case of Bassick Mfg. Co. v. The R. M. Hollingshead Company (page 8).

to use that article in the only way in which it can be used, that such article shall not be used in combination with said devices or things sold by a competitor; and that such decision is in conflict with Section 3 of the Act of October 15, 1914, 38 Stat. L. 731, known as the Clayton Act, and is also in conflict with the decision of this Court in the case of *Carbice Corp. of America v. American Patents Development Corp.*, 283 U. S. 27.

Wherefore, your petitioners respectfully pray that a writ of certiorari be issued under the seal of this Court directed to the United States Circuit Court of Appeals for the Third Circuit sitting at Philadelphia, Pa., commanding said Court to certify and send to this Court, on a day to be designated, a full and complete transcript of the record and all proceedings of the Circuit Court of Appeals had in this cause, to the end that this cause may be reviewed and determined by this Court; that the judgment of the Circuit Court of Appeals for the Third Circuit be reversed and that petitioner be granted such other and further relief as may seem proper.

Dated April 20th, 1935.

G. S. ROGERS (doing business as Rex Duplex Fitting Company) and
R. W. DUSENBERRY,
Petitioners.

By CHARLES M. CLARKE,
W. G. DOOLITTLE,
JAMES ROY VAN KIRK,
LEONARD L. KALISH,
Counsel for Petitioners.

The undersigned hereby certify that the foregoing petition is in their opinion well founded, and that the case is one in which the petitioners' prayer should be granted by this Court.

CHARLES M. CLARKE,
W. G. DOOLITTLE,
JAMES ROY VAN KIRK,
LEONARD L. KALISH,
Counsel for Petitioners.

BRIEF FOR PETITIONERS IN SUPPORT OF PETITION FOR WRIT OF CERTIORARI.

Opinions of the Courts Below.

The per curiam opinion of the Circuit Court of Appeals for the Third Circuit on the appeal is reported in 74 F. (2d) 1019. The opinion of said Court on the Petition for Rehearing is unreported but is reproduced in the transcript of record filed herewith.

The opinion of the District Court is reported in 5 Fed. Supp. 940.

Jurisdiction.

The grounds on which the jurisdiction of this Court is invoked are:

1. The date of the judgment to be reviewed was December 18, 1934, and of the denial of the Petition for Rehearing January 25, 1935.

2. The judgment was rendered in a suit in equity brought under the Patent Statutes to determine the issues

of validity and infringement of Letters Patent for invention issued by virtue of Section 4886, R. S.

3. The statute under which jurisdiction is invoked is Section 240 (a) of the Judicial Code, 28 U. S. C. Sec. 347, as amended by the Act of February 13, 1925.

4. Cases believed to sustain the jurisdiction are *I. T. S. Co. v. Essex,* 272 U. S. 429; *Alexander Milburn Co. v. Davis-Bournonville Co.,* 270 U. S. 390; *Concrete Appliances Co. v. Gomery,* 269 U. S. 177; *Gypsy Oil Co. v. Escoe,* 275 U. S. 498; *Carbice Corporation of America v. American Patents Development Corporation* and another, 283 U. S. 27, and also:

Lyman v. Bassick, 18 Fed. (2nd) 29 (CCA 6th);
Alemite v. Lubrair, 62 Fed. (2nd) 899 (CCA 1st);
Hollingshead v. Bassick, 73 Fed. (2nd) 543 (CCA 6th).

Statement.

The facts are sufficiently stated in the petition.

Statutes.

The statute under which this case arises and which is necessary to be considered is R. S. 4886. That statute reads as follows:

> "Any person who has invented or discovered any new and useful art, machine, manufacture, or composition of matter, or any new and useful improvements thereof, not known or used by others in this country, before his invention or discovery thereof, and not patented or described in any printed publication in this

or any foreign country, before his invention or discovery thereof, or more than two years prior to his application, and not in public use or on sale in this country for more than two years prior to his application, unless the same is proved to have been abandoned, may, upon payment of the fees required by law, and other due proceeding had, obtain a patent therefor."

Section 3 of the Act of October 15, 1914, 38 Stat. L. 731, known as the Clayton Act, and also involved in the cause, is as follows:

"That it shall be unlawful for any person engaged in commerce, in the course of such commerce, to lease or make a sale or contract for sale of goods, wares, merchandise, machinery, supplies or other commodities whether patented or unpatented, for use, consumption or resale within the United States or any Territory thereof or the District of Columbia or any insular possession or other place under the jurisdiction of the United States, or fix a price charged therefor, or discount from, or rebate upon, such price, on the condition, agreement, or understanding that the lessee or purchaser thereof shall not use or deal in the goods, wares, merchandise, machinery, supplies or other commodities of a competitor or competitors of the lessor or seller, where the effect of such lease, sale, or contract for sale or such condition, agreement, or understanding may be to substantially lessen competition or tend to create a monopoly in any line of commerce."

Specification of Errors.

The errors which petitioners will urge if the writ of certiorari is allowed are that the Circuit Court of Appeals for the Third Circuit erred:

1) in holding* that claims 14 and 15 of the Gullborg patent in suit are *both* valid and are also entitled to an in-

terpretation so broad as to be contributorily infringed by petitioners' "nonsuction-effect" grease-gun, or in failing to hold that claims 14 and 15, to be valid, must necessarily be limited to the suction-effect coupler or to the suction-effect grease-gun of the Gullborg patent, and that when so limited such claims are not contributorily infringed by petitioners' "**non**suction-effect" couplers or grease-guns.

2) in holding* that claims 1, 2, 3, 4 and 8, of the Gullborg patent in suit are *both* valid and are also entitled to an interpretation so broad as to be contributorily infringed by petitioners' non-infringing pin-fitting, or in failing to hold that claims 1, 2, 3, 4, and 8, to be valid, must necessarily be limited to plaintiff's particular form of pin-fitting of the Gullborg patent, and that when so limited such claims are not contributorily infringed by petitioners' non-infringing type of pin-fitting.

3) in holding* claims 14 and 15 of the Gullborg patent in suit *broadly* valid as covering the pin-fitting element therein described in combination with **any** old type grease-gun and **any** old type coupler.

4) in holding* claims 1, 2, 3, 4 and 8, of the Gullborg patent in suit *broadly* valid as covering the "suction-effect" coupler therein described in combination with **any** old type of grease-gun and **any** old type of "pin-fitting."

5) in failing to reverse the decree of the District Court.

6) in not dismissing the Bill of Complaint for want of equity.

7) in denying petitioners' Petition for Rehearing.

---

* By affirming the like holding of the District Court.

Summary of Argument.

The points of the argument follow the reasons relied upon for the allowance of the writ with a preliminary word as to the importance of the case at bar. They are also stated in the index hereto, *supra*, page i, and for the sake of brevity they are omitted at this point.

ARGUMENT.

I.

More than 544 millions of plaintiff's patented pin-fittings had been sold up to the time of the trial of this case which is indicative of the millions of automobiles that are equipped with these pin-fittings, so that the sale of every grease compressor and coupler to a public greasing station must necessarily involve the prospect that they will be used upon cars equipped with the patented pin-fittings. The number of these public greasing stations is enormous.

If by an adjudication of contributory infringement the defendant and other manufacturers of grease-guns or compressors and couplers will be barred from the sale of such equipment to public greasing stations and garages, the plaintiff will have thereby secured an additional monopoly and destroyed all competition in the sale of these unpatented grease-gun (compressors and couplers) and there will be delivered into the hands of the plaintiff the entire system of the public greasing of automobiles equipped with the patented pin-fitting, or any other pin-fittings. The dominant position of the plaintiff as a manufacturer of pin-fittings and the large number of its pin-fittings attached to

automobiles today will, if the present decision is allowed to stand, make it impossible for the manufacturer of non-infringing pin-fittings to furnish to public greasing stations any compressors and couplers to be attached to even non-infringing pin-fittings because of the likelihood that such compressors and couplers might also be used upon the patented pin-fittings and thus come within the adjudgment of contributory infringement.

II.

The Court of Appeals for the Third Circuit has erroneously decided in effect that a patent owner having manufactured and sold a patented article may prohibit the proper and only possible use of that article by virtue of his ownership of another patent covering that article in combination with the ordinary and unpatented things with which it must necessarily be used, which is an important question of patent law which has not been, but should be, settled by this Court.

Moreover, said decision of this question of patent law by said Circuit Court of Appeals is in conflict with the decision of the Circuit Court of Appeals for the Sixth Circuit in the case of *Edison Electric Light Co. v. Peninsular L. P. & H. Co.*, 101 Fed. 831, the decision of the Circuit Court of Appeals for the Seventh Circuit in the case of *Thomson-Houston Elec. Co. v. Illinois Tel. Const. Co.*, 152 Fed. 631, and the decision of the Circuit Court of Appeals for the Third Circuit in the case of *General Electric Co. v. Ohio Brass Co.*, 277 Fed. 917.

The above decisions of the Sixth and Seventh Circuits establish as a principle of patent law that the sale by a patent owner of a patented thing that is designed for and capable of use only in a combination covered in another

patent owned by the seller carries to the purchaser by necessary implication the right to use such patented thing in the only way possible, namely, in the patented combination, and the seller is estopped to assert the contrary.

In the Ohio Brass Co. case the Third Circuit Court of Appeals denied patentability, to a combination involving the use of a patented insulator with the ordinary expedients without which it could not be used, and held that there was no invention apart from that disclosed by the insulator patent itself. In the present case the only novelty that resided in the combination of the Gullborg patent No. 1,307,734 was in the separately patented pin-fitting which represented Gullborg's only contribution to the art.

The practical form in which the question is presented in the present case is the situation of a car owner whose car was equipped by its manufacturer with a set of the patented pin-fittings. Whether there was also placed in the tool box of the car at the time it was sold one of the small Alemite hand guns fitted with a coupler for attachment to the pin-fittings is not important because this car owner, in common with most car owners, prefers to have his car greased at public greasing stations where the grease is furnished from large compressors through a conduit which may be coupled to each of the pin-fittings on the car in the course of the greasing operation.

Now if the decision of the Third Circuit Court of Appeals is to prevail, in the case at bar, the car owner stands in an anomalous position. If the unpatented grease-guns (compressors and couplers) with which the greasing stations are equipped happen to be of a manufacturer other than that of the plaintiff (who owns the patent on the combination of the patented pin-fitting with the necessary pump and coupler), then both the car owner and the service station proprietor will each be infringers of the combination

patent and the manufacturer who supplied the greasing station with its compressors and couplers will be a contributor to that infringement; whereas if the greasing station proprietor had purchased his compressors from the plaintiff, then no question of infringement would be involved. In other words, the ordinary car owner is put to the duty of first finding out where the greasing station proprietor has purchased his compressor in order to determine whether he, the car owner, may make the ordinary and only possible use of the pin-fittings on his car.

In thus failing to limit the plaintiff's monopoly to the patented pin-fittings and extending it to the sale of unpatented grease-guns and couplers, which are the ordinary tools of the art and which must necessarily be used with the pin-fittings in order that they may have any utility at all, the Third Circuit Court of Appeals has awarded a monopoly not contemplated or justified by the patent law.

We are aware of no applicable decision of this Court on this precise question of patent law, but believe it to be one that should be decided by this Court.

III.

The Circuit Court of Appeals for the Third Circuit has erroneously decided in effect that the seller of a patented article may, by virtue of the ownership of another patent covering that article in combination with the ordinary devices or things with which it must necessarily be used, impose as a condition of such sale and the right to use that article in the only way it can be used that such article shall not be used in combination with said devices or things sold by a competitor; such decision is in conflict with Section 3 of the Act of October 15, 1914, 38 Stat. L. 731, known as the Clayton Act, and is also in conflict with

the decision of this Court in the case of *Carbice Corporation of America v. American Patents Development Corporation and another,* 283 U. S. 27.

It is obvious that the owner of an automobile equipped with the patented pin-fittings has a right to use them with a gun and coupler. If, as we contend, the automobile owner has acquired by reason of his purchase the free and unrestricted right to use the pin-fitting in the only way it can be used, to wit, with a coupler and a grease-gun, then the plaintiff who owns both the patent on the pin-fitting No. 1,307,733 and the patent on the so-called combination of that pin-fitting with a coupler and a gun covered by patent No. 1,307,734 could not, when once it has sold a pin-fitting and the purchaser had acquired the free and unrestricted right to use it by reason of his purchase, destroy or delimit that right because the plaintiff also owned a so-called combination patent comprising that pin-fitting and a coupler and gun with which the pin-fitting must necessarily be used.

The sale by plaintiff of separate service compressors to public greasing stations shows that the use of the pin-fitting by the car owner was not to be confined to its use in connection with the small hand gun that might be supplied with the car. The free and unrestricted right of the purchaser to use the pin-fittings at public greasing stations where the high pressure compressors could be effectively applied to them cannot be thwarted by the circumstance that the plaintiff may have caused to be placed in the tool box of the car at the time it was sold one of the small Alemite hand guns.

If the right of the car owner as the purchaser of the pin-fittings to have them combined with a service compressor and coupler at a public greasing station is dependent upon the fact that such compressor and coupler were furnished by the plaintiff, then the sale of those pin-fittings

was necessarily upon the condition that the purchaser should not use the compressors and couplers of a competitor, and hence in violation of Section 3 of the Clayton Act.

Moreover the plaintiff's large separate sales of these service compressors are with the intent and for the purpose that their purchasers will use them upon the patented pin-fittings on the cars brought to the public garages and greasing stations to be lubricated. The purchaser of a service compressor and coupler from the plaintiff is thus permitted to use them with the patented pin-fitting, whereas no such permission or license is accorded to the purchaser of these unpatented elements from a competitor; in fact, as here, the competitor is charged with contributory infringement. In other words, the sale by plaintiff of such service compressors and couplers is in effect upon the understanding that the garage man and the greasing station proprietor will not purchase and use the compressors and couplers of a competitor, such understanding being sanctioned and enforced under the lash of the patent on the combination whereby all competition in the sale of compressors and couplers for use on the widespread and separately patented pin-fittings will be effectively suppressed.

Such a limitation of the use of the pin-fittings except with guns and couplers of plaintiff's manufacture is in violation of Section 3 of the Clayton Act and obviously the fact that the plaintiff has gotten a patent on the combination with the pin-fitting of a coupler and compressor does not relieve the plaintiff from the charge of undertaking to control, in violation of law, the purchase and sale of the expedients which must necessarily be employed in connection with the pin-fitting.

In *Lord, et al., v. Radio Corp. of America* (C. C. A. 3, 28 F. (2d) 257; certiorari denied, 278 U. S. 648), it was held that the condition for a license under a combination

patent that the licensee should purchase one of the elements from the licensor was void and unenforcible as being in violation of Section 3 of the Clayton Act. So also in the present case, a condition that a car owner or the proprietor of a greasing station must purchase the gun and coupler from the plaintiff in order to get the right to inject grease into the patented pin-fittings is likewise void and unenforcible as being in violation of Section 3 of the Clayton Act. As the Third Circuit Court of Appeals said in that case (page 260):

> "The inclusion in a patented combination of an unpatented element does not give the patentee of the combination a monopoly of each element and the exclusive right to make, use and sell that element independent of the combination."

In other words, claims 14 and 15 of the patent in suit do not give the plaintiff here the exclusive right to make and sell to garages and public greasing stations the unpatented grease-guns and coupler elements of the patented combination.

Moreover the decision of the Third Circuit Court of Appeals in the case at bar, in the present case is in conflict with this Court's decision in the Carbice case (*supra*). In that case the patent was on a transportation package consisting of a protective casing of insulating material with solid carbon dioxide and a freezable product arranged in a certain relative position therein. The owner of the patent was engaged in the sale of solid carbon dioxide and restricted the use of such a package to those who purchased the carbon dioxide element from it. The case arose upon the charge of contributory infringement against the defendant who had sold solid carbon dioxide for use in a transportation package like that described in the patent and this Court held that the patent owner could not use its patent

as a basis for compelling the purchase from it of one of the unpatented elements embraced within the patent claim, citing *Morgan Envelope Co. v. Albany Paper Co.*, 152 U. S. 425.

This Court in its decision in the Carbice case has denied the attempted distinction between its earlier decision in the Morgan Envelope case in which the element furnished by the alleged contributory infringer was a passive element or in the nature of supplies and the Carbice case where the solid carbon dioxide was a dynamic element, holding that these distinctions are without legal significance and that the patent owner has no right to control the use of unpatented materials even though an element of a patented combination. So also in the present case the sale of the unpatented compressor and coupler cannot be monopolized by the owner of the combination patent and made a condition for the rightful use of the patented pin-fitting so that all manufacturers of grease compressors and couplers will be excluded from a market which will involve the application of grease from an ordinary grease-gun or compressor through a Gullborg patented pin-fitting.

IV.

The Circuit Court of Appeals for the Third Circuit (as well as the District Court which it affirmed) has erroneously given the claims of the patent in suit a scope greater than the asserted invention, by holding on one hand that claims 1, 2, 3, 4 and 8 cover* any **old** (or new) grease-cup or "pin-fitting" regardless of its construction, if such **old** (or new) grease-cup or "pin-fitting" is momentarily coupled with, connected to, or lubricated by plaintiff's "suction-effect" grease-gun as defined in these claims, and

by holding on the other hand, that claims 14 and 15 cover* any old (or new) grease-gun, regardless of its construction (and including "nonsuction-effect" grease-gun) if such old (or new) grease-gun is momentarily coupled with or connected to plaintiff's patented "pin-fittings" forming the subject of its earlier-filed patent 1,307,733 not in suit;—in direct conflict with the following decisions of the other Circuit Courts of Appeals adjudicating the patent here in suit:

Lyman, et al., v. Bassick, 18 Fed. 2nd, 29 (CCA 6);
Alemite v. Lubrair, 62 Fed. 2nd, 899 (CCA 1);
Hollingshead v. Bassick, 73 Fed. 2nd, 543 (CCA 6).

The Court of Appeals for the Sixth Circuit in *Lyman, et al., v. Bassick,* 18 Fed. 2nd, 29, adjudicated the patent here in suit against a series of six separate defendants in six separate suits, some of which defendants were making "pin-fittings" of plaintiff's specific patented construction, and some of which were making grease-guns with the so-called "suction-effect" couplers. The Court of Appeals for the Sixth Circuit in that decision (though sustaining the claims of the Gullborg patent here involved) clearly indicated that claims 14 and 15 of the Gullborg patent were valid only if limited, by construction, to the "suction-effect" grease-gun disclosed in the Gullborg patent and that the claims 1, 2, 3, 4 and 8 were valid only if limited, by construction, to plaintiff's specific "pin-fitting" construction also disclosed in the Gullborg patent.

In that case (*Lyman, et al., v. Bassick*) a broader construction of the Gullborg claims was not necessary or required because the defendants there had appropriated the gist of plaintiff's alleged contribution to the old grease-gun, to wit, the "suction-effect" coupler and had also appropri-

*On a theory of "contributory" infringement.

ated plaintiff's alleged contribution to the old "pin-fitting," to wit, the peculiar disposition of the valve-closing spring between the valve-closure and the bayonet-pin.

Based chiefly upon a misconstruction of the opinion of the Court of Appeals for the Sixth Circuit in *Lyman, et al., v. Bassick,* 18 Fed. 2nd, 29, though in an apparent effort to follow that decision of the Sixth Circuit Court of Appeals, some other courts have since rendered decisions which are, in fact, in conflict therewith;—influenced, no doubt, by the fact that plaintiff urged or argued a misinterpretation of said opinion the Court of Appeals for the Sixth Circuit in *Lyman, et al., v. Bassick, supra.*

Plaintiff's misinterpretation of the original opinion of the Court of Appeals for the Sixth Circuit in *Lyman, et al., v. Bassick,* was made possible by the fact that six different suits were determined by this one appellate opinion, and by the further fact that after the mandates went down some of the defendants (for reasons unknown) consented to the entry of decrees in the District Court enjoining not only "suction-effect" grease-guns and infringing "pin-fittings," but enjoining also "non-suction-effect" grease-guns and non-infringing "pin-fittings" on a broader construction of the claims and on the theory of contributory infringement since then advanced by plaintiff in this and many other suits.

It was upon the strength of these final decrees in the District Courts (following a mandate) that the opinion of the Court of Appeals for the Sixth Circuit was successfully misconstrued by plaintiff in subsequent suits in which the Courts endeavored to follow said original appellate opinion of the Sixth Circuit or the opinion of some other Court which previously had followed said original opinion of the Sixth Circuit.

That the original opinion of the Court of Appeals for

the Sixth Circuit in *Lyman, et al., v. Bassick,* 18 Fed 2nd, 29, was not intended to be construed as plaintiff had urged in many courts thereafter, is evident from the more recent decision of the same Circuit Court of Appeals in *Hollingshead v. Bassick,* 75 Fed. 2nd, 543, wherein there were no defendants' "pin-fittings" involved at all, but in which there were involved two defendants' "**non**suctional" grease-guns (different from each other in detailed construction, however), and as to one of which "**non**suction-effect" grease-guns plaintiff conceded the "**non**suctional" character and charged infringement **only** of claims 14 and 15 which do not by their bare language recite the "suctional" feature.

In the recent decision of the Court of Appeals for the Sixth Circuit in *Hollingshead v. Bassick, supra,* that Court of Appeals clearly held that claims 14 and 15 in order to be valid must necessarily be limited to the "suction-effect" grease-guns or to grease-guns with a "suction-effect" coupler of the kind shown in the Gullborg patent, the clear inference being that unless so limited these claims are necessarily invalid as involving no invention.

Plaintiff in its petition for writ of certiorari to this Court in said Hollingshead case which petition is now before this Court (under docket number 872 of the October Term, 1934), has **not** petitioned this Court to review that part of the decision of the Court of Appeals for the Sixth Circuit which has so limited claims 14 and 15 but has confined its petition for writ of certiorari wholly to a factual question relating to the Hollingshead's other grease-gun involved in said Hollingshead suit, to wit, whether said other grease-gun was, in fact, of the "suctional" or "**non**suctional" character.

By so avoiding this question as to the scope of claims 14 and 15, as now again determined by the Court of Ap-

peals for the Sixth Circuit (in its petition for writ of certiorari to this Court), plaintiff has conceded the correctness of the decision of the Court of Appeals for the Sixth Circuit in *Hollingshead v. Bassick,* 73 Fed. 2nd, 543, as to the limitations which must be imposed upon the scope of claims 14 and 15 in order that they may be valid.

The Court of Appeals for the Sixth Circuit in *Hollingshead v. Bassick,* 73 Fed. 2nd, 543, did not have before it for consideration any defendant's "pin-fittings", and, therefore, that Court was not required to and, therefore, did not determine that same question of law with respect to claims 1, 2, 3, 4 and 8. There can be no doubt however that the same principle of law is applicable to both groups of claims, and that if the Court of Appeals for the Sixth Circuit had had before it also a non-infringing "pin-fitting" on a charge of contributory infringement of the "suction-effect" grease-gun claims 1, 2, 3, 4 and 8, it would undoubtedly have likewise held that these claims must likewise be limited to plaintiff's specific "pin-fitting" construction, or that they are not infringed by a "pin-fitting" construction not embodying those structural features of "pin-fitting", in which plaintiff's asserted grease-cup novelty resides.

The Court of Appeals for the First Circuit in *Alemite v. Lubrair,* 62 Fed. 2nd, 899, reached a conclusion substantially the same as that reached by the Court of Appeals for the Sixth Circuit, that is, that the combination claims 14 and 15 are either limited to plaintiff's "suction-effect" grease-gun or if broadly construed are invalid.

The Court of Appeals for the First Circuit also clearly pointed out the conflict between plaintiff's broader contention and the Clayton Act and the decisions of this Court in the Carbice case, *supra,* and in the *United Show Machinery Corporation v. United States* case, 252 U. S. 451, 465,

and the decision of the Court of Appeals for the Third Circuit in *Lord v. Radio Corporation,* 28 Fed. 2nd, 257.

Subsequent to the decision of the Court of Appeals for the First Circuit in *Alemite v. Lubrair,* 62 Fed. 2nd, 899, the defendant in that case, for reasons unknown, consented to a mandate and to a final decree holding claims 14 and 15 infringed by the **non**suctional grease-guns which in the published opinion for the Court of Appeals for the First Circuit were held **not** to infringe these claims.

This court granted a writ of certiorari to the Court of Appeals for the Second Circuit in *Bassick v. Adams,* 52 Fed. 2nd, 36, (CCA 2);—the one appellate opinion which clearly sustained plaintiff's broad contentions in the case at bar. Plaintiff settled this case out of court and the successful petitioner in that cause thereupon withdrew its appeal.

In conclusion it is submitted that the decisions of the Courts of Appeals for the Sixth Circuit and the First Circuit above referred to were correct and well founded, and the correctness of such decisions is in effect conceded by plaintiff by:

a) plaintiff's failure to raise the question of the scope of claims 14 and 15 in its recently filed petition in this Court for writ of certiorari to the Court of Appeals for the Sixth Circuit in the case of *Hollingshead v. Bassick* (*supra*)

b) plaintiff's failure to petition this Court for a writ of certiorari in the case of *Alemite v. Lubrair,* 62 Fed. 2nd, 899, and its apparent settlement of that case out of court.

c) plaintiff's disinclination to permit the same question to be reviewed by this Court in the case of *Adams v. Bassick,* 285, U. S. 531.

CONCLUSION.

From the foregoing, it appears that the Court of Appeals for the Third Circuit has rendered a decision of such a nature as to justify the issuance of a writ of certiorari for its review and one which has seriously prejudiced the rights of your petitioners.

Respectfully submitted,

CHARLES M. CLARKE,
W. G. DOOLITTLE,
JAMES ROY VAN KIRK,
LEONARD L. KALISH,
Counsel for Petitioners.

FILE COPY

Office Supreme Court, U.
SEP 27 1935

IN THE

Supreme Court of the United States

No. 31. October Term, 1935.

G. S. ROGERS, doing business as Rex Duplex Fitting Company, and R. W. DUSENBERRY,

Defendant-Petitioners,

v.

ALEMITE CORPORATION,

Plaintiff-Respondent.

BRIEF ON BEHALF OF DEFENDANT-PETITIONERS.

LEONARD L. KALISH,
Philadelphia, Pa.
Attorney for Defendant-Petitioners.

I. F. Huntzinger Co., *Appellate Printers,* Camden, N. J.

INDEX OF SUBJECT MATTER

INDEX

PAGE

Foreword ..... 1 to 3

Reference to Opinions Below 4

Grounds of Jurisdiction 4
- Date of Judgment Below 4
- Statute under which Suit was brought 4
- The lower Court's Ruling 4
- Statute under which Jurisdiction invoked 5
- Decisions Sustaining Jurisdiction 5

Statement of Case ..... 6 to 17
- The Disclosure of the Patent in Suit 6
  - The "Grease-Gun" 7
  - The "Grease-Cup" 7
- The Claims of the Patent in Suit 8
  - Hose-coupler not claimed 8
  - Grease-Gun not claimed 9
  - Grease-Cup not claimed 9
  - The two groups of "combination" claims, to wit, the "suction-effect" claims 1, 2, 3, 4 and 8 and the "pin-fitting" claims 14 and 15 ..... 9 10
- Defendants' accused devices 10
  - Defendants' admittedly old and unpatented "non-suctional" grease-guns 10
  - Defendants' admittedly old and unpatented bayonet-type grease-cup or "pin-fittings" 11
- The Charges of Infringement 11
  - The alleged contributory infringement of the "suction-effect" claims 1, 2, 3, 4 and 8 .. 11

PAGE

The alleged contributory infringement of the "pin-fitting" claims 14 and 15 12

The Commercial Situation 13

Specification of Errors 17

Argument .....20 to 53

Point I The claims violate Section 4888 of the Revised Statutes, because not limited to a definition of the alleged improvements, but also include an entire field of admittedly old complementary devices .....20 to 30

Point II To sustain plaintiff-respondent's contentions both as to validity and as to scope and as to contributory infringement, would not only be contrary to the letter and spirit of the patent laws but would also give plaintiff a monopoly expressly prohibited under Section 3 of the Clayton Act .....30 to 38

Point III Claims invalid because they improperly claim a combination of four separate and distinct devices or implements whereas plaintiff's alleged improvement is merely a trivial constructional improvement in one of the four devices without affecting the others 39

Point IV Prior adjudications of the patent in suit .....40 to 45

Point V Plaintiff has repudiated the inventive basis of the claims in suit .....46 to 47

Point VI Plaintiff has also violated the spirit and intent of the statute relating to patent disclaimers by continuing to assert a broader monopoly than the claim

PAGE

theretofore held invalid and disclaimed by plaintiff, and broader than the scope adjudged to the other claims of the patent in suit in the previous litigation, and for that reason and other reasons, plaintiff not entitled to any rights under the patent in suit ..... 48 to 49

Point VII The practical effect of sustaining plaintiff-respondent's contentions in this case ..... 50 to 53

Conclusion ..... 53 to 55

APPENDIX

Opinion (in full) of Court of Appeals for First Circuit in Alemite v. Lubrair, 62 Fed. (2d) 899 ..... 57 to 64

Plaintiff-Respondent's suggestion of further proofs in Alemite v. Lubrair responsive to foregoing Opinion of C. C. A. 1st ..... 64 to 68

Supplemental Opinion of Court of Appeals for First Circuit in Alemite v. Lubrair, on plaintiff-respondent's suggestion of further proofs 69

TABLE OF CASES.

Alemite v. Lubrair, 62 Fed. 2d, 899 (CCA 1) .. 2, 6, 15, 19, 29, 40, 44, 45, 46, 54

Alexander Milburn Co. v. Davis-Bournoville Co., 270 U. S. 390; 46 S. Ct. 324 5

Backstay Co. v. Hamilton, 262 Fed. 411 (CCA 1) ... 39

Bassick v. Adams, 52 Fed. 2d, 36 (CCA 2); (also 54 Fed. 2d, 285) (certiorari granted 285 U. S. 531) 16, 17, 45

PAGE

Bassick v. Hollingshead, No. 23, October Term, 1935, in the Supreme Court 21, 43, 51

Carbice Corporation of America v. American Patents Development Corp., 283 U. S. 27.....2, 5, 19, 21, 28, 30, 35, 47, 54

On rehearing 283 U. S. 420;.....29, 48

Concrete Appliances Co. v. Gomery, 269 U. S. 177; 46 S. Ct. 42 5

Edison Electric Light Co. et al v. Peninsular Light Power & Heat Co., et al, 101 Fed. 831 (CCA 6)..20, 29, 47, 54

Fowler & Wolfe Mfg. Co. v. McCrum-Howell Co., 215 Fed. 905 (CCA 2) 19, 46

General Electric v. Ohio Brass, 277 Fed. 917 (CCA 3)..3, 5 20, 21, 28, 29, 39, 48, 53

Gypsey Oil Co. v. Escoe, 275 U. S. 498; 48 S. Ct. 112.. 5

Harvey-Hubbell v. General Electric, 267 Fed 564 (CCA 2) 3, 19, 21, 25, 47, 54

Heald v. Rice, 104 U. S. 737 39

Hollingshead v. Bassick, 73 Fed. 2d, 543 (CCA 6)..6, 16, 17, 19, 29, 40, 43, 45, 46, 54

Hopkins-Hawley Co. v. Holden, 273 Fed. 424 (CCA 2) 19, 46

International Banding Mach. Co. v. American Banders, 9 Fed. 2d, 606, 608 (CCA 2) 18, 29, 46

I. T. S. Co. v. Essex, 272 U. S. 429, 47 S. Ct. 136..... 5

Kodell Electric v. Warren Telechron Co., 62 Fed. 2d, 692 (CCA 6) 3, 5, 20, 21, 27, 29, 39, 48, 54

Langen v. Warren Axe & Tool Co., (CCA 3); 184 Fed. 720 .....21, 29, 39, 48, 54

PAGE

Lord v. Radio Corp., 28 Fed. 2d, 257 (CCA 3) (certiorari denied 278 U. S. 648) 30, 37, 44

Lyman, et al. v. Bassick, 18 Fed. 2d, 29 (CCA 6) .6, 13, 15, 21, 23, 40, 41, 42, 49

Morgan Envelope Co. v. Albany Perforated Wrapping Paper Co., 152 U. S. 425 .....3, 5, 19, 21, 28, 38, 47, 54

Motion Picture Patents Co. v. Universal Film Co., 243 U. S. 502 .....2, 30

Radio Corp. of America v. Twentieth Century R. Corp., 19 Fed. 2d, 290, 293 (CCA 2d) 18, 29, 46

In re Ratican, 1911 C. D. 267 (CCA Dist. of Columbia), 162 O. G. 540 .....21, 39, 48, 53

Thomson-Huston Electric Co. v. Illinois Tel. Constr., 152 Fed. 631 (CCA 7) 20, 29, 47, 54

Underwood v. Gerber, 149 U. S. 224.....20, 21, 29, 39, 48, 54

United Shoe Machinery Co. v. United States, 258 U. S. 451-465; 42 S. Ct. 363 .....2, 44

STATUTES.

Revised Statutes, Section 4888 (U. S. C. Title 35, Sec. 33) 20, 29

Revised Statutes, Section 4917 (U. S. C. Title 35, Sec. 65) 48

Revised Statutes, Section 4922 (U. S. C. Title 35, Sec. 71) 48

Judicial Code, Section 240 (a), 28 U. S. C. Sec. 347... 5

Section 3 of Clayton Act (38 Stat. L. 731)...32, 35, 36, 37, 40

IN THE

SUPREME COURT OF THE UNITED STATES.

No. 31. October Term, 1935.

G. S. ROGERS, doing business as Rex Duplex Fitting Company, and R. W. DUSENBERRY,
Defendant-Petitioners,

v.

ALEMITE CORPORATION,
Plaintiff-Respondent.

BRIEF ON BEHALF OF DEFENDANT-PETITIONERS.

To the Honorable, the Chief Justice and Associate Justices of the Supreme Court of the United States:

FOREWORD.

This case comes before the Court in the form of an equity suit brought by plaintiff-respondent against defendant-petitioner for the alleged *contributory* infringement of two different groups or sets of claims of the patent in suit;—each group of claims being drawn to an alleged *combination,* on one hand, of a device containing some assertedly improved constructional features, and, on the other

hand, three or four other separate and distinct, and admittedly old and unpatentable devices;—the defendants being accused of *contributory* infringement solely because of their sale of the admittedly old and unpatentable devices.

While the cause takes the form of a suit for the alleged infringement of Letters Patent, and presents precisely the same factual situation and the same question of law as in the cases of

Carbice Corporation v. American Patents Development Corporation, 283 U. S. 27; 51 Sup. Ct. 334;
*Alemite Corp. v. Lubrair Corp.** 62 F (2d) 899 (CCA 1).

yet this cause may also be well considered in the light of such decisions as

Motion Picture Patents Co. v. Universal Film Mfg. Co., 243 U. S. 502;
United Shoe Machinery Corp. v. United States, 258 U. S. 451; 42 Sup. Ct. 363.

because, while differing from the Motion Picture type of case in form, it presents the same fundamental question.

That fundamental question is whether or not it is permissible for a patent owner to monopolize, or to be freed of competition in respect to, one or several admittedly old and unpatentable devices, implements, commodities or articles of commerce, merely because he has made some improvement in the constructional features of another and wholly **separate and distinct** device, article of manufacture and commerce, which latter improved device the patent owner was able to put into general use through his commercial power and prowess and his acumen.

---

* This case involves the same patent and the same issue of infringement as is involved in the case at bar.

Thus, whether the illegal result is attempted through private contracts or restrictive clauses in private contracts with those who wish to buy or use or deal in the patented device or commodity, as in the Motion Picture case and the United Shoe case, *supra,* or whether it is attempted by the more subtle method of including the old and unpatentable device, implement, commodity or article of commerce in the patent, claim by some all-inclusive generic description (along with the improved device specifically described in the claim) as in the Carbice case and the *Alemite v. Lubrair* case, *supra,* and such other familiar cases as

Morgan Envelope Co. v. Albany Paper Co., 152 U. S. 425; 38 L. Ed. 500;

General Electric v. Ohio Brass Co., 277 Fed. 917 (CCA 3);

Kodell Electric v. Warren Telechron Co., 62 Fed. (2d) 692 (CCA 6);

Harvey Hubbell, Inc. v. General Electric, 267 Fed. 564 (CCA 2),

the result is the same and is equally abhorrent to both the patent law as well as to the anti-trust laws.

In the Motion Picture type case and the United Shoe Machinery type case, the foundation of the illegal result is an improper clause in a private contract in respect to patented devices for which the patent owner has succeeded in creating a substantial demand, while in the *contributory* infringement type case, represented by the Morgan Envelope case, the Harvey Hubbell case, the General Electric case, the Carbice case, the Lubrair case, and the Kodell case, *supra,* the foundation of the illegal result is an improper claim in a patent which sometimes is regarded as a contract between the inventor and the Government.

OPINIONS OF THE COURTS BELOW.

The per curiam opinion of the Circuit Court of Appeals for the Third Circuit on the appeal (which affirms the District Court) is reported in 74 Fed. (2d) 1019. The opinion of said Court on the Petition for Rehearing is unreported but is reproduced in the transcript of record filed herewith.

The opinion of the District Court is reported in 5 Fed. Supp. 940.

JURISDICTION.

The grounds on which the jurisdiction of this Court is invoked are:

1. The date of the judgment to be reviewed was December 18, 1934, and of the denial of the Petition for Rehearing January 25, 1935.

2. The judgment was rendered in a suit in equity brought under the Patent Statutes to determine the issues of validity and infringement of Letters Patent for invention issued by virtue of Section 4886, R. S.

3. The lower Courts ruled that an inventor of an improvement* in one device can also acquire a monopoly of **all** other (admittedly old and unpatentable) complementary or cooperative devices with which the inventor's allegedly improved device is normally used and with which other

---

* and one which, at best, is a very trivial improvement, if, in fact, an improvement at all.

like devices (minus the alleged improvement) have always been used in the past;—merely by making an all-inclusive **generic** reference to such other **old** devices in the patent claim which also **specifically** recites the inventor's allegedly improved device, and then through usual commercial means bringing about the wide-spread use of the improved device of the claim to raise the inference that the defendant's sale of the **old** and unpatentable devices **generically** included in the claim is with the intention that they be used in conjunction with plaintiff's improved device also recited in the claim; in so-called *contributory* infringement of such "*combination*" claim.

4. The statute under which jurisdiction is invoked is Section 240 (a) of the Judicial Code, 28 U. S. C. Sec. 347, as amended by the Act of February 13, 1925.

5. Cases believed to sustain the jurisdiction are:

I. T. S. Co. v. Essex, 272 U. S. 429; 47 S. Ct. 136;
Alexander Milburn Co. v. Davis-Bournoville Co., 270 U. S. 390; 46 S. Ct. 324;
Concrete Appliances Co. v. Gomery, 269 U. S. 177; 46 S. Ct. 42;
Gypsey Oil Co. v. Escoe, 275 U. S. 498; 48 S. Ct. 112;
Carbice Corp. of Amerita v. American Patents Development Corp. and another, 283 U. S. 27; 51 S. Ct. 334;
Morgan Envelope Co. v. Albany Paper Co., 152 U. S. 425; 38 L. Ed. 500;
General Electric v. Ohio Brass, 277 Fed. 917 (CCA 3);
Kodell Electric v. Warren Telechron Co., 62 Fed. (2nd) 692 (CCA 6);

and also the following cases adjudicating the patent here in suit and sustaining defendant-petitioners' contentions:—

Lyman v. Bassick, 18 Fed. (2nd) 29 (CCA 6th);
Alemite v. Lubrair, 62 Fed. (2nd) 899 (CCA 1st);
Hollingshead v. Bassick, 73 Fed. (2nd) 543 (CCA 6th).

STATEMENT OF THE CASE.

The present suit was brought in the United States District Court in and for the Western District of Pennsylvania, by the Alemite Corporation, as plaintiff, against G. S. Rogers (doing business as Rex Duplex Fitting Company) and R. W. Dusenberry, and R. H. Kidd,[1] as defendants, on Gullborg Patent No. 1,307,734 (Granted June 24, 1919), the suit being based upon **two** separate and distinct, and specifically **different** charges of *contributory* infringement;—both charges of contributory infringement predicated however upon generically similar factual situations and upon the **same legal contention.**

The Disclosure of the Patent in Suit.

The patent in suit (No. 1,307,734) discloses **two** separate and distinct mechanical devices or entities, each having[2] a separate and independent status in the art of lubrication, and the two devices having been[2] customarily used in conjunction with each other;—the relationship between these two devices being merely that each device constitutes

---

1 R. H. Kidd withdrew as a defendant prior to trial; and upon order of Court the bill of complaint was taken **pro confesso** against him. For this reason, the final decree of the District Court (R., p. 184) does not include said R. H. Kidd, and said R. H. Kidd took no part in the appeal to the Circuit Court of Appeals.

2 At all times prior to the application for the patent in suit.

(broadly) the old environment in which the other device is customarily and necessarily used (much the same as an incandescent electric bulb or lamp is used with an electric socket, or an electric socket used with an electric bulb).

The Two Devices of the Patent in Suit.

1) *The "Grease-Gun."*

On one hand, the patent in suit discloses a broadly **old** lubricant-dispensing pump device, sometimes generally referred to as a "grease-gun," comprising an admittedly **old** pump (or compressor), an admittedly **old** hose and a broadly **old** "bayonet" type hose-coupler on the end of the hose; whereby temporary and quick-detachable connection may be made between the end of the grease-gun hose and any one of a plurality of admittedly **old** (or new) "bayonet" type grease-cups (or "pin-fittings") on an automobile or other machine (or on many automobiles or machines).—The otherwise or broadly **old** "bayonet" type hose-coupler of the patent in suit, has certain allegedly new and useful details of construction whereby a slight vacuum or suction is claimed to be produced within the coupler at the instant of disunion from **any** bayonet type grease-cup or so-called "pin-fitting", which alleged "suction-effect" is supposed to be conducive to greater cleanliness in the use of the grease-gun by sucking back into the hose-coupler any slight excess of grease that may otherwise exude or drip out at the instant of disunion.

2) *The "Grease-Cup."*

On the other hand, the patent in suit discloses a broadly **old** and specifically **old** and unpatented "bayonet" type

grease-cup or so-called "pin-fitting," comprising a small tubular body and having bayonet lugs or a bayonet-pin projecting from its two sides for the reception of **any old** (or new) "bayonet" type hose-coupler of **any old** (or new) grease-gun, and having a spring-pressed check valve or closure valve;—the asserted novelty of this "bayonet" type grease-cup or "pin-fitting" being the specific disposition of the valve-closing spring between the closure-valve and the bayonet-pin (which latter extends through the tubular body of the grease-cup) whereby the bayonet-pin may not only serve its normal function as a bayonet-pin, but may also at the same time act as a spring abutment on the inside of the grease-cup for giving support to the valve-closing spring. The grease-cup or "pin-fitting," of the patent in suit constitutes, per se, the subject-matter of plaintiff's earlier-filed Patent No. 1,307,733 **not** in suit (R., pp. 212-214), which contains claims addressed to precisely this asserted novelty of plaintiff's grease-cup or "pin-fitting" invention, and this specific grease-cup or "pin-fitting" also again disclosed in the patent in suit is also an **admittedly old** device both broadly as well as specifically considered.

The Claims of the Patent in Suit.

Allegedly improved Hose-Coupler **not** claimed, per se.

The patent in suit does **not** claim the so-called "suction-effect" hose-coupler, per se, because even the specific structural features or elements in the coupler (which give rise to this alleged "suction-effect") were admittedly old in bayonet type hose-couplers per se, and because the asserted utility and novelty of this "suction-effect" was claimed to be in an alleged "combination" of that hose-coupler with any old grease pump, any old hose, and any old grease-cup.

Admittedly old Grease-gun **not** claimed per se.

The patent in suit likewise does **not** claim what may be termed a "suction-effect" grease-gun, that is, a grease-gun comprising the old pump, the old hose and the "suction-effect" hose-coupler (the pump, hose and coupler being sometimes collectively referred to as the "grease-gun").

Allegedly improved Grease-cup **not** claimed per se.*

The patent in suit likewise does **not** claim the grease-cup or "pin-fitting" per se, because plaintiff, apparently recognizing the separate and independent status of grease-guns on one hand and grease-cups on the other hand, took out a separate and independent Patent No. 1,307,733 (**not** in issue) claiming this grease-cup or pin-fitting, per se, with its alleged novel disposition of the valve-closing spring between the valve-closure member and the bayonet-pin.

The alleged "combination" claimed.

All the claims of the patent in suit declared upon (as well as those not in issue) recite in each instance, an alleged "combination" of the **four** separate and distinct mechanical devices which have always* been used in conjunction with each other for the lubrication of machinery, to wit: (1) a pump; (2) a hose; (3) a hose-coupler; and (4) a grease-cup.

Some of the claims, such as Claim 8, for instance, also generically recite as a fifth mechanical element or device in this alleged "combination" the very apparatus to be lubricated, that is, the automobile or other machine.

The claims of the patent in suit declared upon divide into two groups, according to plaintiff's *two* separate and distinct charges of infringement, to wit:

---

* being covered, per se, by another earlier patent not in suit.

* Long prior to the filing of the application for the patent in suit.

1. Claims 1, 2, 3, 4 and 8 reciting in detail plaintiff's specific "suction-effect" hose-coupler in alleged "combination" with **any** (old or new) pump, hose, and grease-cup and automobile (in Claim 8);—the pump, hose, grease-cup and automobile being merely generically defined in these claims.

and

2. Claims 14 and 15 reciting in detail plaintiff's specific internal construction in "bayonet" type grease-cups or so-called "pin-fittings" (which construction is claimed, per se, in plaintiff's "pin-fitting" Patent No. 1,307,733 not in suit), in alleged "combination" with **any** (old or new) pump, hose and bayonet type hose-coupler;—the pump, hose and hose-coupler being merely generically defined in these claims.

DEFENDANTS' ACCUSED DEVICES.

Defendants manufactured and sold **two** separate and distinct **devices**, each having a separate and independent status in the art of lubrication, to wit:

Grease-gun:

1) admittedly **old** and **unpatented** lubricant-dispensing pumps or so-called "grease-guns," having admittedly **old** and **unpatented** "bayonet" type hose-couplers at the free ends of their discharge hoses,

adapted to be connected onto and to force lubricant into any **old** and **unpatented** "bayonet" type grease-cups or so-called "pin-fittings," as, for instance, defendants' (and others') **old** and **unpatented** grease-cups or "pin-fittings" referred to in sub-section 2 hereinbelow,

or

adapted to be connected onto (and to force lubricant into) any alleged new and patented grease-cups or "pin-fittings" such as plaintiff's "pin-fittings" disclosed (but not claimed) in its patent in suit and claimed (per se) in its other Gullborg Patent No. 1,307,733, **not** in suit.

Grease-cup:

2) admittedly **old** and **un**patented bayonet type grease-cups or so-called "pin-fittings" having "bayonet lugs" or "pins" projecting from their sides, for coupling engagement

by any **old** and **un**patented "bayonet" type hose-coupler part of any **old** and **un**patented lubricant-dispensing pump or "grease-gun," as, for instance, defendants' (and others') **old** and **un**patented "grease-guns" referred to in subsection 1 hereinabove,

or

by any allegedly new and improved and allegedly patentable "bayonet" type hose-coupler part of an admittedly old grease-gun, such as plaintiff's so-called "suction-effect" bayonet hose couplers of the patent-in-suit, with which plaintiff's admittedly **old** grease pumps on the market are equipped.

THE CHARGES OF INFRINGEMENT.

Plaintiff has **not** charged **any*** infringement of its "suction-effect" claims or its coupler-defining claims (1, 2, 3, 4, and 8), either by reason of defendants' sale of their

---

* Either direct infringement or contributory infringement.

(otherwise accused) grease-gun (which may be regarded as comprising a pump, hose, and hose-coupler), or by reason of defendants' hose-coupler per se;—plaintiff thereby conceding the fact that both defendants' "grease-guns" as well as defendants' hose-coupler, per se, are devoid of the so-called "suction-effect" or the structural features allegedly giving rise to such "suction-effect," and that defendants' grease-gun is admittedly what in this litigation may be termed as the old "**non**suction-effect" type or kind of grease-gun.

Plaintiff has likewise **not** charged **any*** infringement of its "pin-fitting" claims or "pin-fitting" defining claims (14 and 15), by reason of defendants' manufacture and sale of their (otherwise accused) "pin-fittings"; — plaintiff thereby conceding that defendants' "pin-fitting" is devoid of the structural features which are specifically recited in the "pin-fitting" defining *portions* of these claims (14 and 15).

Each of the **two** separate and distinct charges of infringement in this suit are charges of *contributory* infringement (as distinguished from direct infringement):

1. *Contributory* infringement of the "suction-effect" claims (1, 2, 3, 4, and 8) is charged **only** by reason of defendants' manufacture and sale of their **old** and **un**patented grease-cups or "pin-fitting," upon the assertion that the same are adapted and intended to have attached to them and to have lubricant forced into them by, *inter alia,* plaintiff's "suction-effect" grease-guns, that is, having the so-called "suction-effect" hose-coupler, specifi-

* Either direct infringement or contributory infringement.

cally defined by these claims in "combination" with **any old** grease pump, hose, and **any old** bayonet type grease-cup or "pin-fitting";—and notwithstanding that defendants' thus accused (old and unpatented) grease-cups or "pin-fittings" are also adapted and intended to have attached to them and to have lubricant forced into them by "**non**suction-effect" hose-couplers or "**non**suction-effect" grease-guns manufactured and sold by defendants (and others).

2. *Contributory* infringement of the "pin-fitting" claims (14 and 15) is charged by **only** reason of defendants' manufacture and sale of their **old** and **un**-patented ("**non**suctional") grease-guns, upon the assertion that the same are adapted and intended to be connected onto and to force lubricant into (*inter alia*), plaintiff's grease-cups or "pin-fittings" defined in detail in these claims;—and notwithstanding that defendants' thus accused **old** and **un**patented grease-guns are also adapted and intended to be connected onto and to force lubricant into other **non**-infringing "pin-fittings" manufactured and sold by defendants (and others).

THE COMMERCIAL SITUATION.

Pin-fittings on one hand and "grease-guns" on the other hand (the latter comprising a pump, a hose and a hose-coupler) were old in the art, as was the combination of pin-fitting and grease-gun (see *Lyman, et al., v. Bassick,* 18 Fed. (2d) 29 CCA 6th, involving the patent here in suit).

The specific pin-fittings defined in detail in claims 14 and 15 of the patent in suit were manufactured and widely distributed by plaintiff under its other Gullborg Patent No. 1,307,733 (not in suit). At the time of trial, more than 544,000,000 of the patented pin-fittings had been sold by plaintiff (R., p. 18).

The only purpose of plaintiff's pin-fittings (just as the pin-fittings of defendants and others) is to have a grease-gun attached to them from time to time (by means of a "bayonet" type hose-coupler) so that grease may be forced into the pin-fitting from time to time.

Without a grease-gun the pin-fitting is useless.

The specific "suction-effect" grease-guns defined, *inter alia,* in detail in claims 1, 2, 3, 4 and 8 of the patent in suit were manufactured and widely distributed by plaintiff under its patent in suit. At the time of trial, more than 17,000,000 of such alleged "suction-effect" grease-guns had been manufactured and distributed by plaintiff, and were in use largely in the hands of public greasing stations and garages.

Due to plaintiff's greater commercial enterprises (its extensive advertising, etc.), its unlimited financial resources, and due to a large extent to plaintiff's extensive and widespread campaign of litigation (well over three hundred suits filed) directed largely against the rank and file of small jobbers and dealers who could ill afford the expense of patent litigation or whose volume of business would not warrant such expense; — the sale and use of "**non**suction-effect grease-guns and the sale and use of **non**-infringing bayonet type grease-cups or so-called "pin-fittings" has not kept apace with the sale and use of plaintiff's "suction-effect" grease-guns and plaintiff's patented pin-fittings; with the result that plaintiff's "suction-effect" grease-guns and plaintiff's patented pin-fittings greatly outnumber the

"**non**suction-effect" grease-guns and the **non**-infringing pin-fittings manufactured and sold by defendants and others.

It is upon this commercial situation that plaintiff's charge of *contributory* infringement must ultimately rest because,

a) except for the preponderance of plaintiff's "suction-effect" grease-guns in use, defendants' intrinsically non-infringing pin-fittings would obviously have a wide enough opportunity to be lubricated by "**non**suction-effect" grease-guns sold by defendants (and others), so that the present charge of *contributory* infringement of claims 1, 2, 3, 4, and 8 would not even be arguable,

and

b) except for the preponderance of plaintiff's patented pin-fittings in use, defendants' intrinsically non-infringing ("**non**suction-effect") grease-guns would obviously have a wide enough opportunity to be connected onto the unpatented and **non**-infringing "pin-fittings" sold by defendants (and others), so that the present charge of *contributory* infringement of claims 14 and 15 would not even be arguable.

In reliance upon the opinions of several Circuit Courts of Appeal which had previously passed upon the patent here in suit (*Lyman v. Bassick,* 18 Fed. (2d) 29, CCA 6; and *Alemite v. Lubrair,* 62 Fed. (2d) 899, CCA 1), and held that the claims of the patent in suit, in order to be valid at all, must be so limited that the defendants' herein accused devices would not even *contributorily* infringe;—the validity of the patent in suit was conceded in the lower Courts in this cause. (Defendant-petitioner no longer con-

cedes the validity of the patent in suit, but on the contrary also denies validity.)

However, the District Court in its opinion (5 Fed. Sup. 940), not only held the patent valid, but also gave the claims thereof the broad interpretation theretofore condemned by the Courts of Appeal for the Sixth Circuit and First Circuit in the cases above cited* and since then again condemned by the Circuit Court of Appeals for the Sixth Circuit in *Hollingshead v. Bassick,* 73 Fed. (2d) 543 (all involving the same patent).

Based upon this broad interpretation of the claims of the patent in suit (which interpretation is clearly in conflict with the decisions of the Courts of Appeal for the Sixth Circuit and First Circuit), the District Court held that the sale of defendants' "**non**suction-effect" and intrinsically **non**-infringing grease-guns constituted *contributory* infringement of the pin-fitting claims 14 and 15 of the patent in suit, and that the sale of defendant's intrinsically **non**-infringing pin-fittings constituted *contributory* infringement of the "suction-effect coupler" claims 1, 2, 3, 4 and 8 of the patent in suit.

The Circuit Court of Appeals for the Third Circuit affirmed the decision of the District Court in a *per curiam* opinion rendered on December 18th, 1934 (74 Fed. (2d) 1019).

Both the district Court as well as the Circuit Court of Appeals for the Third Circuit relied for their respective decisions in this case upon the earlier opinion of the Circuit Court of Appeals for the Second Circuit on the same patent in the case of *Bassick v. Adams,* 52 Fed. (2d) 36.

Defendants filed a Petition for Rehearing, in which the more recent decision of the Circuit Court of Appeals for

---

* Lyman, et al., v. Bassick, 18 Fed. 2nd 29 (CCA 6); Alemite v. Lubrair, 62 Fed. 2nd 899 (CCA 1).

the Sixth Circuit in *Hollingshead v. Bassick* (73 Fed. 2d, 543), was again called to the attention of the Circuit Court of Appeals for the Third Circuit and the conflict between the decision of said Circuit Court and the then recent decision of the Circuit Court of Appeals for the Sixth Circuit was also pointed out.

In defendants' Petition for Rehearing it was also pointed out that this Court had previously granted a petition for writ of certiorari to the Circuit Court of Appeals for the Second Circuit in the case of *Bassick v. Adams* (52 Fed. 2d, 39);—the order of this Court granting the certiorari being reported in 285 U. S. 531.

The Petition for Rehearing was, however, denied.

SPECIFICATION OF ERRORS.

The lower Courts:

1) Erred in holding that claims 14 and 15 of the Gullborg patent in suit are valid and at the time also entitled to an interpretation so broad as to be contributorily infringed by defendant-petitioners' "**non**suction - effect" grease-gun, or in failing to hold that claims 14 and 15, to be valid, must necessarily be limited to the suction-effect coupler or to the suction-effect grease-gun of the Gullborg patent, and that when so limited such claims are **not** contributorily infringed by defendant-petitioners' "**non**suction-effect" couplers or grease-guns.

2) Erred in holding that claims 1, 2, 3, 4 and 8, of the Gullborg patent in suit are valid and at the same time also entitled to an interpretation so broad as to be *contributorily* infringed by defendant-petitioners' admittedly **non**-infring-

ing pin-fitting, or in failing to hold that claims 1, 2, 3, 4 and 8, to be valid, must necessarily be limited to plaintiff's particular form of pin-fitting of the Gullborg patent, and that when so limited such claims are **not** *contributorily* infringed by defendant-petitioners' **non**-infringing type of pin-fitting.

3) Erred in holding claims 14 and 15 of the Gullborg patent in suit *broadly* valid as covering the pin-fitting element therein described in *combination* with **any** and every old type grease-gun and **any** and every old type coupler.

4) Erred in holding claims 1, 2, 3, 4 and 8, of the Gullborg patent in suit *broadly* valid as covering the "suction-effect" coupler therein described in *combination* with **any** and every old type of grease-gun and **any** and every old type of "pin-fitting."

5) Erred in not dismissing the Bill of Complaint for want of equity.

6) Erred in not denying to plaintiff-respondent (and in not condemning plaintiff-respondent's effort to secure) a monopoly of the old and unpatentable devices, implement or articles of commerce, **either.**

a) by giving the all-exclusive generic definition of the old and unpatentable devices included in the claims in suit a narrow interpretation limited merely to that form of such devices as actually disclosed in the patent in suit, in accordance with:
Radio Corp. v. 20th Century Radio Corp., 19 Fed. (2nd) 290 (CCA 2);
International Banding Mach. Co. v. American Bander Co., 9 Fed. (2nd) 606 (CCA 2);

Hopkins-Hawley Co. v. Holden, 273 Fed. 424 (CCA 2);

Fowler-Wolfe Co. v. McCrum-Howell Co., 215 Fed. 905 (CCA 2);

Alemite v. Lubrair, 62 Fed. (2nd) 899 (CCA 1);

Hollingshead v. Bassick, 73 Fed. (2nd) 543 (CCA 6).

or

b) by holding that the *combination* claims in suit are **not** infringed merely by the sale of the old and unpatentable devices or implements included in such claim, even though such old devices may then be used in conjunction with plaintiff's improved device also concluded in the claim; and that the *combination* claims can be infringed **only** by the manufacture or sale of the **gist** of plaintiff's invention or plaintiff's contribution to the art;—in accordance with such decisions as

Harvey Hubbel v. General Electric, 267 Fed. 564 (CCA 2);

Morgan Envelope Co. v. Albany Paper Co., 152 U. S. 425; 38 L. Ed. 500;

Carbice Corp. v. American Patents Development Corp., 283 U. S. 27; 51 S. Ct. 334.

or

c) by ruling that the unconditional purchaser of the allegedly inventive "pin-fittings" sold by plaintiff, or of the allegedly inventive "suction-effect" grease-guns sold by plaintiff, had an implied license to use in conjunction with either of these two devices, such other old and unpatentable bayonet type grease-cups or so-called "pin-fittings" and such other old and unpatentable "**non**suction-effect" grease-guns as others may make and sell;—

in accordance with such decisions as

Edison Electric Light Co. v. Peninsular L. P. of H. Co., 110 Fed. 831 (CCA 6);

Thomson-Huston Electric Co. v. Illinois Tel. Const., 152 Fed. 631 (CCA 7).

or

d) by holding the claims invalid in accordance with

General Electric v. Ohio Brass, 277 F. 917 (CCA 3);

Kodell v. Warren Telechron, 62 Fed. (2d) 692 (CCA 6);

Underwood v. Gerber, 149 U. S. 224; 37 L. Ed. 710.

A summary of the Arguments is contained in the subject-matter index to the Brief.

ARGUMENT

Point I.

Section 4888 of the Revised Statutes (U. S. C. Title 35, Sec. 33) clearly requires that the inventor, after describing in the specification and portraying in the drawings, the story of his alleged invention or discovery or improvement, shall **"particularly point out and distinctly claim"** the particular part, improvement or combination which in reality represents his invention or contribution to the art.

This statutory requirement is the reason for the existence of claims in Letters Patent. It is a fundamental and all-essential and wholesome requirement that the inventor, after describing his invention with as much surrounding environment as he chooses, shall set forth in one or more distinctly worded claims, the particular part which is his contribution to the art, so that it may be readily distinguishable, and set apart, from that which is merely the prior art or from those devices which are merely the mechanical environment or the commercial environment or the

utilitarian environment in which the inventor's allegedly improved device may be useful. The claims in suit all violate this statutory requirement.

In the case at bar, the combination of a grease pump, of a hose, of a hose-coupler, and of a grease-cup (to be temporarily engaged by the latter), was **admittedly old** prior to the filing of the application for the patent here in suit, as disclosed by the French Seng patent No. 468,869 (R., pp. 272-5) and as disclosed in plaintiff-respondent's earlier Gullborg patent No. 1,307,733 not in suit (R., pp. 212-14) and as also disclosed in the British Alley patent No. 21,893 of 1906, and plaintiff-respondent's own still-earlier Winkley patent No. Re. 14667, cited by the Court of Appeals for the Sixth Circuit in the case of *Lyman v. Bassick,* 18 Fed. (2d) 29,—adjudicating the Gullborg patent here in suit and also found in the record in the case of *Bassick v. Hollingshead* now before this Court under Docket No. 23 of the October Term of 1935.

Indeed, not only was the broad combination of a grease pump, hose, hose-coupler and grease-cup, old, but indeed, the use of a bayonet-type grease-cup and a bayonet-type hose-coupler in this very combination was also old prior to the filing date of the patent here in suit, as shown by plaintiff-respondent's earlier Gullborg patent No. 1,307,733 (R., pp. 212-14) and as shown by the British Alley patent No. 21,893 of 1906, above referred to.

Defendant-petitioners submit that the case at bar is on all fours with the *Harvey Hubbell v. General Electric case,* supra; the *Kodell v. Warren Telechron case, supra;* the *General Electric v. Ohio Brass case, supra;* the *Morgan Envelope v. Albany Paper case, supra;* the *Langan v. Warren Axe Tool,* 184 Fed. 720 (CCA 3); *In re Ratican,* 1911 C. D. 267; 162 O. G. 540 (CCA. D. of C.) and the *Carbice case, supra,* and the *Underwood v. Gerber case, supra.*

Plaintiff's contribution to the art, or plaintiff's improvement (if any there be) is in the internal construction of plaintiff's hose-coupler or conduit-coupler, and in the internal construction of plaintiff's bayonet-type grease-cup or so-called "pin-fitting", and it is **not** in any alleged *combination* of either of these two devices with the old grease-pump or hose, nor with the old and unimproved hose-coupler, nor with the old and unimproved grease-cup.

Taking claims 8 and 15 of the Gullborg patent in suit as typical of the two groups of claims in issue, the claims, analyzed, mean the following:—

Coupler Claim 8

The meaning of the claim language:—	**The Language of the Claim:—**
	"The combination with"
This is merely **any** automobile, industrial machine or farm tractor, or other machine.	"apparatus having a part to be lubricated"
This is the oil passageway or lubricant hole drilled or formed in the body of the machine for conveying the lubricant from the outside of the machine to some bearing on the inside of the machine.	"a conduit for conducting lubricant to said part"
This is *any* **old** (or new) grease cup or so-called "fitting"	"a coupling member secured to the end of said conduit and provided with a spring-pressed valve closure"

This is *any* old (or new) grease pump or "grease-gun"	"means for supplying lubricant to said conduit comprising"
The conventional pump chamber or reservoir of the conventional "grease-gun" with the usual pump outlet	"a receptacle provided with a discharge outlet"
This is any one of the many old hose couplers or conduit couplers to be found on the many old grease-guns of the prior art.	"a second coupling member connected with said discharge outlet"
This may be the screw-threaded joint or the conventional "bayonet" joint of the couplers of grease-guns of the Alley British patent No. 21893 of 1906 referred to by the Court of Appeals for the Sixth Circuit in *Lyman et al v. Bassick,* 18 Fed. (2d) 29, and particularly in the first column on page 34, or it may be the claw-type coupling means of plaintiff-respondent's earlier grease-gun *combination* patent No. Re. 14667 to Winkley, also referred to by the Court of Appeals for the Sixth Circuit.	"means for detachably uniting said coupling members, and"

This alone is plaintiff's alleged inventive contribution upon which this entire claim rests, and this allegedly self-cleansing spring-pressed washer in the coupler is contained wholly within the coupler and can at best, merely represent an improvement in the coupler.	"means for sealing the joint between said coupling members and for removing excess lubricant from the adjacent ends thereof when said coupling members are uncoupled."

Grease-Cup Claim 15

The meaning of the claim language:—	**The Language of the Claim:—**
	"The combination with"
This is in every detail exactly the same grease-cup covered, per se, by claims 4 and 5 of plaintiff-respondent's earlier Gullborg patent No. 1,307,733 (not in suit) and is, in fact, almost verbatim the language of these claims of the earlier patent.	"a grease-cup comprising a tubular body member having a closure seat, a closure, a pin extending through said tubular member and from both sides thereof, a spring confined between said pin and closure and tending to hold said closure on its seat, of"
Any **old** (or new) grease pump or grease-gun of whatever construction	"a grease pump having"
Any **old** hose	"a discharge conduit, and"
Any **old** bayonet-type coupler, to wit, both plain-	"means coacting with the ends of said pin for detach-

tiff's allegedly improved "suction-effect" coupler on which claims 1, 2, 3, 4 and 8 depend, as well as defendant-petitioner's admittedly **old** and unpatentable "**non**suction-effect" coupler.

ably connecting the discharge end of said conduit with said grease cup."

Thus,

defendant-petitioner's admittedly old and unpatentable "**non**suction-effect" grease-gun was held *contributorily* to infringe **only** Gullborg claims 14 and 15 which depend upon the plaintiff's alleged grease-cup improvement and recite the grease-gun only in the broadest generality, while

defendant-petitioner's admittedly old and unpatentable bayonet-type grease-cups or so-called "pin-fittings" were held *contributorily* to infringe **only** Gullborg claims 1, 2, 3, 4 and 8 which depended upon the alleged coupler improvement and which, in turn, recited the grease-cup in the broadest generality.

It will readily be realized that there is hardly an ancient or modern mechanical or electrical device, implement, tool or apparatus which can realize its normal utility without conjoint use with some other device, implement or tool. Thus, the familiar electrical wall outlet, of whatever internal construction, has no utility whatever unless and until it receives the two blades or prongs of the contact plug, which enter its contact chambers for the well-known electrical engagement used on all sorts of domestic and industrial electrical appliances, from bridge lamps to toasters, electric fans, vacuum cleaners, etc. Thus, the allegedly improved electrical outlet or so-called "base" in the *Harvey Hubbell v. General Electric case, supra,* was certainly use-

less until there was brought into "combination" with the old contact plug or cap having the contact blades or prongs, as such "*combination*" was claimed in the patent there in suit. Had the patentee there had the astuteness of plaintiff-respondent in the case at bar, he might undoubtedly have included in the same combination, broadly, a flexible electric cord or conductor connected to and emanating from the contact-plug and an electrical appliance operatively connected with the other end of the electrical cord, because, by the same token, even the electric base or outlet and the contact plug or cap were likewise inoperative and useless unless current actually flowed through the contact made between the two of them, and through an electrical cord and an electrical appliance or uten[illegible]h the cord was intended to feed with electricity.

Thus, if plaintiff-respondent's theory of patent claims, and if plaintiff-respondent's theory of contributory infringement are both tenable, then it would be a simple matter indeed for some large electrical concern or public utility concern to arrange over a period of a few years, for the installation in any given area or territory, of some improved electrical wall outlet or electrical socket containing some meritorious or some trivial internal constructional improvement, and then, by claiming such improved electrical socket in "combination" broadly with any old two-bladed electrical contact plug and with any old electrical conductor connected therewith, and with any old electrical appliance or utensil operatively connected to the free end of the electrical conductors, the public would undoubtedly become *contributory* infringers of such combination patent when plugging into such improved electrical wall outlet or electrical socket, the old toaster, bridge lamp, electric fan, vacuum cleaner, waffle iron, etc., by means of the old two-bladed electric plug or cap.

In that case, just as it may be conceded in the case at bar, the improved electrical wall outlet or electrical socket may make a superior contact with the old two-bladed electric plug and thereby improve and facilitate the electrical connection and perhaps even improve the general convenience of using the various electrical utensils.

That such a situation is not altogether visionary and far-fetched, but in fact can easily be developed, is shown by such very recent cases as *Kodell Electric v. Warren Telechron Clock Co.*, 62 Fed. (2nd) 692. In this case the invention was in a certain master clock installed at central electric power houses which generate commercial alternating current for the public, for more accurately timing the cycles of the current so that there shall always be exactly sixty cycles in each second;—thereby to obtain a more accurate timing of the literally hundreds of thousands of admittedly old synchronous-motor type electric clocks which were "plugged in" on the electric lines of the electric power company supplying that territory. The claim there too, was **not** for the master clock which improved the timing of the cycles of the alternating current, but was indeed, for a combination of that master clock invented by the patentee, together with the generator, the electrical conductor wires spreading across the country and the old synchronous-motor type electric clock;—all with the result that the maker and seller of admittedly old synchronous-motored electric clocks suddenly became an contributory infringer because his clocks were brought into the alleged "*combination*" with the new master clock located at the power station, and indeed forming a very useful improvement in the timing of the cycles of the electric current. The Court of Appeals for the Sixth Circuit there very promptly struck down the patent as failing to claim only the inventor's alleged invention in a regulator device, and as obviously attempting

to monopolize the old electric clocks by their improper inclusion in the claims of the patent on a current regulator.

Precisely that type of claim was also presented in *General Electric v. Ohio Brass, supra,* where the allegedly improved electrical insulators were claimed in combination broadly with any old telegraph pole, having the old conventional cross-arms and the old electrical conductors which were supported by these new and improved insulators from pole to pole, so that upon the fortuitous circumstance of the substantial adoption of the patentee's improved insulator, the future sale of electric wire by others would have constituted *contributory* infringement of these so-called "combination" claims.

Likewise, the toilet-paper cabinet in the *Morgan Envelope v. Albany Paper case, supra,* was without utility in a sense, without a roll of paper operatively disposed therein and cooperatively related thereto.

So too, the allegedly improved refrigerating package or housing in the *Carbice case, supra,* was without utility and was incomplete in a sense, without the presence of the old solid carbon dioxide operatively disposed therein, and there, as in the case at bar, the wide commercial distribution of the allegedly improved package was to become the basis for the monopoly on dry ice, on the theory of *contributory* infringement.

This, perhaps, well illustrates the wholesomeness of the statutory requirement that* in the claims of the patent, the inventor shall separate the wheat from the chaff, and shall separate his actual contribution to the art from the prior-art as well as from the complementary or environmental devices which give his improved device its utility.

---

* regardless of how much that is within the public domain he has included in his specification and drawings.

The many attempts to confuse and co-mingle the inventor's property with the things which are in the public domain, in violation of the above quoted parts of R. S. 4888, is shown by the long line of cases on this point, of which but a few have been cited above.

The courts have endeavored to deal with this type of situation in several different ways. Thus, sometimes the courts have in a sense limited the application of the doctrine of contributory infringement, as in the Harvey Hubbell case, the Morgan Envelope case and the Carbice case;—to instances where the defendant appropriates the *gist* of the invention. In other cases the courts have held the claims limited beyond their bare language so as to exclude defendant's device, and to permit a holding of non-infringement, as in the *Radio Corporation v. 20th Century case, supra;* the *International Banding Machine v. American Bander, supra; Alemite v. Lubrair, supra,* and *Hollingshead v. Bassick, supra.* In still other cases the courts held that the unconditional sale by the patent owner of the device containing the *gist* of his invention, carried with it an implied license for others to sell the other old parts of the improper "combination" claims as in the *Edison Electric v. Peninsular case,* and the *Thomson-Huston v. Illinois Telephone Co. case, supra.*

It is respectfully submitted, however, that the sounder and more fundamental course is to hold such improper claims invalid, as in the *General Electric v. Ohio Brass case;* the *Kodell v. Warren Telechron case;* the *Langen v. Warren Axe case;* in the *Underwood v. Gerber case;* and perhaps as in the *Carbice case,* on rehearing (283 U. S. 420; 51 Sup. Ct. 496) because the claims are obviously invalid, as failing particularly to point out and distinctly to claim the alleged invention, as required by Section 4888 of the Revised Statutes,

but on the contrary, confuse and co-mingle the patentee's property with things which have long been within the public domain.

ARGUMENT

Point II.

Plaintiff's attempted use of the improper form of the claims in suit, to monopolize admittedly old and unpatentable devices, implements, commodities and articles of commerce (none of which contain any of plaintiff's alleged improvements) is violative of the spirit and letter of the anti-trust laws, and particularly Section 3 of the Clayton Act, 38 Stat. L. 731, which makes it unlawful to sell any machine, device or commodity, whether allegedly improved and patented, or whether unpatented; on the condition that the purchaser of such machine, device or commodity shall "not use or deal in the goods, wares, merchandise, machinery, supplies or other commodities of a competitor or competitors of the * * * seller, where the effect of such sale * * * or such conditions * * * may be to substantially lessen competition or tend to create a monopoly in any line of commerce."

Lord v. Radio Corp., 28 Fed. (2d) 257 (CCA 3) (certiorari denied 278 U. S. 648);

Motion Picture Patents Co. v. Universal Film Co., 243 U. S. 502;

Carbice v. American Patent Development, 283 U. S. 27.

More than 544,000,000 of plaintiff-respondent's separately patented* pin-fittings had been sold up to the time of the trial of this case.

---

* through the earlier Gullborg patent not in suit.

These pin-fittings had been sold by plaintiff-respondent largely through the automobile manufacturer who had equipped his cars at the factory with these grease-cups or pin-fittings and is indicative, in a measure, of the millions of automobiles that thus became equipped with these grease-cups or pin-fittings of this particular internal construction.

Plaintiff-respondent also sold millions of its "suction-effect" grease-guns or grease-dispensing pumps or compressors with its allegedly improved "suction - effect" bayonet coupler;—both to the car manufacturer as well as to the many thousands of public garages and greasing stations.

If by an adjudication of contributory infringement, the defendant and other manufacturers of **old** grease-guns or compressors and **old** couplers will be barred from the sale of such equipment to public greasing stations and garages, the plaintiff will have thereby secured an additional monopoly and destroyed all competition in the sale of these **un**patented grease-guns (compressors and couplers) and there will be delivered into the hands of the plaintiff-respondent the entire system of the public greasing of all automobiles equipped with plaintiff's patented pin-fitting.

Likewise, if by an adjudication of contributory infringement, the defendant and other manufacturers of **old** bayonet type grease-cups will be barred from the sale of such grease-cups to automobile manufacturers and to the public at large, the plaintiff will have also secured an additional monopoly and destroyed all competition in the sale of these **un**patented bayonet type grease-cups.

Thus, the dominant position of the plaintiff as a manufacturer of both grease-cups or "pin-fittings" and as a manufacturer of grease-guns, and the large number of its "pin-fittings" attached to the automobile produced today, and the large number of its grease-guns in the hands of

public garages, service stations and greasing stations, will, if the plaintiff-respondent's contentions are sustained, make it impossible for the manufacturer of the **un**patented and **non**infringing "pin-fittings" and the manufacture of the **un**patented grease-guns to furnish the one to the car manufacturer or car owner, and to furnish the other to the public greasing stations, because of the likelihood, on one hand, that such **un**patented and **non**-infringing "pin-fittings" so furnished to the car manufacturer or car owner, will have attached to them (at some greasing station) the plaintiff's grease-gun with the "suction-effect" coupler, in alleged contributory infringement of Gullborg claims 1, 2, 3, 4 and 8, which specify this particular "suction-effect" coupler but are not limited to any particular construction in a bayonet-type grease-cup or "pin-fitting", and because of the likelihood on the other hand that the **un**patented and "**non**-suctional" grease-guns which defendant and others may supply to garages and greasing stations may also be used in connection with and for the lubrication of plaintiff's patented "pin-fittings" in alleged contributory infringement of Gullborg claims 14 and 15, which specify those "pin-fittings" but are not limited to any particular kind of grease-gun.

Thus, if plaintiff-respondent's contentions are sustained, then plaintiff-respondent and anyone else having the financial ability and dominating commercial position, can effect with absolute immunity, the very thing expressly prohibited by the anti-trust laws, particularly Section 3 of the Clayton Act. Thus, if plaintiff-respondent's contentions are sustained, any one of the vast array, if not in fact, the greatest majority of all devices, commodities, implements or articles of commerce, can be readily monopolized in violation of both the letter and spirit of Section 3 of the Clayton Act, by merely claiming such devices, commodities or

articles of commerce, in generic terms, *in combination*" with some other complementary or environmental device with which it is normally used, and placing some meritorious or some trivial constructional improvement in such other complementary or environmental device to give "novelty" to the claim.

Thus, the precise monopolistic scheme which plaintiff-respondent could not effectuate by private contract, notwithstanding its ownership of a hose-coupler invention, or notwithstanding its ownership of a grease-cup invention, it could effectuate with immunity by what is, in effect, a government contract in respect to an invention, that is, Letters Patent for an invention.

It is respectfully submitted that the patent laws were never meant to develop monopolies of the **old** and **un**-patentable implements or commodities, and that the anti-trust laws expressly prohibit such monopolies.

The practical form in which the question is presented in the present case is the situation of a car owner whose car was equipped by its manufacturer with a set of the patented pin-fitting. Whether there was also placed in the tool box of the car at the time it was sold one of the small Alemite hand guns fitted with a coupler for attachment to the pin-fittings is not important because this car owner, in common with most car owners, prefers to have his car greased at public greasing stations where the grease is furnished from large compressors through a conduit which may be coupled to each of the pin-fittings on the car in the course of the greasing operation.

Now if the decision of the Third Circuit Court of Appeals is to prevail, in the case at bar, the car owner stands in an anomalous position. If the unpatented grease-guns (compressors and couplers) with which the greasing stations are equipped happen to be of a manufacturer other

than that of the plaintiff (who owns the patent on the combination of the patented pin-fitting with the necessary old pump and coupler), then both the car owner and the service station proprietor will each be infringers of the combination patent and the manufacturer who supplied the greasing station with its compressors and couplers will be a contributor to that infringement; whereas if the greasing station proprietor had purchased his compressors from the plaintiff, then no question of infringement would be involved. In other words, the ordinary car owner is put to the duty of first finding out where the greasing station proprietor has purchased his compressor in order to determine whether he, the car owner, may make the ordinary and only possible use of the pin-fittings on his car.

In thus failing to limit the plaintiff's monopoly (under claims 14 and 15) to the patented pin-fittings and extending it to the sale of unpatented grease-guns and couplers, which are the ordinary tools of the art and which must necessarily be used with the pin-fittings in order that they may have any utility at all, the Third Circuit Court of Appeals has awarded a monopoly not contemplated or justified by the patent law.

We are aware of no applicable decision of this Court on this precise question of patent law, but believe it to be one that should be decided by this Court.

Thus, the Circuit Court of Appeals for the Third Circuit has erroneously decided in effect that the seller of a patented article may, by virtue of the ownership of another patent covering that article in combination with the ordinary devices or things with which it must necessarily be used, impose as a condition of such sale and the right to use that article in the only way it can be used that such article shall not be used in combination with said devices or things sold by a competitor; such decision is in conflict

with Section 3 of the Act of October 15, 1914, 38 Stat. L. 731, known as the Clayton Act, and is also in conflict with the decision of this Court in the case of *Carbice Corporation of America v. American Patents Development Corporation and another*, 283 U. S. 27.

It is obvious that the owner of an automobile equipped with the patented pin-fittings has a right to use them with a gun and coupler. If, as we contend, the automobile owner has acquired by reason of his purchase the free and unrestricted right to use the pin-fitting in the only way it can be used, to wit, with a coupler and a grease-gun, then the plaintiff who owns both the patent on the pin-fitting No. 1,307,733 (not in suit) and the patent on the so-called combination of that pin-fitting with a coupler and a gun, covered by patent No. 1,307,734 could not, when once it has sold a pin-fitting and the purchaser had acquired the free and unrestricted right to use it by reason of his purchase, destroy or delimit that right because the plaintiff also owned a so-called combination patent comprising that pin-fitting and any old coupler and gun with which the pin-fitting must necessarily be used.

The sale by plaintiff of separate service compressors to public greasing stations shows that the use of the pin-fitting by the car owner was not to be confined to its use in conection with the small hand gun that might be supplied with the car. The free and unrestricted right of the purchaser to use the pin-fittings at public greasing stations where the high pressure compressors could be effectively applied to them cannot be thwarted by the circumstance that the plaintiff may have caused to be placed in the tool box of the car at the time it was sold one of the small Alemite hand guns.

If the right of the car owner as the purchaser of the pin-fittings to have them combined with a service compres-

sor and coupler at a public greasing station is dependent upon the fact that such compressor and coupler were furnished by the plaintiff, then the sale of those pin-fittings was necessarily upon the condition that the purchaser should not use the compressors and couplers of a competitor, and hence in violation of Section 3 of the Clayton Act.

Moreover the plaintiff's large separate sales of these service compressors are with the intent and for the purpose that their purchasers will use them upon the patented pin-fittings on the cars brought to the public garages and greasing stations to be lubricated. The purchaser of a service compressor and coupler from the plaintiff is thus permitted to use them with the patented pin-fitting, whereas no such permission or license is accorded to the purchaser of these unpatented elements from a competitor; in fact, as here, the competitor is charged with contributory infringement. In other words, the sale by plaintiff of such service compressors and couplers is in effect upon the understanding that the garage man and the greasing station proprietor will not purchase and use the compressors and couplers of a competitor, such understanding being sanctioned and enforced under the lash of the patent on the combination whereby all competition in the sale of compressors and couplers for use on the widespread and separately patented pin-fittings will be effectively suppressed.

Such a limitation of the use of the pin-fittings except with guns and couplers of plaintiff's manufacture is in violation of Section 3 of the Clayton Act and obviously the fact that the plaintiff has gotten a patent on the combination with the pin-fitting of a coupler and compressor does not relieve the plaintiff from the charge of undertaking to control, in violation of law, the purchase and sale of the expedients which must necessarily be employed in connection with the pin-fitting.

In *Lord, et al., v. Radio Corp. of America* (C. C. A. 3, 28 F. (2d) 257; certiorari denied, 278 U. S. 648), it was held that the condition for a license under a combination patent that the licensee should purchase one of the elements from the licensor was void and unenforcible as being in violation of Section 3 of the Clayton Act. So also in the present case, a condition that a car owner or the proprietor of a greasing station must purchase the gun and coupler from the plaintiff in order to get the right to inject grease into the patented pin-fittings is likewise void and unenforcible as being in violation of Section 3 of the Clayton Act. As the Third Circuit Court of Appeals said in that case (page 260):

> "The inclusion in a patented combination of an unpatented element does not give the patentee of the combination a monopoly of each element and the exclusive right to make, use and sell that element independent of the combination."

In other words, claims 14 and 15 of the patent in suit do not give the plaintiff here the exclusive right to make and sell to garages and public greasing stations the unpatented grease-guns and coupler elements of the patented combination.

Moreover the decision of the Third Circuit Court of Appeals in the case at bar, in the present case is in conflict with this Court's decision in the Carbice case (*supra*). In that case the patent was on a transportation package consisting of a protective casing of insulating material with solid carbon dioxide and a freezable product arranged in a certain relative position therein. The owner of the patent was engaged in the sale of solid carbon dioxide and restricted the use of such a package to those who purchased the carbon dioxide element from it. The case arose upon

the charge of contributory infringement against the defendant who had sold solid carbon dioxide for use in a transportation package like that described in the patent and this Court held that the patent owner could not use its patent as a basis for compelling the purchase from it of one of the unpatented elements embraced within the patent claim, citing *Morgan Envelope Co. v. Albany Paper Co.*, 152 U. S. 425.

This Court in its decision in the Carbice case has denied the attempted distinction between its earlier decision in the Morgan Envelope case in which the element furnished by the alleged contributory infringer was a passive element or in the nature of supplies and the Carbice case where the solid carbon dioxide was a dynamic element, holding that these distinctions are without legal significance and that the patent owner has no right to control the use of unpatented materials even though an element of a patented combination. So also in the present case the sale of the unpatented compressor and coupler cannot be monopolized by the owner of the combination patent and made a condition for the rightful use of the patented pin-fitting so that all manufacturers of grease compressors and couplers will be excluded from a market which will involve the application of grease from an ordinary grease-gun or compressor through a Gullborg patented pin-fitting.

ARGUMENT

Point III.

The claims in suit are fundamentally invalid because they purport to claim, and plaintiff has asserted them as claiming, an alleged "*combination*" of one device containing plaintiff's allegedly improved structural features; with three or four other separate and distinct and **admittedly** old and unpatentable devices which merely constitute the old environment in which plaintiff's improved device finds its utility and in which alleged "combination", like devices without the alleged constructional improvement, have also found their utility in the past.

Langen v. Warren Axe & Tool Co. (CCA 3); 184 Fed. 720;

In re Ratican, 1911 C. D. 267 (CCA Dist. of Columbia) 162 O. G. 540;

Backstay Co. v. Hamilton, 262 Fed. 411 (CCA 1);

Heald v. Rice, 104 U. S. 737;

General Electric v. Ohio Brass, 277 Fed. 917 (CCA 3);

Kodell v. Warren Telechron, 62 Fed. (2d) 692, (CCA 6);

Underwood v. Gerber, 149 U. S. 224.

The improper inclusion of the admittedly old and unpatentable complementary or environmental devices in the claims of the patent in suit in so-called "*combination*" with the other device containing plaintiff's allegedly improved structural features, was not an innocent mistake or inadvertence, but was obviously part of a carefully studied long-

range plan and scheme to develop, under the guise of a patent, the kind of monopoly expressly prohibited by Section 3 of the Clayton Act.

ARGUMENT

Point IV.

The Circuit Court of Appeals for the Third Circuit (as well as the District Court which it affirmed) has erroneously given the claims of the patent in suit a scope greater than the asserted invention

by holding on one hand that claims 1, 2, 3, 4 and 8 cover* any **old** (or new) bayonet type grease-cup or "pin-fitting" regardless of its construction, if such **old** (or new) grease-cup or "pin-fitting" is momentarily coupled with, connected to, or lubricated by plaintiff's "suction-effect" grease-gun as defined in these claims, and by holding on the other hand, that claims 14 and 15 cover* any **old** (or new) grease-gun, regardless of its construction (and including "**non**suction-effect" grease-gun) if such **old** (or new) grease-gun is momentarily coupled with or connected to plaintiff's "pin-fitting" forming the subject of its earlier-filed patent 1,307,-733 not in suit;

in direct conflict with the following decisions of the other Circuit Courts of Appeals adjudicating the patent here in suit:

Lyman, et al., v. Bassick, 18 Fed. 2nd, 29 (CCA 6);
Alemite v. Lubrair, 62 Fed. 2nd, 899 (CCA 1);
Hollingshead v. Bassick, 73 Fed. 2nd, 543 (CCA 6).

---

* on the theory of "contributory" infringement.

* On a theory of "contributory" infringement.

The Court of Appeals for the Sixth Circuit in *Lyman, et al., v. Bassick*; 18 Fed. 2nd, 29, adjudicated the patent here in suit against a series of six separate defendants in six separate suits, some of which defendants were making "bayonet" type grease-cups or so-called "pin-fittings" containing plaintiff's specific patented construction, and some of which were making grease-guns with the so-called "suction-effect" couplers. The Court of Appeals for the Sixth Circuit in that decision (though sustaining the claims of the Gullborg patent here involved) clearly indicated that claims 14 and 15 of the Gullborg patent were valid only if limited, by construction, to the "suction-effect" grease-gun disclosed in the Gullborg patent and that the claims 1, 2, 3, 4 and 8 were valid only if limited, by construction, to plaintiff's specific "pin-fitting" construction also disclosed in the Gullborg patent.

In that case (*Lyman, et al., v. Bassick*) a broader construction of the Gullborg claims was not necessary or required because the defendants there had appropriated the *gist* of plaintiff's alleged contribution to the old grease-gun, to wit, the "suction-effect" coupler and had also appropriated plaintiff's alleged contribution to the old bayonet type grease-cup or "pin-fitting" to wit, the peculiar disposition of the valve-closing spring between the valve-closure and the bayonet-pin.

Based chiefly upon a misconstruction of the opinion of the Court of Appeals for the Sixth Circuit in *Lyman, et al., v. Bassick*, 18 Fed. 2nd, 29, though in an apparent effort to follow that decision of the Sixth Circuit Court of Appeals, the Court of Appeals for the Second Circuit, and some District Courts, have since rendered decisions which are, in fact, in conflict therewith;—influenced, no doubt, by the fact that plaintiff urged or argued a misinterpretation of

said opinion the Court of Appeals for the Sixth Circuit in *Lyman, et al., v. Bassick, supra.*

Plaintiff's misinterpretation of the original opinion of the Court of Appeals for the Sixth Circuit in *Lyman, et al., v. Bassick,* was made possible by the fact that six different suits were determined by this one appellate opinion, and by the further fact that after the mandates went down some of the defendants (for reasons unknown) did not contest or consented to the entry of decrees in the District Court enjoining not only "suction-effect" grease-guns and infringing "pin-fittings," but enjoining also "**non**suction-effect" grease-guns and **non**-infringing "pin-fittings" on a broader construction of the claims than given in the appellate opinion, and on the theory of contributory infringement since then advanced by plaintiff in this and many other suits.

It was upon the strength of these final decrees in the District Courts (following a mandate) that the opinion of the Court of Appeals for the Sixth Circuit was successfully misconstrued by plaintiff in subsequent suits in which the Courts endeavored to follow said original appellate opinion of the Sixth Circuit or the opinion of some other Court which previously had followed said original opinion of the Sixth Circuit.

That the original opinion of the Court of Appeals for the Sixth Circuit in *Lyman, et al., v. Bassick,* 18 Fed. 2nd, 29, was not intended to be construed as plaintiff had urged in many courts thereafter, is evident from the more recent decision of the same Circuit Court of Appeals in *Hollingshead v. Bassick,* 73 Fed. 2nd, 543, wherein there were no defendants' "pin-fittings" involved at all, but in which there were involved two defendants' "**non**suctional" grease-guns (different from each other in detailed construc-

tion, however), and as to one of which "**non**suction-effect" grease-guns plaintiff conceded the "**non**suctional" character and charged infringement **only** of claims 14 and 15 which do not by their bare language recite the "suctional" feature.

In the recent decision of the Court of Appeals for the Sixth Circuit in *Hollingshead v. Bassick, supra,* that Court of Appeals clearly held that claims 14 and 15 *in order to be valid* must necessarily be limited to the "suction-effect" grease-guns or to grease-guns with a "suction-effect" coupler of the kind shown in the Gullborg patent;—the clear inference being that **unless so limited these claims are necessarily invalid as involving no invention.**

Plaintiff-respondent in its petition for writ of certiorari to this Court in said Hollingshead case which is now before this Court (under docket number 23 of the October Term, 1935, has **not** petitioned this Court to review that part of the decision of the Court of Appeals for the Sixth Circuit which has so limited claims 14 and 15 but has confined its petition for writ of certiorari wholly to a factual question relating to the Hollingshead's other grease-gun involved in said Hollingshead suit, to wit, whether said other grease-gun was, in *fact,* of the "suctional" or "**non**suctional" character.

By so avoiding this question as to the scope of claims 14 and 15, as now again determined by the Court of Appeals for the Sixth Circuit (in its petition for writ of certiorari to this Court), plaintiff has conceded the correctness of the decision of the Court of Appeals for the Sixth Circuit in *Hollingshead v. Bassick,* 73 Fed. 2nd, 543, as to the limitations which must be imposed upon the scope of claims 14 and 15 in order that they may be valid.

The Court of Appeals for the Sixth Circuit in *Hollingshead v. Bassick,* 73 Fed. 2nd, 543, did not have before

it for consideration any defendant's "pin-fittings", and, therefore, that Court was not required to and, therefore, did not determine that same question of law with respect to claims 1, 2, 3, 4 and 8. There can be no doubt however that the same principle of law is applicable to both groups of claims, and that if the Court of Appeals for the Sixth Circuit had had before it also a non-infringing "pin-fitting" on a charge of contributory infringement of the "suction-effect" grease-gun claims 1, 2, 3, 4 and 8, it would undoubtedly have likewise held that these claims must likewise be limited to plaintiff's specific "pin-fitting" construction, or that they are **not** infringed by a "pin-fitting" construction **not** embodying those structural features of "pin-fitting" in which plaintiff's asserted grease-cup novelty resides.

The Court of Appeals for the First Circuit in *Alemite v. Lubrair,* 62 Fed. 2nd, 899, reached a conclusion substantially the same as that reached by the Court of Appeals for the Sixth Circuit, that is, that the combination claims 14 and 15 are either limited to plaintiff's "suction-effect" grease-gun or if broadly construed are invalid.

The Court of Appeals for the First Circuit also clearly pointed out the conflict between plaintiff's broader contention and the Clayton Act and the decisions of this Court in the Carbice case, *supra,* and in the *United Shoe Machinery Corporation v. United States* case, 252 U. S. 451, 465, and the decision of the Court of Appeals for the Third Circuit in *Lord v. Radio Corporation,* 28 Fed. 2nd, 257.

Subsequent to the decision of the Court of Appeals for the First Circuit in *Alemite v. Lubrair,* 62 Fed. 2nd, 899, the defendant in that case (for reasons unknown) consented to a mandate and to a final decree holding claims 14 and 15 infringed by the **non**suctional grease-guns which in the

published opinion for the Court of Appeals for the First Circuit were held **not** to infringe these claims.

This court granted a writ of certiorari to the Court of Appeals for the Second Circuit in *Bassick v. Adams,* 52 Fed. 2nd, 36 (CCA 2);—the one appellate opinion which sustained plaintiff's broad contentions in the case at bar. Plaintiff-respondent settled this case out of court and the successful petitioner in that cause thereupon withdrew its appeal.

It is submitted that the decisions of the Courts of Appeals for the Sixth Circuit and the First Circuit above referred to are correct and well founded, and the correctness of such decisions is in effect conceded by plaintiff-respondent by:

a) plaintiff-respondent's failure to raise the question of the scope of claims 14 and 15 in its recently filed petition in this Court for writ of certiorari to the Court of Appeals for the Sixth Circuit in the case of *Hollingshead v. Bassick* (*supra*).

b) plaintiff-respondent's failure to petition this Court for a writ of certiorari in the case of *Alemite v. Lubrair,* 62 Fed. 2nd. 899, and its unusual disposal of that case out of court.

c) plaintiff-respondent's disinclination to permit the same question to be reviewed by this Court in the case of *Adams v. Bassick,* 285, U. S. 531.

ARGUMENT

Point V.

Except for plaintiff's repudiation of the originally asserted inventive basis of the claims of the patent in suit, by its wide-spread (many hundreds of suits) assertion of the claims in suit against the admittedly old and unpatentable devices and implements of the prior art;—the claims in suit might possibly have been saved from invalidity, and the patent thus salvaged for plaintiff for whatever intrinsic merit there may be in the allegedly improved structural features in one of the four devices recited in the claims; by following any one of the three lines of cases or decisions which, in infringement suits, have denied to plaintiffs the monopoly of the old and unpatentable devices without holding the claims invalid however;—

a) by either giving the generic reference to the old devices in the claims such a limited interpretation as would exclude from their scope the defendant's admittedly old devices, as was done in

Radio Corp. v. 20th Century Radio Corp., 19 Fed. (2nd) 290 (CCA 2);

International Banding Mach. Co. v. American Bander Co., 9 Fed. (2nd) 606 (CCA 2);

Hopkins-Hawley Co. v. Holden, 273 Fed. 424, (CCA 2);

Fowler-Wolfe Co. v. McCrum-Howell Co., 215 Fed. 905 (CCA 2);

Alemite v. Lubrair, 62 Fed. (2nd) 899 (CCA 1);

Hollingshead v. Bassick, 73 Fed. (2d) 543 (CCA 6).

or

b) by holding that the so-called "*combination*" claims would not be infringed by the defendant's sale of any old devices which may be included in the claims generically, but will be held infringed only if the defendant appropriates the inventive part of the claims or the **gist** of the claims as in the cases of

Harvey Hubbell v. General Electric, 267 Fed. 564 (CCA 2);

Morgan Envelope Co. v. Albany Paper Co., 152 U. S. 425; 38 L. Ed. 500;

Carbice Corporation v. American Patents Development Corp., 283 U. S. 27; 51 Sup. Ct. 334.

or

c) by holding that the unconditional purchasers of plaintiff's allegedly improved device have an implied license to purchase from others (including defendants) the old expedients or the old implements of prior art with which that improved device is normally used, as in the cases of

Edison Electric Light Co. v. Peninsular L. P. of H. Co., 110 Fed. 831 (CCA 6);

Thomson-Huston Electric Co. v. Illinois Tel. Constr., 152 Fed. 631 (CCA 7).

ARGUMENT

Point VI.

The case at bar is **not** one which would justify any indulgence in favor of the validity of the claims upon any one of the three types of holdings or decisions of non-infringement above set forth, but the Court is justified in striking at the root of the evil and holding the claims invalid under the well established principles set forth in

In re Ratican; 1911 C. D. 267; 162 O. G. 540 (Court of Appeals, D. C.)

Langen v. Warren Axe, 184 Fed. 720 (CCA 3);

General Electric v. Ohio Brass, 277 Fed. 917 (CCA 3);

Kodell v. Warren Telechron, 62 Fed. 2nd) 692 (CCA 6);

Underwood v. Gerber, 149 U. S. 224; 37 L. Ed. 710;

Carbice v. Patents Developments (on rehearing), 283 U. S. 420; 51 Sup. Ct. 496.

a) because the patent in suit was apparently not intended by plaintiff to be used for the purpose for which patents are intended, but was merely an instrument for the assertion and development of an illegal monopoly over a whole field of old and unpatentable devices;

b) because plaintiff has repudiated the inventive basis of the claims by suing manufacturers of admittedly old devices of the prior art;

c) because plaintiff has violated the spirit, if not in fact the letter, of the disclaimer statutes (R. S. Sec. 4917—U. S. C. Title 35, Sec. 65; and R. S. Sec. 4922—U. S. C. Title 35, Sec. 71) because sub-

sequent to the decision of the Sixth Circuit Court of Appeals in *Lyman et al., v. Bassick,* 18 Fed. (2nd) 29, holding **claim 12** of the patent here in suit **invalid** and giving **claims 1, 2, 3, 4, 7, 8, 14 and 15 a restricted** or limited interpretation, and while filing a formal disclaimer as to the invalidated claim 12, plaintiff continued to assert (in hundreds of suits based upon this patent) a monopoly far broader than that represented by the disclaimed claim 12, and far broader than the monopoly adjudged as plaintiff's under the other claims which were held valid by the Court of Appeals for the Sixth Circuit upon a limited interpretation.

d) because plaintiff, by taking literally hundreds of consent decrees and decrees pro confesso and broad injunctions based thereon; against financial inferior jobbers, dealers and tradesmen throughout the field and from coast to coast, and by thus automatically eliminating these hundreds of jobbers and dealers of automotive equipment, as trade outlets for the old and unpatentable and non-infringing grease-guns, has shown most forcefully the fallacy of endeavoring to salvage for plaintiff's benefit patent claims fundamentally invalid and violative of the essential principles of patent law and plaintiff has thus also shown most forcefully that an invalid patent or a patent whose scope is in reality limited, but whose claims are of improper form may become a distinct menace to an entire industry far beyond any of the many monopolistic schemes and trade-restraining schemes so far encountered by the courts under the Anti-Trust Laws.

ARGUMENT

Point VII.

The practical effect of sustaining plaintiff-respondent's contention as to the validity and scope of the claims in suit as urged in this case by plaintiff-respondent, is to perpetuate in plaintiff a monopoly of substantially **all** lubricating equipment, both in the automobile industry or in the automobile field as well as in the field of industrial and farm machinery, because the very same array of both **old** (or new or yet unborn) grease-guns can be monopolized by plaintiff almost indefinitely and without limit of time, merely by re-patenting the same **old** grease-guns in *combination with* either another hose-coupler or conduit-coupler containing any trivial coupler improvement, or another grease-cup or "fitting" containing some trivial internal improvement, or by re-patenting the same old grease-cup in combination with a new coupler and an old grease pump, and then through the commercial dominance already achieved in the field, bring about a quick distribution of the improved part and then charge others with contributory infringement by selling the old and unimproved parts, such as the old pump, or the old grease-cup, on the theory that such old devices would again inevitably be brought into use with plaintiff's improved coupler or improved grease-cup, as the case may be, and that such conjoint use would then make the seller of the same old grease-cup or the seller of the same old grease-gun again a *contributory* infringer under such newly patented "combination" claims.

That this would be the ultimate effect of sustaining plaintiff-respondent's untenable position with respect to the validity and scope of the claims in suit, will become

evident if the Court will take judicial notice at this time of the more recent and already extensive series of infringement suits which have been instituted by plaintiff-respondent under just such a collection of more recent patents, each of which re-patents the old combination of grease pump, hose, coupler and grease-cup; with some structural improvement in but one of these four devices; and the other three of the four devices or implements claimed in "combination" being again the same old pump, the same old hose, and the same old grease-cup covered by the patent here in suit. Thus, for instance, if the Court will refer to the record in Case No. 23 of the October Term of 1935 now pending before the Court, and entitled "The Bassick Manufacturing Company, Petitioner, versus The R. M. Hollingshead Company, Respondent", it will find that in that case the defendant was charged with contributory infringement, for instance, of claims 14 and 15 of Gullborg patent No. 1, 307,734 by virtue of its manufacture and sale of an old and unpatented grease-gun with an old unpatented bayonet coupler, and that precisely the same grease-gun, merely with an alternative or interchangeable nozzle was also charged to constitute contributory infringement of claims 2, 3 and 5 of Zerk patent No. 1,475,980 involved in this Hollingshead case, because the Zerk patent, though subsequent to the Gullborg patent No. 1,307,734, again re-patents the combination of pump, coupler, and grease-cup based again merely upon another structural improvement in the coupler or nozzle part of the old combination.

Likewise, in the District Court of the Western District of Pennsylvania, in equity suits Nos. 2983 and 3041, this same plaintiff-respondent is charging this same defendant-petitioner (and others) with contributory infringement of another one of plaintiff's many recent "combination" patents, to wit, Manzel patent No. 1,459,662, which re-pat-

ents the old combination of pump, coupler and grease-cup, and there again, the grease pump accused as constituting the "contributory" infringement, is the same grease pump which in the case at bar is accused as constituting the contributory infringement of claims 14 and 15 of the Gullborg patent No. 1,307,734 merely with another coupler member or nozzle member.

So too, in these same two suits in the Western District of Pennsylvania, this same defendant-petitioner is accused of contributory infringement of another one of plaintiff-respondent's still more recent "combination" patents, to wit, Butler patent No. 1,593,791, which again re-patents the old combination of pump, hose, coupler and grease-cup, and the charge there again is that defendant-petitioner sells an admittedly old grease-cup with the charged intention that such old grease-cup be used in conjunction with plaintiff-respondent's admittedly old grease pump having a certain allegedly improved hose-coupler of the Butler patent.

And so, the Court may take judicial notice of the already extensive litigation based upon many of plaintiff's other and much more recent "combination" patents, each in turn re-patenting the old combination of pump, hose, coupler and grease-cup, and each in turn based upon some constructional improvement in a coupler, or some constructional improvement in one of the other parts, to wit, Davis patent No. 1,401,765 of December 27th, 1921; Fesler patent No. 1,408,573 of March 7th, 1922.

Each of these patents and many others more recently issued to plaintiff, re-patents the old combination based upon improvement in one element, and each will further perpetuate into the more distant future, plaintiff's monopoly of the same grease pump and the same old grease-cup and the same old hose, if plaintiff-respondent's theory of "combination" claims, and if plaintiff's theory of "con-

tributory'' infringement is to prevail at one and the same time. The Davis and Fesler patents are cited among the many, because they happen to disclose and they broadly claim (in combination) precisely the same grease-cup disclosed in the patent here in suit, and specifically set forth in claims 14 and 15 of the patent here in suit, and also separately patented to plaintiff in Gullborg patent No. 1,307,733, not in suit.

The further practical effect of sustaining plaintiff-respondent's contentions in this case, would be not only to petpetuate in plaintiff-respondent the continued monopoly of the entire lubricating equipment industry which it now dominates almost one hundred percent, but also to open up every other industry or line of commerce to the development of similar monopolies based upon any trivial invention improperly claimed.

CONCLUSION

In conclusion, it is respectfully submitted that the decision of the Court of Appeals for the Third Circuit in the case at bar should be reversed, and that

a) the claims in suit must either be held invalid as not defining or as not limited to plaintiff's alleged inventive contributions, but as also improperly including many admittedly old devices or implements:

General Electric v. Ohio Brass, 277 Fed. 917 (CCA 3);

In re Ratican, 1911 C. D. 267; 162 O. G. 540 (C. C. A. D. of C.);

Langen v. Warren, 184 Fed. 720 (CCA 3);
Kodell v. Warren Telechron, 62 Fed. (2d) 692 (CCA 6);
Underwood v. Gerber, 149 U. S. 224.

b) or the claims must be held not infringed

1) either by construing the pin-fitting claims as though also limited to the specific suction-effect grease-gun disclosed in the patent, and by construing the suction-effect claims as also limited to the specific pin-fitting disclosed in the patent as in *Alemite v. Lubrair,* 62 Fed. (2d) 899 (CCA 1) and *Hollingshead v. Bassick,* 73 Fed. (2d) 543 (CCA 6).

2) or by holding the claims not infringed because defendants have admittedly **not** appropriated the **gist** or inventive part of the claims, in accordance with *Harvey Hubbell v. General Electric,* 267 Fed. 564 (CCA 2); *Morgan Envelope v. Albany Paper,* 152 U. S. 425; *Carbice v. American Patents Development,* 283 U. S. 27.

3) or by holding that the unconditional sale by plaintiff of its pin-fittings under its earlier patent No. 1,307,733 (not in suit) carries with it an implied license to connect with it any old grease-gun, though made by a competitor, and that plaintiff's unconditional sale of its suction-effect grease-guns sold by it under claims 1, 2, 3, 4 and 8 of the patent in suit, carries with it the implied license to use them on any old and **un**improved and **un**patentable bayonet-type grease-cups of competitors, in accordance with *Edison Electric v. Peninsular,* 110 Fed. 831 (CCA 6) and *Thompson Houston v. Illinois,* 152 Fed. 631 (CCA 7).

It is further respectfully submitted that in view of all the circumstances of the case and in view of the evils of improper claims, as demonstrated herein, the safer and sounder course is to strike at the root of the evil by holding the claims invalid because they clearly violate the first fundamentals of patent law, and are contrary to the essential purpose of the patent grant, and also because they are obviously intended (by plaintiff) not to secure an invention to the plaintiff, but to perfect in plaintiff (under the guise and cloak of an invention and Letters Patent) an illegal monopoly of old and unpatentable commodities which is expressly condemned by the Anti-Trust Laws of the United States.

Respectfully submitted,

LEONARD L. KALISH,
Attorney for Defendant-Petitioners.

57

APPENDIX.

OPINION OF THE CIRCUIT COURT OF APPEALS FOR THE 1st CIRCUIT IN ALEMITE V. LUBRAIR (62 FED. 2nd, 899).

January 3, 1933.

MORTON, J.:

This is a suit for contributory infringement of Patent No. 1,307,734 to Gullborg for lubricating means dated June 24, 1919. Only two claims are in suit, numbers 14 and 15. In the District Court the plaintiff moved for a temporary injunction on a record made up of *ex parte* affidavits filed by both sides, and various patents, drawings, and documents relating to the art. The District Judge denied the motion and the plaintiff appealed from the refusal to grant the injunction (Judicial Code, Sec. 129; 28 U. S. C. A., Sec. 227).

The objects of the invention are stated to be "to provide novel *coupling* (italics mine) means for connecting the grease-gun with parts to be lubricated," "to provide novel means for effectively sealing the joint between the coupling members," "to provide novel coupling members to be primariiy secured to the parts to be lubricated," and certain other objects which are at present immaterial. Gullborg also invented a grease-cup which was patented to him on the same date, June 24, 1919, the patent number 1, 307,733. The grease-gun described in the patent in suit has novel features and is designed to be used in connection with the grease-cup shown in the other patent.

At the time when Gullborg entered the field, pressure lubrication, by means of a grease-cup on the part to be lubricated and a grease-gun having a flexible connection adapted to engage the grease-cup, was well known. What Gullborg invented was an improved form of grease-cup, shown in the other patent to him, and an improved grease-gun to be used with his improved cup. The inventions were obviously by no means of primary character.

Pressure lubrication has become almost universal on automobiles. All leading makes of them are equipped with grease-cups adapted to be used with grease-guns. The defendant does not make or sell grease-*cups*. It makes and sells grease-*guns;* and it supplies them with a fitting which will engage the Gullborg cup but is not within the Gullborg patent. For present purposes the defendant's device may be regarded as something which *per se* anybody has the right to make and sell.

The claims in suit read as follows:

14. "The combination with a grease-cup comprising a tubular member having one end flanged inwardly to provide a closure seat, a closure, a pin extending through said tubular member and from both sides thereof, and a spring confined between said pin and closure, and tending to hold said closure on its seat, of a grease pump having a discharge conduit, and means coacting with the ends of said pin for detachably connecting the discharge end of said conduit with said grease pump."

15. "The combination with a grease-cup comprising a tubular member having a closure seat, a closure, a pin extending through said tubular member and from both sides thereof, and a spring confined between said pin and closure, and tending to hold said closure on its seat, of a grease pump having a discharge conduit, and means coact-

ing with the ends of said pin for detachably connecting the discharge end of said conduit with said grease-cup."

The gist of these claims is a combination of the Gullborg grease-cup patent 1,307,733 with any grease-gun. In other words, the plaintiff's contention is in effect that, if the owner of an automobile equipped with the Gullborg grease-cups buys and uses the defendant's grease-gun on them, he thereby creates the combination of the Gullborg patent in suit, and the defendant is liable for contributory infringement for supplying the grease-gun.

The important question is whether the combination of Gullborg's grease-cup with any grease-gun makes a patentable combination. In *Bassick Mfg. Co. v. Adams Grease Gun Corp.*, 52 Fed. (2d) 36 (C. C. A. 2), it was decided that this combination was patentable, reversing Judge Thacher, 26 Fed. (2d) 722, 724; 39 Fed. (2d) 904. Judge Westenhaver in the Northern District of Ohio, and Judge Hickenlooper in the Southern District of Ohio, made decisions on the question in accord with Judge Thacher's (Northern District, Eastern Division, Adjudication Book, Vol. 1, p. 11; Southern District, Western Division, Adjudication Book, Vol. 1, pages 43-44). **In Lyman Mfg. Co. v. Bassick Mfg. Co., 18 Fed. (2d) 29 (C. C. A. 6), the question was left open, with an intimation that such a combination would not be patentable.** In *Bassick Mfg. Co. v. United Grease Gun Corp.*, 40 Fed. (2d) 549, Judge Campbell in the District Court sustained the broad interpretation of claims 14 and 15. The patent has been much litigated and there are other decisions which it is unnecessary to refer to. The Supreme Court of the United States granted certiorari to the decision in *Bassick Mfg. Co. v. Adams, supra* (285 U. S. 531), but the case was settled before being heard. In the conflict of judicial opinion we feel free to follow our own views.

The Gullborg grease-cup is a separate invention, an independent entity. As above stated, it is the subject of a separate patent to him, and is fully covered by claims in that patent. It is not covered by any claim of the patent in suit, except as an element in a combination. The purpose of the Gullborg grease-cup is to afford a means of getting a lubricant under pressure into a bearing; it can be used with other kinds of grease-guns than those having the improved coupling of the patent in suit. The patent states that the Gullborg coupling operates somewhat differently and more efficiently than other couplings.

The ultimate question is whether, given this grease-cup, it would be a patentable invention to combine it with a grease-gun. "Claims are independent inventions" (*Leeds & Catlin v. Victor Talking Machine Co.*, 213 U. S. 301, 319). As has been said, pressure grease-cups were old in the art. All of them were intended to be used with a grease-gun, which could be temporarily connected to supply lubricant. **The combination of a Gullborg grease-cup with an unpatented grease-gun has no new action or advantage, except such as is furnished by the improved grease-cup.** It lacks the more effective action of the Gullborg cup and Gullborg gun. **Given the Gullborg cup we are unable to see any invention in combining it with a grease-gun, except perhaps with the Gullborg gun. The claims in suit seem to us clearly invalid unless restricted to such a combination.** In any event, the combination of the Gullborg cup with a grease-gun was within the scope of the patent on the cup, not of the patent on the improved gun. The case seems to us similar in principle to *Heald v. Rice*, 104 U. S. 737; *Underwood v. Gerber*, 149 U. S. 224; *Morgan Envelope Co. v. Albany Perforated Wrapping Paper Co.*, 152 U. S. 425, and *Carbice Corp. of America v. American Patents Development Corp.*, 283 U. S. 27. In the lower courts, *Edison*

Electric Light Co. v. Peninsular Light, Power & Heat Co., 101 Fed. 831, and *Radio Corp. of America v. Lord*, 28 Fed. (2d) 257; certiorari denied, 278 U. S. 648.

In *Heald v. Rice, supra,* at 755, it is said: "He uses Morey's device precisely as Morey's patent contemplated, and the Cornish boiler exactly as it was designed it should be used. And in the combination each operates separately, producing its own results. There was no inventive resource drawn upon to bring them together. Could not the owners of the patents for the straw-feeding attachment and return-flue boiler unite their machines and work them together, in defiance of a claim for the combination? To ask the question is to answer it. Yet the case supposed does not differ from the case as it exists; for the *public* owned the right to the Cornish boiler, and was entitled to every use to which a *patentee* (italics mine) owning it might lawfully apply it." Matthews, J. In *Underwood v. Gerber, supra,* one question was whether the *combination* of a newly-invented *coating* for making carbon paper (such as is used in typewriters), with *paper,* constituted a patentable claim. It was held it did not In *Morgan Envelope Co. v. Albany Paper Co., supra,* one claim in question was for a combination of the *toilet paper roll* described in a former patent, with *mechanism for the delivery* of the paper to the user in an economical manner. It was said: "No question is made but that the mechanism of these patents, by which the paper is served out to the user, involves a patentable novelty" (page 430). "The first defense raises the question whether, when a machine is designed to manufacture, distribute, or serve out to users a certain article, the article so dealt with can be said to be a part of the combination of which the machine itself is another part" (page 431). The question was not expressly decided, but the Court apparently regarded such a combina-

tion as unpatentable. **In our opinion the claims in suit must be restricted to the specific combination shown in the plaintiff's patent, i. e., to the combination of the Gullborg grease-cup with the Gullborg gun of the patent in suit. As so construed, the defendant does not infringe.**

The doubt about our conclusion is created by *Leeds & Catlin v. Victor Talking Machine Co., supra.* In that case one Berliner invented a new method of reproducing sounds by means of a new form of disc, which caused the reproducing stylus to move horizontally instead of vertically. He claimed this disc in combination with a reproducing stylus and machinery for propelling the disc—the well-known talking machine. The facts are not very clear, either in the report referred to, or in the reports of the case in the lower court. Apparently, the disc was not patented *per se;* nor was the machine, on which the disc was used, patented. The plaintiff relied on the combination claim as above stated. Leeds & Catlin manufactured discs (as they had the right to do) and sold them for use in machines which completed the combination of the claim. It was held that they were contributory infringers. In that case, the Court was dealing with a basic invention and with the means used to carry it out. The disc was useless except in combination with the reproducing mechanism. It was the combination which produced the result, and carried out the invention of the patent—a very different situation from that presented here where the combination alleged to infringe accomplishes no new result. The broad expressions in the opinion are to be read with the facts in mind, and as limited by the *Carbice Corp. case, supra.*

It is probable that under the Clayton Act (38 Stats. 730, Sec. 3) the plaintiff would not be permitted to impose as a condition of its licenses that its own grease-gun should be used with the Gullborg grease-cup—an indication of

public policy which furnishes a reason for not construing the patent to accomplish that result unless the law so requires. This is probably so irrespective of the statute. See *Carbice Corp., supra; United Shoe Machinery Company v. United States,* 258 U. S. 451-465, and *Radio Corp. of Am. v. Lord, supra.* It is highly undesirable that patents should be so construed and upheld as to give a monopoly on other things besides the subject-matter of the invention. *Carbice Corp., supra.* In our opinion the law of contributory infringement has been carried quite far enough in the public interest. We are not disposed to extend it. As Judge Lowell said in the District Court, referring to the plaintiff's contention, "It isn't what the patent was meant to be. It is contrary to the idea of patents." From what has been said, it follows that in our opinion the District Judge was right in refusing to grant the injunction.

The final question is whether the case should be left to go to final hearing, or whether we should dispose of it on the record before us. It is not like a new patent. We have the advantage of many previous decisions in which it has been discussed, and the questions before us have been considered and decided by other Courts. It is not improbable that the questions presented will have to be settled eventually by the Supreme Court, as is indicated by the grant of certiorari in *Adams Grease Gun Corp. v. Bassick, supra,* 285 U. S. 531. The evidence before us on the question of the validity of the claims in suit appears to be complete. Our view, whether right or wrong, is clearly held. On the facts before us, the plaintiff's case is in our opinion unmeritorious and the bill ought to be dismissed. Such action ought not, however, to be taken as long as there is any question as to the practical completeness of the plaintiff's evidence. We will deal with the matter as we did in

Vulcan Soot Cleaner Co. v. Amoskeag Mfg. Co., 255 Fed. 88.

The present appeal is dismissed with costs to the appellee.

Unless within ten days the plaintiff suggests to this Court that it desired to present in the District Court further, specified proofs to meet our present findings on the merits, an order will also direct the District Court to enter a final decree dismissing the bill with costs to the defendant. If such suggestion is made, the additional proofs which the plaintiff desires to present will be considered, and we will then determine what the final disposition of the case should be.

Decree accordingly.

PLAINTIFF'S SUGGESTIONS OF FURTHER PROOFS IN ALEMITE v. LUBRAIR (62 Fed. 2nd 899).

Now comes the plaintiff, Alemite Corporation, pursuant to the opinion of this court, dated January 3, 1933, and suggests the submission before the District Court of evidence in the form of certified copies of records, expert testimony, demonstrations, models, and paper and physical exhibits, to establish the further proofs specified herein as follows:

(1) That the requirements for a successful lubricating system of the Gullborg type for automobiles are extremely onerous; that they include the provision of fittings, compressor and coupler means that can be connected and disconnected rapidly and successively many times without undue fatigue; that the fittings must be of small size and adapted for application to all of the chassis bearings; that the coupler and fittings must be of small size and adapted

for application to all of the chassis bearings; that the coupler and fitting must be capable of use by people with no mechanical training or ability and must be capable of effecting in their hands a perfect and automatic seal capable of withstanding thousands of pounds of lubricant pressure; that this seal must be maintained unimpaired throughout the operation of the lubricant compressor; and that the prior art does not meet these requirements and could not be made to do so without the exercise of invention.

(2) That the devices shown in the three patents referred to in the defendant's brief and in the defendant's oral argument; *i. e.*, British patent to Alley, No. 21,893; Winkley reissue Patent No. 14,667; and Snyder and Reed Patent No. 1,041,524, are incapable of meeting these requirements; and that they were never used for this purpose prior to the advent of the Gullborg lubricating equipment.

(3) That the British patent to Alley is merely a device for eliminating the old method of filling grease-cups by hand; that it was not intended to force lubricant under pressure to bearings; that it does not have sealing means capable of preventing the escape of lubricant under high pressure; that it could not be used to reach many of the bearings on an automobile chassis; that the screw-threaded type of connection between the nipple and compressor shown in Alley's drawing would be tedious to operate and unsuitable for the lubrication of automobiles; that the Alley device could not be successfully produced commercially with a bayonet joint capable of withstanding high pressure; and that the device shown in this Alley patent could not be changed into a satisfactory lubricating system of the Gullborg type without complete reconstruction and the exercise of invention.

(4) That the device shown in the Winkley patent relies upon a spring-pressed sealing member to prevent leakage between the grease-gun and the fitting; that, if the spring for this member were made strong enough to withstand the pressure which the defendant advertises its gun will produce, it would be impossible to connect Winkley's coupler and fitting without the use of special tools; and that the Winkley device could not be adapted for use with high pressure guns of the defendant's type without complete reconstruction and the exercise of invention.

(5) That the device shown in the Snyder and Reed patent is intended to fill gear casings and similar housings for holding a large quantity of lubricant; that the tip or tube 12 formed on the end of the hose of the grease-gun shown in this patent is not intended or adapted for making a lubricant tight seal with a fitting attached to a bearing; and that the device shown in this patent could not be reconstructed to correspond to the claims in issue without the exercise of invention.

(6) That the prior art couplings designed for use with garden hoses, flexible pipe connections for the heating systems of trains, fire hoses and similar purposes, are intended for use under circumstances entirely different from those obtaining in the high pressure lubrication of automobile bearings; and that these prior art hose couplings are not adapted for high pressure greasing systems and could not be modified to adapt them for such use without the exercise of invention.

(7) That the defendant's coupler is different from any coupler known to the art prior to Gullborg; and that the defendant's coupler incorporates improvements taught by Gullborg's invention.

(8) That the invention of the claims in issue is peculiarly adapted to the lubrication of the bearings of automobiles under high pressures of the order developed by the defendant's gun; that a new result is attained when Gullborg's pin-fitting is connected with a non-suction effect bayonet coupler and high pressure grease-gun; that the prior art structures are not so adapted and were never so used; and that the prior art structures could not be so used on a commercial basis without radical reorganization requiring a high degree of invention.

(9) That the art prior to Gullborg fails to disclose a bayonet joint connection adapted for commercial exploitation in equipment for lubricating automobiles and capable of withstanding the pressures developed by defendant's grease-gun.

(10) That the Gullborg equipment was first introduced on the market in a small way without the aid of strong financial backing or extensive advertising; that the Gullborg equipment immediately attained great commercial success in spite of the fact that it cost more than the equipment which it replaced; and that this success was due solely to the merit of the equipment and not to high pressure salesmanship.

(11) That the file-wrappers and contents of Gullborg Patents Nos. 1,307,733 and 1,307,734 show that the claims in issue were originally presented and allowed in the application which resulted in Patent No. 1,307,733; that the Patent Office intended these claims to be of sufficient breadth to protect the combination disclosed in Gullborg Patent 1,307,733; and that these claims should not be limited to the details of the coupler disclosed in patent 1,307,734.

(12) That when the Court of Appeals for the Sixth Circuit rendered its decision in *Lyman Manufacturing Company v. Bassick Manufacturing Company,* 18 Fed. 2, 29, it had before it non-suction effect couplers made by The O. K. Manufacturing Company; that these non-suction effect couplers were enjoined by the decree entered by his Honor Judge Hickenlooper of the District Court pursuant to the mandate of the Court of Appeals for the Sixth Circuit; and that this opinion ofthe Sixth Circuit Court of Appeals supports the broad interpretation of claims 14 and 15 of Gullborg Patent 1,307,734 which is urged by the plaintiff.

Attention is directed to the fact that the defendant's answer sets up a counter-claim charging the plaintiff with infringement of United States letters patent to Evans, No. 1,634,458, and that a final hearing in the District Court will be necessary to determine the merit of this counter-claim. It is submitted that the plaintiff should be permitted to introduce the foregoing proofs at this final hearing.

Respectfully submitted,

LYNN A. WILLIAMS,
Attorney for Plaintiff.

OPINION OF THE COURT ON PLAINTIFF'S SUGGESTION OF FURTHER PROOFS IN ALEMITE v. LUBRAIR.

January 31, 1933.

PER CURIAM:

The further proofs suggested by the plaintiff do not affect the points on which our decision rested. It is, however, possible that if, as seems not unlikely, the case should go to the Supreme Court, that court might find them more significant than we do. We are, therefore, of opinion that the case should stand for final hearing in the District Court, which hearing should be held at the earliest practicable time and without regard to engagements of counsel in cases outside this Circuit.

The decree of the District Court is affirmed with costs to the appellee.

SUPREME COURT OF THE UNITED STATES

OCTOBER TERM, 1935

No. 31.

G. S. ROGERS, doing business as **REX DUPLEX FITTING COMPANY**, and **R. W. DUSENBERRY**,
Defendant-Petitioners.

vs.

ALEMITE CORPORATION,
Plaintiff-Respondent.

BRIEF ON BEHALF OF PLAINTIFF-RESPONDENT.

LYNN A. WILLIAMS,
ALBIN C. AHLBERG,
Counsel for Plaintiff-Respondent,
2300 Board of Trade Building,
Chicago, Illinois.

Eastman Bros., Inc., Law Printers, 542 S. Dearborn St., Chicago.

INDEX AND SUMMARY OF ARGUMENT.

I. The petitioners now tacitly concede the correctness of the decisions of the lower courts upon the *only* question which was in issue before them, but they now invite this court to consider and decide some new issues which were never pleaded, never argued or decided in the lower courts, and never made the subject of the petition for writ of certiorari 1

II. A detailed showing of the *de novo* character of the case now attempted to be presented in this court upon questions formally abandoned or not pleaded or not raised or discussed or decided in the lower courts, or not in any event available in defense to a claim of patent infringement 11

1. The petitioners' complete abandonment in this court of the only defense which was in issue in the District Court 11

A brief résumé of all of the testimony taken at the trial 13

Plaintiff's testimony 13
Don Alexander 14
Robert H. Kidd 14
Marvin Walkow 15
Edwin J. Balluff 16
Nelson Cornell 17
M. K. Ulrich 17
Thomas H. Bryson 17
Elwood Hansmann 18

Defendant's testimony 19
Patrick C. Gasparin 19
R. W. Dusenberry 19
J. Roy Van Kirk 20
C. L. W. Trinks 20
Don Alexander 20
Elwood Hansmann 21

This resume of the testimony reveals that none of the issues now asserted in this court was presented to the trial court..... 21

2. In the District Court and in the Court of Appeals, the petitioners expressly admitted the validity of the claims of the Gullborg patent in suit; this court is asked *de novo* to find that this Gullborg patent is not valid..... 22

This court will not pass upon an afterthought issue not raised or considered in the lower courts and urged in this court for the first time 25

This court will not consider a question not raised in and by the petition for writ of certiorari 27

3. The petitioners contend in this court for the first time that they were impliedly licensed by the plaintiff-respondent. This defense of "license" was not pleaded. Neither party offered any evidence relative to it. Neither the District Court nor the Court of Appeals was asked to consider it..... 28

The Supreme Court will not consider a defense which has not been pleaded..... 32

4. This court will not consider the petitioners' contention that the plaintiff's use of its patent "is violative of the spirit and letter of the Anti-Trust Laws and particularly Section 3 of the Clayton Act, 38 Stat. L. 731," because (1) this defense was not pleaded, (2) neither party offered nor had an opportunity to offer any evidence relative to it, and (3) alleged violations of the Anti-Trust Laws may not be urged as a defense to a claim of patent infringement..... 32

5. The grounds upon which the petitioners now urge "non-infringement" in this court are entirely different from those upon which they urged "non-infringement" in the lower courts..... 35

III. There is no merit in any of the petitioners' new theories of non-infringement; which theories are presented to this Court for the first time during the course of this suit 36

The invention and claims of the Gullborg patent in suit 36

The infringing mechanisms and the application of claims 1, 2, 3, 4 and 8, and the application of claims 14 and 15 thereto 44

No court is warranted in rewriting a patentee's combination claims to incorporate additional elements which the patentee chose not to include 47

1. Petitioners' theory of "non-infringement," if sustained, would limit every patent to precisely that which is illustrated, and that alone 51

2. There is no warrant for the application of the petitioners' new theory that the Court should relieve the defendant-petitioners of liability for infringement "by giving the generic reference to the old devices in the claims such a limited interpretation as would exclude from their scope the defendants' admittedly old (*sic*) devices" 54

Petitioners' assertion that Gullborg patent in suit No. 1,307,734 must be narrowly interpreted (or held invalid!) in view of the issue of another patent No. 1,307,733 to the same Gullborg on the same day, is utterly unwarranted 55

No "file-wrapper" estoppels exist or are even alleged to exist 65

3. The defendant-petitioners' third theory of "non-infringement" is wholly new in this court. It is non-existent in the law of patents. It is not found in or supported by the cited authorities. It is repugnant to established law, and incapable of application 66

IV. A general answer to the petitioners' generalities 77
V. Comment relative to petitioners' brief 82
VI. In conclusion 86

Cases Cited.

Albert Klein *v.* Nathan C. Russell, 86 U. S. 433, 463, 22 L. Ed. 116, 124 26
Alemite *v.* Lubrair, 62 Fed. (2d) 899 83
Alice State Bank *v.* Houston Pasture Company, 247 U. S. 240, 62 L. Ed. 1096, 1098 28
Backstay Machine & Leather Co. *v.* Hamilton, 262 Fed. 411 85
Badger *v.* Ranlett, 106 U. S. 255, 258, 27 L. Ed. 194, 196 25
Bassick *v.* Adams Grease Gun Corporation, 52 Fed. (2d) 36 21
Bassick *v.* Ready Auto Supply Company, 22 Fed. (2d) 331 21
Bassick *v.* United Grease Gun Corporation, 40 Fed. (2d) 549 21
Bates *v.* Coe, 98 U. S. 31, 47, 25 L. Ed. 68, 74 32
Benjamin F. Johnson *v.* Manhattan Railway Co., 289 U. S. 479, 494, 77 L. Ed. 1331, 1343 27
Ben W. Steele *v.* J. H. Drummond, 275 U. S. 199, 203, 72 L. Ed. 238, 239 27
Bresnahan et al. *v.* Tripp, 102 Fed. 899, 900 51
Brown *v.* Guild, 90 U. S. 181, 221, 23 L. Ed. 160, 169 53
Brown Saddle Co. *v.* Troxel, 98 Fed. 620, 621 34
Carbice Corporation *v.* American Patents Development Corp., 283 U. S. 27 ..... 70, 74, 76, 85
Claude Neon Lights, Inc. *v.* Machlett & Sons, 27 Fed. (2d) 702 58
David Burnet *v.* Commonwealth Improvement Co., 287 U. S. 415, 417, 77 L. Ed. 399, 402 25
Dr. Miles Medical Co. *v.* Platt, etc., 142 Fed. 606, 610 34

Edison Electric Light Co. *et al. v.* Sawyer-Man Electric Co., 53 Fed. 592 34
Fraser *v.* Duffey *et al.*, 196 Fed. 900, 903 34
General Talking Pictures Corp. *v.* Stanley Co., 38 Fed. (2d) 355 30
George F. Potter et al. *v.* United States, 107 U. S. 126, 131, 27 L. Ed. 330, 332 32
George M. Wheeler *v.* John Sedgwick, 94 U. S. 1, 24 L. Ed. 31, 32 26
Gibbs *v.* Triumph Trap Co., 26 Fed. (2d) 312 58
Great Northern Railway Co. *v.* United States, 208 U. S. 452, 52 L. Ed. 567, 577 25
Green County *v.* Thomas' Executor, 211 U. S. 598, 53 L. Ed. 343, 345 25
Gunning *v.* Cooley, 281 U. S. 90, 98, 74 L. Ed. 720, 726 27
Harvey Hubbell, Inc. *v.* General Electric Co., 267 Fed. 564 70
Hathaway & Co. *v.* United States, 249 U. S. 460, 464, 63 L. Ed. 707, 709 25
Heald *v.* Rice, 104 U. S. 737 85
Houghton et al. *v.* Jones, 68 U. S. 702, 705, 17 L. Ed. 503, 504 26
Independent Baking Powder Co. *v.* Boorman, 130 Fed. 726, 727 35
Insurance Co. of Valley of Virginia *v.* Mordecai, 63 U. S. 111, 16 L. Ed. 329, 332 26
James C. Bell et al. *v.* Matthias Bruen, 42 U. S. 169, 187, 11 L. Ed. 89, 96 26
James C. Davis *v.* J. M. Currie, 266 U. S. 182, 183, 69 L. Ed. 234 27
Johns-Pratt Co. *v.* Sachs Co. *et al.*, 176 Fed. 738, 739 34
Kodel *v.* Warren Telechron, 62 Fed. (2d) 692 85
Langan *v.* Warren Axe & Tool Co., 184 Fed. 720 85
Leeds & Catlin *v.* Victor, 213 U. S. 301, 325 ..... 3, 67, 76
Lyman *v.* Bassick, 18 Fed. (2d) 29 ..... 21, 64, 67
Minnich *v.* Gardner, 292 U. S. 48, 53, 78 L. Ed. 1116, 1119 25
Morgan Envelope Co. *v.* Albany Perforated Wrapping Paper Co., 152 U. S. 425 ..... 70, 72

Motion Picture Patents Co. *v.* Eclair Film Co., 208 Fed. 416 35
Motion Picture Patents Co. *v.* Ullman, *et al.*, 186 Fed. 174, 175 35
Pangborn Corporation *v.* Sly Mfg. Co., 284 Fed. 217 51
Parsons *v.* Seelye, 100 Fed. 455 50
Puetz *v.* Bransford, 31 Fed. 458 29
Radio Corporation of America *et al. v.* Majestic Distributors, Inc., 53 Fed. (2d) 641, 642 33
Radio Corporation *v.* Duovac Radio Tube Corporation, 6 Fed. Supp. 275 34
Ratican, *In re*, 1911 C. D. 267, 162 O. G. 540 85
Sanitary Refrigerator Co. *v.* Winters, 280 U. S. 30, 34, 74 L. Ed. 147, 152 27
Sandy MacGregor Co. et al. *v.* Vaco Grip Co., 2 Fed. (2d) 655 58
Skelton *v.* Baldwin Tool Works, 58 Fed. (2d) 221 49
Smith *v.* Snow, 294 U. S. 1 53
Southern Textile Machinery Co. *v.* United Hosiery Mills Corp., 33 Fed. (2d) 862 ..... 57, 58, 60
Strait *et al. v.* National Harrow Co., 51 Fed. 819, 820 33
Suffolk Mfg. Co. *v.* Hayden, 3 Wall. 315, 18 L. Ed. 76 63
Supervisors *v.* Lackawanna Iron and Coal Co., 93 U. S. 619, 23 L. Ed. 989, 991 26
Symington Co. *v.* National Malleable Castings Co., 250 U. S. 383 48
Thomson-Houston *v.* Ohio Brass, 80 Fed. 712 68
Traitel Marble Co. *v.* U. T. Hungerford Brass & Copper Co., 22 Fed. (2d) 259 ..... 58, 61
Underwood *v.* Gerber, 149 U. S. 224 85
United States *v.* American Tobacco Co., 166 U. S. 468, 479, 41 L. Ed. 1081, 1085 25
United States Fire Escape Counterbalance Co. *v.* Joseph Halsted Co., 195 Fed. 295 35
United States *v.* LaFranca, 282 U. S. 568, 75 L. Ed. 551, 557 25
United States *v.* Thomas O. Larkin et al., 59 U. S. 557, 561, 15 L. Ed. 485, 487 26

Virtue *v.* Creamery Package Mfg. Co., 227 U. S. 8, 38, 57 L. Ed. 393, 407 25
Webster Electric Co. *v.* Splitdorf Electrical Co., 264 U. S. 463, 464, 68 L. Ed. 792, 793 28
Western Electric Co., Inc., *et al. v.* Wallerstein, 48 Fed. (2d) 268 33
White *v.* Dunbar, 119 U. S. 47, 52, 30 L. Ed. 303, 304 53
Wm. B. Scaife & Sons Co. *v.* Falls City Woolen Mills, 209 Fed. 210 31

Statutes Cited.

Revised Statutes, Sec. 4888 (U. S. Code, Title 35, Sec. 33) 51
Revised Statutes, Sec. 4886 (Title 35, Sec. 31, U. S. Code) 56
Walker on Patents, Sixth Ed., page 738 29

SUPREME COURT OF THE UNITED STATES

OCTOBER TERM, 1935.

No. 31.

G. S. ROGERS, doing business as **REX DUPLEX FITTING COMPANY**, and **R. W. DUSENBERRY**,
Defendant-Petitioners.

vs.

ALEMITE CORPORATION,
Plaintiff-Respondent.

BRIEF ON BEHALF OF PLAINTIFF-RESPONDENT.

I.

The Petitioners Now Tacitly Concede the Correctness of the Decisions of the Lower Courts Upon the Only Question Which Was in Issue Before Them, But They Now Invite This Court to Consider and Decide Some New Issues Which Were Never Pleaded, Never Argued or Decided in the Lower Courts, and Never Made the Subject of the Petition for Writ of Certiorari.

Ever since the Gullborg patent No. 1,307,734 in suit (R., p. 259) was issued on June 24, 1919, the plaintiff-respondent has been engaged in the manufacture and

sale of the so-called "Alemite" lubricating system in a form substantially identical with that illustrated and described in the patent.

In accordance with the invention of this patent each bearing of an automobile or other machine is provided with a lubricating hole, and into the outer end of each hole is permanently screwed a "pin fitting." The coupler part of a grease compressor is adapted for attachment in succession to each of the several pin fittings, whereby grease may be forced from the grease gun part of the combination through the coupler and the pin fitting and thence on into the bearing. When one bearing has been greased, the coupler is detached from the associated pin fitting and then attached to the pin fitting of the next bearing. In this way the single compressor is used to force grease into all of the bearings of the automobile in succession.

The claims of the Gullborg patent describe the various parts making up the complete combination of grease gun, coupler and pin fitting.

It is only the ultimate user who attaches the coupler of the grease compressor to the pin fitting associated with a bearing. It is only the ultimate user, therefore, who assembles the complete combinations of the claims of the patent.

To facilitate the attachment of the coupler some bearings must be equipped with "straight" fittings, some with "90° elbow" fittings, some with "45° elbow" fittings, etc. Some users are best served by compressors of small size, while others are best served by compressors of larger size. It is therefore advantageous and practically necessary to the ultimate users for the manufacturer to list and sell the various forms

of pin fittings and the various sizes of compressors separately, thus leaving it to the user to purchase the assortment best suited to his needs (Rec., p. 19).

In this respect the invention of the Gullborg patent is of an unusual character. The phonograph is the only close parallel. The Victor Company's Berliner patent involved in *Leeds & Catlin* v. *Victor,* 213 U. S. 301 and 213 U. S. 325, claimed the combination of the Victor Company's disc record and the tone arm and stylus of the phonograph machine. Various sizes and styles of phonograph machines were sold in great numbers by the Victor Company, as also a wide assortment of "records." Some users wanted Grand Opera records, others wanted Jazz tunes. Each purchaser was free to buy a large phonograph or a small one, and then separately to buy such an assortment of records as might suit his fancy. It was, however, only the ultimate user who ever brought together the complete combinations of the claims of the Berliner patent.

Leeds & Catlin made and sold the disc records of the Berliner combination. They were purchased by the owners of Victor talking machines and used in combination with the swinging tone arm and stylus of those machines as described in the claims of the Berliner patent. Leeds & Catlin were held to be contributory infringers of the Berliner patent because they sold the disc record part of the complete combination with the expectation and intention that the purchasers would combine this part with the other parts of the combination which had been sold by the Victor Company.

To camouflage the real intent with which Leeds & Catlin sold their disc records, they devised and manufactured, and to a slight extent sold, a phonograph machine which did not have the swinging tone arm of

the Victor patent, but in which the stylus was advanced by a screw thread feed. In accordance with the Berliner invention the stylus was advanced by the groove in the disc record, and the tone arm was mounted to swing freely in such a way as to permit this advancement of the stylus by the groove. When, as in the Leeds & Catlin machine, the stylus was not advanced by the groove of the disc record, but rather by the lead screw, the claims of the patent were avoided. Since, however, Leeds & Catlin's records found their principal market for use in connection with the Victor Company's talking machine, the further sale of these records was enjoined, and this despite the fact that when and if the Leeds & Catlin records were used in combination with the Leeds & Catlin screw feed machine, there would be no embodiment of the Berliner invention, and therefore no infringement of the claims of the Berliner patent.

This suit presents a close parallel. The defendants sold the fitting parts of the complete combination of the Gullborg patent with the expectation and intention that the purchasers would in use combine them with the compressor parts which had been sold by the plaintiff-respondent. The defendant-petitioners, Rogers and Dusenberry, also sold compressor and coupler parts of the complete combination with the expectation and intention that the purchasers would combine them with the pin fitting parts which had been sold by the plaintiff-respondent.

The pin fittings sold by Rogers and Dusenberry differed a little from the pin fittings sold by the Alemite Corporation. So also the compressor and coupler parts sold by Rogers and Dusenberry differed somewhat from the compressor parts sold by the Alemite Corporation.

Nevertheless, when the Rogers fitting was combined with the Alemite compressor there was a complete and perfect embodiment of certain of the claims of the Gullborg patent. When, on the other hand, the Alemite pin fittings were combined with the Rogers compressor and coupler, there was a complete and perfect embodiment of certain other claims of the Gullborg patent.

This was due to the fact that some of the claims of the Gullborg patent were relatively broad in their description of the pin fitting parts and relatively narrow in their description of the coupler parts of the whole, while other claims were relatively narrow in their description of the pin fitting parts and relatively broad in their description of the coupler parts of the combination. This variance in the scope with which the several parts of the complete combination were defined by the several claims of the patent, was in recognition of the fact that some of the advantages of the invention could be secured even if fittings of an inferior form were used, and that some of the advantages could be secured even when the coupler used was of an inferior form.

The Gullborg invention was in this respect like most inventions. There is a very best form. But the invention can be embodied in more or less inferior forms. The inferiority may appear in one part or it may appear in some other part of the entire combination. It is these considerations which have led inventors and their patent solicitors to draw a series of counts or claims of differing scope. Some claim is relatively specific as to one feature and relatively generic as to others, while another claim is relatively broad as to the first feature and relatively specific as to the second.

What the defendant-petitioners did was to make a fitting and to make a compressor which, if used together, could be asserted not to embody all of the details of any one claim of the Gullborg patent.

All of the parts were, however, given precisely such form, size and dimensions that they could be perfectly interchanged with and substituted for the corresponding parts of the Gullborg system as manufactured and sold by the Alemite Corporation. If it had been the real purpose and intention of Rogers and Dusenberry to have their fittings used only in combination with their compressors, they could easily have made their coupler and fitting parts a sixty-fourth of an inch larger in diameter or smaller in diameter. They could easily have made the distance from the pin to the head a sixteenth of an inch longer or a sixteenth of an inch shorter. Any of these or like departures from the exact dimensions of the Alemite equipment would have prevented interchangeability and conjoint use. In this event, however, the owner of an Alemite compressor could not "increase his repertory" by purchasing Rogers and Dusenberry fittings. He could not have lubricated his Alemite-equipped bearings by purchasing a Rogers and Dusenberry compressor.

What Rogers and Dusenberry wanted was the opportunity to sell their fitting parts and their compressor parts for use in combination with the other parts which were sold by the Alemite Corporation. Consequently the Rogers and Dusenberry parts were given precisely such dimensions as would insure the requisite interchangeability.

In the trial of the case in the District Court the testimony was directed exclusively to the question whether Rogers and Dusenberry were selling their parts with

the expectation and intention that the purchasers would combine them in use with the other parts sold by the Alemite Corporation. Rogers and Dusenberry contended that they sold all of their parts with the intention, and indeed with the instruction, that their fittings should be used only in conjunction with their compressors, and that their compressors should be used only in conjunction with their fittings. The Alemite Corporation offered evidence to show not only that the Rogers fittings could and would be used with the Alemite compressors, but that they had in many instances been sold under circumstances which could leave no doubt of that intention and expectation on the part of Rogers and Dusenberry. The Alemite Corporation offered like evidence as to the expectation and intention with which Rogers and Dusenberry sold their compressors.

The District Court decided that Rogers and Dusenberry had made all of their parts of such form and dimensions that they could be combined with the other parts of the combination as sold by the Alemite Corporation, and that they had been manufactured and sold with the expectation and intention that the purchasers would so combine them. (R., p. 127.)

It was the contention of the Alemite Corporation that the sales of these parts with such knowledge, expectations and intentions on the part of Rogers and Dusenberry was a contributory infringement of the Gullborg patent. It was the contention of Rogers and Dusenberry that they sold their parts with such other and different expectations and intentions that there was no contributory infringement.

This was the case in the District Court.

This was the case in the Court of Appeals.

Both courts decided the questions at issue in favor of the plaintiff-respondent.

Now let us compare this case, as decided by the lower courts, with the case which Rogers and Dusenberry present to this Court.

Nowhere in the petitioners' brief in this Court is it contended or even suggested that the petitioners did not sell their parts of the combination with the expectation and intention that the purchasers would combine them with the other parts which had been sold by the respondent. What the petitioners do now say in this Court is:

(1) That the Gullborg patent is invalid;

(2) That the plaintiff is violating "the spirit and the letter of the Anti-Trust Laws, and particularly Section 3 of the Clayton Act, 38 Stat. L. 731" (Petitioners' Brief, p. 30); and

(3) That the Alemite Corporation has impliedly licensed Rogers and Dusenberry to sell both the fitting parts and the compressor and coupler parts of the Gullborg combination.

None of these defenses was pleaded and advanced in the District Court, nor in the Court of Appeals. At the very outset of the trial in the District Court, and again in response to a specific inquiry by the Court, Rogers and Dusenberry expressly admitted and conceded the claims of the Gullborg patent to be valid. (R., pp. 98, 127.) No evidence was, therefore, offered by either party upon the question of the validity or invalidity of the Gullborg patent. No arguments were ever addressed to this question.

The plaintiff-respondent's alleged violations of the Clayton Act were not pleaded. Neither party offered any evidence upon the subject. The Anti-Trust Laws provide certain remedies for their violation. But such

violations cannot become a defense to a suit alleging patent infringement.

The defense of a license to Rogers and Dusenberry was not pleaded. The matter was not made the subject of any evidence by either party. The question was not advanced or argued in the lower courts.

Not one of these defenses is even suggested in the assignments of error. (R., pp. 131-132.)

On the other hand, all of the arguments advanced in this Court on behalf of the petitioners hinge upon one or more of these three contentions that the claims of the Gullborg patent are invalid, that the defendants are licensed, and that the plaintiff-respondent has violated the Clayton Act.

This Court is asked to decide these questions *de novo,* and to do so in a case where the questions were not put in issue by the pleadings, and in a case therefore where no evidence was directed by either party to the questions which this Court is now asked to decide.

The defense of non-infringement which the petitioners urge in this Court is based entirely upon the wholly new contention that all of the claims in suit of the Gullborg patent are invalid as they stand. It is at least tacitly conceded that the defendants contributorily infringed all of these claims as they appear in the patent in suit.

The argument is, however, that the claims are invalid. Wherefore, the Court is invited to rewrite the claims of the Gullborg patent into a narrow form by incorporating into them several new and additional elements. The Court is then invited to give to the new claims with these additional elements, an interpretation so narrow as to limit the claims to all of the details of all of the parts, precisely as shown in the drawings of the Gullborg patent.

When the enumerations of all of these elements and details are substituted for the claims as they exist in the Gullborg patent, then and then only are counsel for the petitioners in a position to urge, as they do, that there has been no infringement.

Even if it were permissible under the law, the addition of new elements to the claims of the patent in suit and the elimination of any range of equivalents for these several elements, are not required because of any patents or publications or inventions in the art prior to Gullborg as disclosed in the record in this case. They are not required because of any estoppels resulting from the prosecution of the application for the patent in suit. The history of the prosecution of the Gullborg patent is not even alluded to by counsel for the petitioner. The sum total of the "prior art" is represented by the Seng French patent No. 468,869, which appears on pages 272 to 275 of the record without even the courtesy of a translation.

Gullborg's patent No. 1,307,733 was issued on the same day as his patent No. 1,307,734. The two patents resulted from copending applications. What Gullborg disclosed in his first application of February 11, 1918, is not, of course, available to show that Gullborg was not the original and first inventor of anything shown in his second patent application of December 21, 1918, and is not, therefore, a part of the "prior art" which can be used to invalidate or limit Gullborg's patent No. 1,307,734. It was in recognition, doubtless, of the complete ineffectuality of Gullborg patent No. 1,307,733 and of the French patent to Seng to support the argument of counsel for the petitioners that the claims of Gullborg patent No. 1,307,734 are invalid unless limited to all of the precise details of the drawings and specifications of that patent, that

counsel have attempted to adopt the expedient of referring to the decisions of various courts in various other cases where allusion is made to various other patents of the prior art. These other prior art patents are not, however, available as any part of the record herein. Neither party had any opportunity to offer any evidence relative to them. These other patents were not before the District Court nor the Court of Appeals. This Court is asked, therefore, to consider them *de novo,* and then only upon the basis of what can be found in the opinions of other courts in other cases relative to them.

II.

A Detailed Showing of the De Novo Character of the Case Now Attempted To Be Presented in This Court Upon Questions Formally Abandoned or Not Pleaded or Not Raised or Discussed or Decided in the Lower Courts, or Not in Any Event Available in Defense To a Claim of Patent Infringement.

1. The Petitioners' Complete Abandonment in This Court of the Only Defense Which Was in Issue in the District Court.

The sole question which was in issue upon the trial in the District Court was decided by his Honor Judge Schoonmaker in the following language quoted from his opinion:

> "We find that the defendants are contributory infringers of the claims of the patent in suit through their sale of fitting or coupling elements of the combination covered by the patent, **with the purpose of bringing about its use in the patented combination.** The evidence on this point is quite

satisfying. The law is plain that the sale of an element of a combination for the purpose of bringing about its use in such a combination, constitutes the seller a contributory infringer: *Thompson-Houston* v. *Ohio Brass Co.*, 80 Fed. 712. It is equally well settled that it is a contributory infringement to sell parts of a complete combination for use in conjunction with other parts of that combination which had been furnished by the patentee: *Leeds & Catlin* v. *Victor*, 213 U. S. 301, and 213 U. S. 325.

"The precise type of contributory infringement charged in the instant case was before the Circuit Court of Appeals of the Second Circuit in *Bassick Mfg. Co.* v. *Adams Grease Gun Corporation*, 52 Fed. (2d) 36; and that Court upheld the infringement charge.

"We rest our conclusion in the instant case on the opinion of the Circuit Court of Appeals in that case." (R., pp. 127-8.)

The record (pp. 14 to 125) contains the testimony offered in the District Court. The foregoing opinion of Judge Schoonmaker decided the one issue raised by this testimony. The petitioners' complete abandonment of the one issue which was raised upon the trial is strongly indicated by the fact that throughout the entire brief in this Court on behalf of the petitioners, there is only one citation or reference to this record of the testimony in the District Court. That one reference appears on page 14 of the petitioners' brief. It is as follows:

> "At the time of trial, more than 544,000,000 of the patented pin-fittings had been sold by plaintiff (R., p. 18)."

Throughout the brief of counsel for the petitioners there are, indeed, only four other references to any part of the record:

On page 8, counsel for the petitioners refers to Gullborg's patent No. 1,307,733 printed at "(R., pp. 212-214)".

On page 21 of his brief counsel again refers to this Gullborg patent No. 1,307,733 "(R., pp. 212-14)".

On page 21 of his brief counsel refers again to this Gullborg patent No. 1,307,733 "(R., pp. 212-14)".

On page 21 he refers to "the French Seng patent No. 468,869 (R., pp. 272-5)".

Except for such facts as may be presented by Gullborg patent No. 1,307,733 and the French patent to Seng (which has never been regarded as of sufficient consequence to warrant even the offer or presentation of a translation), and by the one sentence in which it is said that the respondent had at the time of the trial sold more than 544,000,000 of its pin fittings, the factual matter upon which counsel carries his arguments is contributed wholly by himself.

At the risk of being somewhat tedious, but in an effort to show that the testimony in the District Court was limited to the one question of the intent with which the defendants sold their parts of the complete combinations of the Gullborg patent, we have thought it best at this point to incorporate a brief but complete résumé of all of the testimony adduced on both sides in the District Court.

A Brief Résumé of All of the Testimony Taken at the Trial.

Plaintiff's Testimony.

Plaintiff proved incorporation of plaintiff and change of name from Bassick Manufacturing Company to Alemite Manufacturing Company and to Alemite Corporation.

Title to patent in suit was admitted (R., p. 15).

DON ALEXANDER.
(R., p. 15.)

Identified samples of plaintiff's products manufactured and sold under patent in suit.

Identified samples of oil and grease cups used prior to advent of the Alemite system.

Alemite equipment was adopted by car manufacturers despite the fact it cost more than old-fashioned grease cups and oil cups.

Identified enlarged samples of Alemite pin fittings and couplers.

Gave figures showing sales of 544,000,000 Alemite pin fittings and 17,000,000 Alemite compressors with couplers, and gave amount of yearly sales in dollars amounting to a total of $44,632,159.02.

Explained plaintiff's methods of distributing its products.

Identified advertising literature bearing name of Rex Duplex Fitting Company (the defendants).

ROBERT H. KIDD.
(R., p. 24.)

Was formerly a defendant in this case and consented to the entry of a decree for a permanent injunction.

Was a salesman for Rogers and Dusenberry from January, 1932, to August, 1932.

Identified Plaintiff's Exhibit 16 as a compressor and coupler outfit of the kind he sold for Rogers and Dusenberry.

Identified Plaintiff's Exhibit 17 as the type of fitting Kidd sold for Rogers and Dusenberry.

> "I was instructed by Mr. Rogers, G. S. Rogers and Mr. Dusenberry to sell (compressors and couplers like Plaintiff's Exhibit 16) to garages, service stations and manufacturers of different kinds of

machinery where they used lubricating equipment for use on—they could be used with any standard make compressor and hose and coupler, or the Rex compressor, hose and coupler. . . . I could sell the compressor outfit separate or I could sell the fittings separate, either way. It didn't matter which way. I was told that the Rex compressor and coupler outfits could be used with the Alemite equipment or the Rex equipment, either way. I was instructed that the Rex fittings like Plaintiff's Exhibit 17 could be used for the Alemite compressor outfit or the Rex, either one."

These instructions were given by Dusenberry and Rogers.

Sold fittings alone to various named concerns and a few Rex compressor and coupler outfits to Wade's.

Kidd was not restricted in any way in his authority to sell Rex compressor and coupler outfits. Sometimes sold fittings alone, sometimes sold compressors and couplers alone. When he sold fittings alone he understood that the fittings were to be used in conjunction with Alemite compressor and coupler outfits like Plaintiff's Exhibit 5, and when he sold Rex compressor and coupler outfits like Plaintiff's Exhibit 16, he understood they were to be used in conjunction with Alemite fittings like Plaintiff's Exhibit 4.

Identified letters and advertising circulars sent out by Rogers and Dusenberry referring to Rex equipment like Plaintiff's Exhibits 16 and 17.

Marvin Walkow.
(R., p. 35.)

Employed by Wade's, Inc., a Pittsburgh lubrication service company which owned and used Alemite compressor outfits like Plaintiff's Exhibits 5 and 6, and a large Alemite electric compressor, each equipped with an Alemite coupler.

Walkow, for his company, purchased fifty 1/8" straight fittings like that of Plaintiff's Exhibit 20, and received as representing the transaction a receipt, Plaintiff's Exhibit 21 (R., p. 146) bearing date of May 16, 1932.

Defendants' fittings were placed in stock and were used by Wade's Service Station to replace fittings on automobiles. Lubricant was introduced to bearings equipped with defendants' fittings with the Alemite compressor outfits (R., p. 35).

EDWIN J. BALLUFF.
(R., p. 37.)

Made purchase of fifteen of defendants' fittings identified as Plaintiff's Exhibit 22 (R., p. 37) on September 17, 1932, from defendants' sales representative, Chicago Automotive Surplus Company, in Chicago. The sales slip is in evidence as Plaintiff's Exhibit 24 (R., p. 147).

Told defendants' sales representative at time of purchase that fittings were for use in conjunction with a lubricant compressor and coupler outfit which Balluff exhibited and which is in evidence as Plaintiff's Exhibit 23 (R., p. 37).

Device of Plaintiff's Exhibit 23 is illustrated in a drawing Plaintiff's Exhibit 34, duplicated at page 154 of the record. Plaintiff's Exhibit 23 is a Lyman compressor and coupler outfit of the kind enjoined pursuant to the opinion of the 6th C. C. A. (18 Fed. (2d) 29). (R., p. 51.)

NELSON CORNELL.
(R., p. 39.)

On September 16, 1932, Cornell purchased from defendants' sales representative in Chicago, Chicago Automotive Surplus Company, fifty of defendants' fittings, identified as Plaintiff's Exhibit 25 (R., p. 39), and received as representing the transaction a receipt, Plaintiff's Exhibit 26 (R., p. 148).

M. K. ULRICH.
(R., p. 42.)

On July 11, 1932, Mr. Ulrich purchased from defendants' sales representative, Robert H. Kidd, at Pittsburgh, one hundred of defendants' fittings, identified as Plaintiff's Exhibit 27 (R., p. 42), receiving as representing the transaction a receipt, Plaintiff's Exhibit 28 (R., p. 149).

Also identified Plaintiff's Exhibit 29 (R., p. 150), an advertisement of defendants' equipment published by Robert H. Kidd as sole agent.

THOMAS H. BRYSON.
(R., p. 44.)

Was an employe of Equitable Auto Company, the transportation unit of the Philadelphia Company, the large public service company operating the street railway and bus service. Equitable Auto Company serviced the numerous street-cars and automobiles with Alemite compressor outfits, both hand and motor operated equipments, all provided with Alemite couplers (R., p. 45).

Equitable Auto Company purchased one hundred of defendants' fittings like Plaintiff's Exhibit 17, on May 17, 1932 (R., p. 45).

Defendants' bill of sale, Plaintiff's Exhibit 31, appears at Record, p. 153, and the Equitable Auto Company's check in payment for the fittings, Plaintiff's Exhibit 30, appears at Record, p. 151.

Equitable Auto Company did not own any defendants' compressor and coupler outfits, and the defendants' fittings purchased by the Equitable Company were placed in stock with Alemite fittings already on hand and the defendants' fittings were used interchangeably with Alemite fittings (R., p. 47).

ELWOOD HANSMANN.
(R., p. 50.)

Familiar with litigation under the patent in suit. he identified Plaintiff's Exhibit 23, exhibited to defendants' Chicago sales representative by Balluff when Balluff made a purchase of fifteen fittings for use in conjunction therewith, as being a Lyman compressor and coupler outfit enjoined pursuant to the opinion of the 6th C. C. A. (18 Fed. (2d) 29).

Identified Plaintiff's Exhibit 34 (R., p. 154) as a drawing of the Lyman equipment which had been enjoined, and as a drawing of the compressor and coupler outfit exhibited by Balluff to defendants' sales representative in Chicago at the time Balluff purchased defendants' fittings (R., p. 52).

Identified cut-open specimen of defendants' fitting as Plaintiff's Exhibit 35 (R., p. 53).

Identified Plaintiff's Exhibit 36 as a drawing of defendants' compressor and coupler outfit like Plaintiff's Exhibit 16 (R., p. 53). The defendants' compressor and coupler outfit in this drawing is shown in conjunction with an Alemite pin fitting.

Defendants' Testimony.

Patrick C. Gasparin.
(R., p. 55.)

Employed by defendants as a machinist.

Identified an enlarged specimen of defendants' coupler and fitting offered in evidence as Defendants' Exhibit A.

Identified a drawing of defendants' coupler and fitting as Defendants' Exhibit B (R., p. 270).

R. W. Dusenberry.
(R., p. 60.)

Mr. Dusenberry, one of the defendants, undertook to testify relative to the defendants' custom in selling their equipment. His attempts to say that defendants' compressor and coupler outfits were sold only for use with defendants' fittings, and that defendants' fittings were sold only for use with defendants' compressor and coupler outfits, were pathetic (R., pp. 60 *et seq.*).

Testified that he was the proprietor of Rex Duplex Fitting Sales Company, a selling organization.

He purchased from G. S. Rogers, co-defendant, proprietor of Rex Duplex Fitting Company, having a factory at Oakmont, Pennsylvania (R., p. 63).

Admitted the sale of fittings alone to Equitable Auto Company, Wade's Service Station, Ulrich, City of Pittsburgh, and others (R., pp. 67, 68).

Identified specimens of defendants' sales literature (R., pp. 139, 140-A, 140-B, 267, 268).

J. Roy Van Kirk.
(R., p. 90.)

One of counsel for defendants.

He testified that he instructed defendants' salesmen that in the opinion of counsel the sale of defendants' compressor and coupler and fittings, when sold together, would not constitute an infringement of the Gullborg patent in suit (R., p. 91), but that the parts of the equipment might be sold separately (R., p. 92).

On cross-examination he said he did not know what the claims of the Gullborg patent were (R., p. 93).

C. L. W. Trinks.
(R., p. 96.)

Defendants' expert.

Re-identified drawing of defendants' coupler and fitting, Defendants' Exhibit B, reproduced at Record, p. 270 (R., p. 104), and described the construction.

Discussed the advantages of the Gullborg patent construction (R., p. 111), and compared the defendants' coupler and fitting with the Gullborg construction.

During Mr. Trinks' testimony, defendants' counsel offered in evidence as Exhibit D, Seng French patent No. 468,869 (R., pp. 272-275), the only patent offered in evidence in behalf of the defendants.

Don Alexander.
(R., p. 121.)

Plaintiff's witness in rebuttal.

Identified a specimen of the Alemite Zerk or push type equipment made and sold by plaintiff, fittings as Plaintiff's Exhibit 43 and compressor as Plaintiff's Exhibit 46. These exhibits were offered to identify what Mr. Dusenberry had referred to in his testimony in behalf of the defendants.

ELWOOD HANSMANN.
(R., p. 121.)

Mr. Hansmann, in rebuttal, familiar with plaintiff's patent litigation, testified that the Seng French patent No. 468,869 (R., p. 272), offered in behalf of defendants as Exhibit D, was before the courts in *Lyman et al.* v. *Bassick*, 18 Fed. (2d) 29; *Bassick* v. *United Grease Gun Corporation*, 40 Fed. (2d) 549; *Bassick* v. *Ready Auto Supply Company*, 22 Fed. (2d) 331; and *Bassick* v. *Adams Grease Gun Corporation*, 52 Fed. (2d) 36.

THIS RESUME OF THE TESTIMONY REVEALS THAT NONE OF THE ISSUES NOW ASSERTED IN THIS COURT WAS PRESENTED TO THE TRIAL COURT.

It is obvious from this testimony:

(*a*) That the validity of the Gullborg patent No. 1,307,734, was not in issue;

(*b*) That an implied license to the defendants was not in issue;

(*c*) That the plaintiff's alleged violation of the Clayton Act was not in issue; and

(*d*) That the only ground of the defendants' contention of non-infringement was that they did not sell their parts of the complete combinations with the expectation and intention that the purchasers would combine them with the other parts sold either by the plaintiff or by infringers (*e. g.*, Lyman Manufacturing Company) of the plaintiff's patent.

2. In the District Court and in the Court of Appeals, the Petitioners Expressly Admitted the Validity of the Claims of the Gullborg Patent in Suit; This Court Is Asked De Novo to Find That This Gullborg Patent Is Not Valid.

On page 15 of his brief counsel for the defendant-petitioners admits that the validity of the patent in suit was conceded in the lower courts in this cause,—and then blandly attempts to retract that concession. Counsel for petitioners says:

> "the validity of the patent in suit was conceded in the lower Courts in this cause. (Defendant-petitioner no longer concedes the validity of the patent in suit, but on the contrary also denies validity.)"

The validity of the Gullborg patent in suit was expressly conceded by the defendant-petitioners at the outset of the trial. The record does not include the opening statement of counsel for either party, but during the course of the testimony the Court asked counsel for the defendant-petitioners:

> "The Court: What is your position, Mr. Clarke, with reference to the patents in suit? Do you concede that the claims in suit are valid?
>
> "Mr Clarke (counsel for defendants): We are not contesting the validity, your Honor, **as I said at the outset.**
>
> "The Court: That is what I understood—that you were not contesting the validity.
>
> "Mr. Clarke: No, sir. Our defense is non-infringement." (R., p. 98.) (Emphasis ours.)

The District Judge, in his opinion, said:

> "The Gullborg patent covers a lubricating system of equipment, which has come to be practically

of universal use in the lubricating of automobiles.

"No question of its validity was involved in this suit. The patent has been held valid by many courts, and its validity was conceded at the trial." (R., p. 127.)

One of the District Court's findings of fact was that

"2) The said letters patent are good and valid in law." (R., p. 126.)

The decree of the District Court adjudged

"(2) That the said Letters Patent are good and valid in law." (R., p. 129.)

The defendant-petitioners' assignments of error to the Court of Appeals appear on pages 131-132 of the Record. Not one of the defendant-petitioners' assignments raised any question as to the holding of the decree or the finding of fact that the claims in suit of the Gullborg patent were valid.

Although the record in this Court does not contain the defendant-petitioners' brief nor petition for rehearing in the Circuit Court of Appeals, the opinion of that Court (R., p. 136) says that "The questions involved in the present case were discussed by the court below in its opinion" (R., p. 137), thus confirming our statement that the defendant-petitioners conceded the validity of the Gullborg patent in suit just as they had done in the District Court.

Despite the defendants' concession at the outset of the trial in the District Court that the claims in suit of the Gullborg patent were valid, and despite the fact that this concession was adhered to throughout the trial and the arguments in the District Court and in the Circuit Court of Appeals, still counsel for the defendant-petitioners asserts in this Court that "Defendant-petitioner no longer concedes the validity of

the patent in suit, but on the contrary also denies validity." (Petitioners' Brief, p. 15.)

Counsel then proceeds to urge the invalidity of the Gullborg patent on various scores.

Under Point I of his argument counsel for the petitioners says, on page 29 of his brief:

> "the claims are obviously invalid, as failing particularly to point out and distinctly to claim the alleged invention, as required by Section 4888 of the Revised Statutes."

Petitioners' Point III of their argument is likewise that "The claims in suit are fundamentally invalid." (Petitioners' Brief, p. 39.)

Under Point VI of his argument counsel for the defendant-petitioners says, on page 48 of his brief, "The case at bar is not one which would justify any indulgence in favor of the validity of the claims," and then asserts these claims to be "fundamentally invalid and violative of the essential principles of patent law" (Petitioners' Brief, p. 49), for any one or all of several asserted reasons.

Under Point VII of the argument on behalf of petitioners, counsel discusses "The practical effect of sustaining plaintiff-respondent's contention as to the validity and scope of the claims in suit" (Petitioners' Brief, p. 50), depicting various imaginative calamities which will ensue.

Finally, in the first and last paragraphs of his "Conclusion," counsel for the petitioners urges upon this Court that "the claims in suit must be held invalid as not defining or as not limited to plaintiff's alleged contributions" (Petitioners' Brief, p. 53), and that this Court "strike at the root of the evil by holding the claims invalid" (Petitioners' Brief, p. 55).

THIS COURT WILL NOT PASS UPON AN AFTERTHOUGHT ISSUE NOT RAISED OR CONSIDERED IN THE LOWER COURTS AND URGED IN THIS COURT FOR THE FIRST TIME.

Minnich v. *Gardner,* 292 U. S. 48, 53, 78 L. Ed. 1116, 1119. (April 2, 1934—Opinion by Mr. Justice Sutherland.)

David Burnet v. *Commonwealth Improvement Co.,* 287 U. S. 415, 417, 77 L. Ed. 399, 402. (Dec. 12, 1932—Opinion by Mr. Justice McReynolds.)

United States v. *LaFranca,* 282 U. S. 568, 75 L. Ed. 551, 557. (February 24, 1931—Opinion by Mr. Justice Sutherland.)

Hathaway & Co. v. *United States,* 249 U. S. 460, 464, 63 L. Ed. 707, 709. (April 14, 1919—Opinion by Mr. Justice Brandeis.)

Virtue v. *Creamery Package Mfg. Co.,* 227 U. S. 8, 38, 57 L. Ed. 393, 407. (January 20, 1913—Opinion by Mr. Justice McKenna.)

Green County v. *Thomas' Executor,* 211 U. S. 598, 53 L. Ed. 343, 345. (January 4, 1909—Opinion by Mr. Justice Moody.)

Great Northern Railway Co. v. *United States,* 208 U. S. 452, 52 L. Ed. 567, 577. (February 24, 1908—Opinion by Mr. Justice White.)

United States v. *American Tobacco Co.,* 166 U. S. 468, 479, 41 L. Ed. 1081, 1085. (April 12, 1897—Opinion by Mr. Justice Peckham.)

Badger v. *Ranlett,* 106 U. S. 255, 258, 27 L. Ed. 194, 196. (December 11, 1882—Opinion by Mr. Justice Blatchford.)

George M. Wheeler v. *John Sedgwick,* 94 U. S. 1, 24 L. Ed. 31, 32. (Decided Nov. 20, 1876—Waite, C. J.)

Supervisors v. *Lackawanna Iron and Coal Co.,* 93 U. S. 619, 23 L. Ed. 989, 991. (January 22, 1877—Opinion by Mr. Justice Davis.)

Albert Klein v. *Nathan C. Russell,* 86 U. S. 433 463, 22 L. Ed. 116, 124. Mar. 3, 1874—Opinion by Mr. Justice Swayne.)

Houghton et al. v. *Jones,* 68 U. S. 702, 705, 17 L. Ed. 503, 504. (Decided Dec. 28, 1863—Opinion by Mr. Justice Field.)

Insurance Co. of Valley of Virginia v. *Mordecai,* 63 U. S. 111, 16 L. Ed. 329, 332. (Opinion by Mr. Justice Nelson.)

United States v. *Thomas O. Larkin et al.,* 59 U. S. 557, 561, 15 L. Ed. 485, 487. (Decided May 12, 1856.)

James C. Bell et al. v. *Matthias Bruen,* 42 U. S. 169, 187; 11 L. Ed. 89, 96. (Opinion by Mr. Justice Catron.)

The petition for a writ of certiorari was not based upon the lower courts' acceptance of the petitioners' concession of validity. It was not based upon any alleged conflict of decision between any two circuit courts of appeals relative to the validity of the claims of the Gullborg patent. The petitioners' contention of invalidity is therefore quite outside the scope of the petition for a writ of certiorari. There was, indeed, no conflict of opinion relative to this matter of validity upon which a petition for a writ of certiorari could have been based.

THIS COURT WILL NOT CONSIDER A QUESTION NOT RAISED IN AND BY THE PETITION FOR WRIT OF CERTIORARI.

"Since both courts in the Sanitary case held the five specific claims to be valid, and neither court in the Dent case held them to be invalid, and the Hardware Company, in defending for the Refrigerator Company in the Sanitary case and for itself in the Dent case, admitted in both circuit courts of appeals that these claims were valid if limited to the specific structure disclosed, we have no occasion here to determine the question as to the validity of these claims when thus limited; especially as the petition for certiorari in the Sanitary case did not question the decree of the circuit court of appeals for the seventh circuit in respect to the validity of these claims, but assigned as error merely its holding in reference to the question of infringement and was based solely on the conflict between the two circuits in respect to that question." —*Sanitary Refrigerator Co.* v. *Winters,* 280 U. S. 30, 34, 74 L. Ed. 147, 152. (October 14, 1929—Opinion by Mr. Justice Sanford.)

Benjamin F. Johnson v. *Manhattan Railway Co.,* 289 U. S. 479, 494, 77 L. Ed. 1331, 1343. (May 29, 1933—Opinion by Mr. Justice Van Devanter.)

Gunning v. *Cooley,* 281 U. S. 90, 98, 74 L. Ed. 720, 726. (March 12, 1930—Opinion by Mr. Justice Butler.)

Ben W. Steele v. *J. H. Drummond,* 275 U. S. 199, 203, 72 L. Ed. 238, 239. (Nov. 21, 1927—Opinion by Mr. Justice Butler.)

James C. Davis v. *J. M. Currie,* 266 U. S. 182, 183, 69 L. Ed. 234. (Nov. 17, 1924—Opinion by Mr. Justice McReynolds.)

Webster Electric Co. v. *Splitdorf Electrical Co.*, 264 U. S. 463, 464, 68 L. Ed. 792, 793. (April 7, 1924—Opinion by Mr. Justice Sutherland.)
Alice State Bank v. *Houston Pasture Company*, 247 U. S. 240, 62 L. Ed. 1096, 1098. (June 3, 1918—Opinion by Mr. Justice Holmes.)

3. THE PETITIONERS CONTEND IN THIS COURT FOR THE FIRST TIME THAT THEY WERE IMPLIEDLY LICENSED BY THE PLAINTIFF-RESPONDENT. THIS DEFENSE OF "LICENSE" WAS NOT PLEADED. NEITHER PARTY OFFERED ANY EVIDENCE RELATIVE TO IT. NEITHER THE DISTRICT COURT NOR THE COURT OF APPEALS WAS ASKED TO CONSIDER IT.

Counsel for petitioners contends that if the claims of the patent in suit are not held invalid, then they should be held not infringed "by holding that the unconditional sale by plaintiff of its pin-fittings under its earlier patent No. 1,307,733 (not in suit) carries with it an implied license" to the (petitioners) "to connect with it" what is described as the petitioners' grease gun. (Petitioners' Brief, p. 54.) Again it is contended that if the patent be not held invalid, then it "must be held not infringed" on the ground "that plaintiff's unconditional sale of its suction-effect grease-guns sold by it under claims 1, 2, 3, 4 and 8 of the patent in suit, carries with it the implied license to use them on" what counsel chooses to call "any old and unimproved and unpatentable bayonet-type grease-cups of competitors," *i. e.*, the petitioners. (Petitioners' Brief, p. 54.)

The above-quoted passages are taken from the "Conclusion" of counsel's brief. This same defense

of "an implied license" is urged also in the body of the brief, *e. g.*, on pages 19, 29, 36, 37, 47 and 54.

The petitioners' plea of an implied license is presented in this Court for the first time. No such defense was considered by the District Court (R., p. 127) nor by the Court of Appeals (R., p. 136). No such defense was made the subject of any assignment of error to the Court of Appeals (R., p. 131).

Indeed, the defendants' answer (R., p. 7) can be searched in vain for any suggestion or plea of any kind of a license or any kind of an estoppel which would prevent the plaintiff from asserting the monopoly accorded by its patent.

Under the issues as raised by the pleadings, the petitioners could not have urged the defense of an implied license or an estoppel in the lower courts.

That the defense of license is one which must be specially pleaded and cannot be asserted under any general denial, is obvious under the most general rules of pleading. The text writers treat the rule in this regard as elementary. Thus, Walker on Patents, Sixth Edition, at page 738, says:

> "The 23rd defense, that the defendant has a license, must be set up in the answer, and the burden of proving such defense is upon the defendant."

The rule as stated by Walker is well established in the Federal Courts. In the early case of *Puetz* v. *Bransford*, 31 Fed. 458, Judge Thayer, on circuit in Missouri, said at page 464:

> "In deciding the case, the court is, of course, confined to those issues which have been raised by the pleadings. It may be that the firm of Bransford & Puetz became equitably entitled to patent No. 50, as part of the firm assets, by virtue of the

> partnership agreement, or that a license to the defendant to use the device covered by the third claim of said patent might be inferred from the manner in which the partnership business was conducted for a period of several months. But defendant has not pleaded property in the invention acquired in virtue of the partnership agreement, or a license to use the invention, or any facts which estop the complainant from asserting an exclusive right to make and sell the device covered by the third claim of the patent in question. The court is accordingly precluded from passing judgment on such defenses, although such defenses have been in effect made in the course of the argument."

The Federal equity rules coming into force subsequent to that decision did not change the necessity for affirmatively pleading such a defense, although they did alter the form in which such a defense was to be presented. Equity Rule 29, referring to such defenses, says:

> "Every defense heretofore presentable by plea in bar or abatement shall be made in the answer and may be separately heard and disposed of before the trial of the principal case in the discretion of the court."

That a plea of license was presentable by a plea in bar under the old rules of practice, there can be no doubt, for if a license were asserted by the defendant and proved, there would be no necessity for a trial on any other merits or any investigation of questions of validity and infringement of the patents in suit. This has been well recognized in the Federal Courts. In the comparatively recent case of *General Talking Pictures Corp.* v. *Stanley Co.,* decided in 1930, the opinion appearing in 38 Fed. (2d) 355, Judge Morris said:

> "The license agreement relied upon is general

in its terms, and includes 'any and all inventions relating to apparatus, methods or systems adapted for use in wire or radio signaling or communication, or relating to the audion or other vacuum, rarified gas or vapor electric discharge device, or relating in any wise to electrical translating devices (such, for example, as ocillation generators, relays, repeaters, amplifiers, detectors, rectifiers, power limiting devices, X-ray apparatus, etc.), which may be made or conceived by Lee De Forest during the period of seven years from and after the date hereof.'

"The substantive issue at the hearing upon this defense, which, notwithstanding it is directed to two only of the four patents in suit, would have been presentable by a plea in bar under the former rules, Story's Eq. Pl. secs. 647, 693, would be whether the inventions of the two patents under which a license is claimed are within the scope of this agreement.

"As the true end of a plea under the former rules, which required that it reduce the cause or the part to which it applied to a single point, was to save to the parties the expense of an examination of the witnesses at large, Story's Eq. Pl. sec. 652, so the true purpose of the provision in Rule 29 (28 USCA, sec. 723) for separate trial, in the discretion of the court, of a defense formerly presentable by plea, is likewise to save to the parties the expense of preparation and trial at large. Consequently, the question presented by the pending motion is whether a separate trial of the defense of license would probably inure substantially to the benefit of the parties."

Neither under the present equity rules nor under the rules of pleading as they existed prior thereto, can a defense of license be asserted or considered by the Court unless such a defense is affirmatively pleaded and set forth in the answer.

THE SUPREME COURT WILL NOT CONSIDER A DEFENSE WHICH HAS NOT BEEN PLEADED.

George F. Potter et al. v. *United States,* 107 U. S. 126, 131, 27 L. Ed. 330, 332. (January 15, 1883—Opinion by Mr. Justice Woods.)

Bates v. *Coe,* 98 U. S. 31, 47, 25 L. Ed. 68, 74. (November 25, 1878—Opinion by Mr. Justice Clifford.)

4. THIS COURT WILL NOT CONSIDER THE PETITIONERS' CONTENTION THAT THE PLAINTIFF'S USE OF ITS PATENT "IS VIOLATIVE OF THE SPIRIT AND LETTER OF THE ANTI-TRUST LAWS AND PARTICULARLY SECTION 3 OF THE CLAYTON ACT, 38 STAT. L. 731," BECAUSE (1) THIS DEFENSE WAS NOT PLEADED, (2) NEITHER PARTY OFFERED NOR HAD AN OPPORTUNITY TO OFFER ANY EVIDENCE RELATIVE TO IT, AND (3) ALLEGED VIOLATIONS OF THE ANTI-TRUST LAWS MAY NOT BE URGED AS A DEFENSE TO A CLAIM OF PATENT INFRINGEMENT.

The Clayton Act specifies the procedures which may be employed in its enforcement, and provides certain specified remedies which private parties may invoke in connection therewith. Its penalties and provisions cannot otherwise be invoked. The defendant's answer in this case (R., pp. 7-14) is devoid of any suggestion of any violation of any provision of the Clayton Act. Neither party offered any evidence in support of the petitioners' present contention in this Court nor in rebuttal thereof. Neither the decree nor the findings of fact nor the conclusions of law of the District Court referred in any way to the Clayton Act, nor to any

alleged violation or attempted violation of it. Furthermore, it is the well-settled rule of the Federal Courts throughout the country that alleged violations of the Clayton Act or other "Anti-Trust" laws cannot be pleaded in defense to suits for patent infringement.

"The action is clearly for infringement of patent rights, and many decisions cited in plaintiffs' brief are unanimous in holding that violations of the anti-trust laws in a patent suit for infringement are not a proper defense." —*Western Electric Co., Inc., et al.* v. *Wallerstein*, 48 Fed. (2d) 268. (D. C. W. D. N. Y.—1930. Opinion by Hazel, D. J.)

"It is well settled by a long line of decisions that it is no defense to a bill for alleged infringement of a patent that plaintiffs have entered into a combination or conspiracy among ourselves or with third parties to violate the anti-trust laws of the United States." (Citing many cases.) —*Radio Corporation of America et al.* v. *Majestic Distributors, Inc.*, 53 Fed. (2d) 641, 642. (D. C. D. Conn. Oct. 1, 1931—Thomas, D. J.)

"in a suit brought for the infringement of a patent by the owner, any such inquiry, at the behest of the infringer, would be as impertinent as one in respect to the moral character or antecedents of the plaintiff in an ordinary suit for trespass upon his property." —*Strait et al.* v. *National Harrow Co.*, 51 Fed. 819, 820. (C. C. N. D. N. Y., 1892—Opinion by Wallace, C. J.)

"The present complainants are entitled by the patent laws to a monopoly, for the term of the patent, of the manufacture and sale of the lamps made under it. The right to this monopoly is the very foundation of the patent system. They do not lose that right merely because they may have joined in a combination with others, holding other patents securing similar monopolies, which com-

bination may, when judicially examined in a proper forum, be held to be unlawful." —*Edison Electric Light Co. et al.* v. *Sawyer-Man Electric Co.*, 53 Fed. 592 (C. C. A. 2, 1892—Opinion Per Curiam.)

"The question of law which stares us in the face is this: Does an allegation that the complainant is a party to an unlawful conspiracy, which tends to restrain trade and oppress the defendant in its business, afford any defense to a suit for the infringement of letters patent, the title to which is vested in the complainant?

"This question has been answered in the negative by the courts with such unanimity and decisiveness that it would be wasted energy for me to do more than cite *National Folding Box & Paper Co.* v. *Robertson* (C. C.), 99 Fed. 985. . . .

"To leave the paragraph in, because it sets up an alleged substantive defense, which has been, time and again, decided by the courts to be a futile defense, would be, to my mind, an idle thing and a travesty. . . .

"The motion to strike out (paragraph of answer) is granted." —*Johns-Pratt Co.* v. *Sachs Co. et al.*, 176 Fed. 738, 739. (C. C. D. Conn. 1910—Opinion by Platt, D. J.)

See also:

Radio Corporation v. *Duovac Radio Tube Corporation*, 6 Fed. Supp. 275. (D. C. E. D. N. Y., June 17, 1931—Campbell, D. J.)

Dr. Miles Medical Co. v. *Platt, etc.*, 142 Fed. 606, 610. (C. C. N. D. Ill. 1906, Kohlsaat, C. J.)

Fraser v. *Duffey et al.*, 196 Fed. 900, 903. (D. C. D. Mass., 1912—Opinion by Colt, C. J.) Citing many cases.

Brown Saddle Co. v. *Troxel*, 98 Fed. 620, 621. (C. C. N. D. Ohio, E. D., 1899—Taft, C. J.)

United States Fire Escape Counterbalance Co. v. *Joseph Halsted Co.*, 195 Fed. 295. (D. C. N. D. Ill., E. D., 1912—Opinion by Sanborn, D. J.)

Motion Picture Patents Co. v. *Ullman, et al.*, 186 Fed. 174, 175. (C. C. S. D. N. Y., 1910—Holt, D. J.)

Independent Baking Powder Co. v. *Boorman*, 130 Fed. 726, 727. (C. C. D. N. J., 1904—Gray, C. J.)

Motion Picture Patents Co. v. *Eclair Film Co.*, 208 Fed. 416. (D. C. D. N. J., 1913—Opinion by Rellstab, D. J.)

5. The Grounds Upon Which the Petitioners Now Urge "Non-Infringement" in This Court Are Entirely Different From Those Upon Which They Urged "Non-Infringement" in the Lower Courts.

As we have seen, the petitioners' contention in the lower courts was that they did not sell their parts of the complete lubricating system with the expectation and intention that the purchasers would combine them in use with the other parts described in the claims of the Gullborg patent in suit. The lower courts decided that contention against the petitioners.

Their present contentions of "non-infringement" are upon entirely different grounds; namely, that the claims of the Gullborg patent are invalid; that they can be made valid only by importing into them a number of additional elements and details; and that when they are thus judicially rewritten in narrow form, the combinations of those parts sold by the petitioners with those parts sold by the plaintiff do not embody the claims as proposedly rewritten.

III.

There Is No Merit in Any of the Petitioners' New Theories of Non-Infringement; Which Theories Are Presented to This Court for the First Time During the Course of This Suit.

The theories of "non-infringement" now advanced by the petitioners in this Court were never advanced in the District Court nor in the Court of Appeals. They are newly concocted theories. This Court is invited to pass upon them for the first time.

Before taking up the petitioners' newly concocted theories of alleged "non-infringement," we should like to present as clearly as possible the factual situation relative to the claims in suit of Gullborg patent No. 1,307,734, and relative to the bearing of the claims upon the combinations resulting from the use of the petitioners' fittings and compressors in conjunction with the plaintiff's compressors and fittings.

The Invention and Claims of the Gullborg Patent in Suit.

The plaintiff offered in evidence as Plaintiff's Exhibit 39 (R., pp. 162 to 216) a certified copy of the file-wrapper and contents of Gullborg patent No. 1,307,733. The application for this patent was filed on February 11, 1918. Figure 2 of the drawing of this Gullborg patent No. 1,307,733 (R., p. 216) discloses a pin fitting comprising a tubular member flanged inwardly at one end to provide a closure seat, a closure or ball, a pin extending transversely through the tubular member, and a spring confined between the ball and pin. The fitting in this Gullborg patent No. 1,307,733 is shown

in conjunction and combination with a grease compressor comprising a grease gun terminating in a coupler, which in turn comprises a hollow shell with bayonet slots adapted to coact with the ends of the cross-pin of the fitting in such a way as to draw the head of the fitting tightly into engagement with the gasket 37 which is located at the bottom of the bore of the coupler shell.

Some months after this first Gullborg application was filed in the Patent Office on February 11, 1918, Gullborg devised an improved lubricating system in which the coupler had a spring-pressed sliding gasket or sealing member which would produce a suction effect which was useful in removing the excess lubricant from the head of the fitting. He therefore filed a second patent application on December 21, 1918, disclosing the complete combination of compressor and pin fitting, but now substituting the suction effect coupler for the non-suction effect coupler of the first application of February 11, 1918.

The two applications were copending in the Patent Office and were prosecuted together. What are now claims 14 and 15 of the Gullborg patent in suit No. 1,307,734, were initially claims 9 and 10 of the first application as originally filed. (See file-wrapper, R., pp. 172-173, Plaintiff's Exhibit 39.) The numbering of these claims 9 and 10 was changed to 5 and 6, and by amendment of March 20, 1919, these claims were renumbered 3 and 4 (R., pp. 180, 197). Throughout the prosecution of the patent application, these claims 9 and 10 as originally submitted to the Patent Office upon the filing of the application were never amended or modified in the slightest degree.

The plaintiff also offered in evidence the file-wrapper and contents of the Gullborg patent in suit No.

1,307,734 (Plaintiff's Exhibit 40). This history of the prosecution of the application for the patent in suit appears at pages 217 to 266, inclusive, of the record. The Commissioner of Patents formally "allowed" this second patent application on March 29, 1919 (R., p. 253).

Twenty-one days later, on April 19, 1919, Gullborg's first application was formally allowed (R., p. 210).

As matters then stood, two Gullborg applications had been allowed, both containing claims upon complete combinations of elements making up the compressor and fitting. The claims in the two applications differed in scope, but nevertheless both applications contained claims to a complete combination including the parts of the pin fitting, the grease pump and the coupler. In order to avoid any possible charge of double patenting (a defense which has been successfully made against the claims of two separate patents to the same inventor, differing only in scope), it was necessary to transfer claims 3 and 4 (original claims 9 and 10) of the earlier application to the later application before the patents issued.

Under the rules of the Patent Office it was not possible to transfer *all* of the claims of the later application to the earlier application, nor was it possible to transfer *all* of the claims from the earlier application to the later application.

It was not possible to transfer all of the claims from the later application to the earlier application, because the allowed claims in the later application included among their elements, "a perforated sealing disk slidably mounted in the enlarged portion of said bore, and a spring confined between the ends of said conduit and said disk for urging said disk against said first

named coupling member," etc., (*i. e.*, the improvements which gave rise to the "suction effect" cleansing of the fitting at the moment of disunion) and these things were not disclosed in the drawings or specifications of the earlier application as originally filed. Their inclusion in the combination had not, indeed, been invented until some time after the filing of the earlier application. It was not permissible to include in the earlier application, claims which were not "supported" by the accompanying specification and drawings as filed. It was not permissible to add to the drawings and specifications of the application filed on February 11, 1918, the things which Gullborg had not invented until a later date.

On the other hand, all of the claims of the earlier application could not be transferred to the later application for the reason that the Patent Office rules (based upon considerations of classification and indexing for searching purposes), did not permit claims drawn to two different "species" to be issued in any single patent. When both applications were allowed, the earlier application contained some claims to the pin fitting part of the combination (*e. g.*, claim 3 of patent No. 1,307,733). The other application contained one or more claims to another species, *i. e.*, the suction effect compressor (*e. g.*, claim 7 of patent No. 1,307,734).

It was, however, permissible, and it was desirable for the reasons previously stated, to put into one patent all of the claims which covered the complete combination of compressor and fitting, regardless how the various claims to this complete combination might differ in scope. Accordingly, therefore, on April 30, 1919, claims 3 and 4 (claims 9 and 10 as originally filed) were cancelled out of the earlier application (see

R., pp. 206-207). On the same date the same claims were incorporated by amendment in the later application as claims 14 and 15 (R., pp. 246 to 250).

After the transfer of the present claims 14 and 15 of patent No. 1,307,734 had been made from the earlier Gullborg application to the later Gullborg application, the final fees in both applications were paid and the two Gullborg patents issued on June 24, 1919, as Nos. 1,307,733 and 1,307,734.

Claims 14 and 15 of Gullborg patent No. 1,307,734, having been prosecuted and allowed in the application for patent No. 1,307,733, in precisely the form in which they were originally filed in that application on February 11, 1918, must be read and interpreted in consonance with the disclosure of the earlier application, *i. e.*, in consonance with the disclosure of the drawings and specifications of the application for Gullborg patent No. 1,307,733. The drawings and specifications of the earlier application in which these claims 14 and 15 were originally made, prosecuted, and finally allowed, did not disclose the slidably mounted sealing disk nor the associated spring which provide the "suction effect" of the combination subsequently invented by Mr. Gullborg and disclosed for the first time in his later application of December 21, 1918.

These claims 14 and 15 of the Gullborg patent in suit No. 1,307,734, having originally been filed in the earlier application of February 11, 1918, must necessarily apply to the things which were disclosed in the drawings and specifications of that earlier application. They could not, therefore, narrowly and specifically describe as elements of the combination, the sliding sealing disk and the confined spring which were not disclosed in the earlier application as filed, and which,

indeed, had not even entered Gullborg's mind until long after February 11, 1918, on which date that application was filed.

These claims 14 and 15 of the Gullborg patent in suit No. 1,307,734 were written in precisely their present form and filed in the Patent Office on February 11, 1918. They thus appear in the Gullborg patent application as filed on February 11, 1918, at pages 172-173 of the Record (claims 9 and 10 of the original application).*

Claims 14 and 15 of the Gullborg patent in suit are comparatively specific in their description of the pin fitting parts of the complete combination. They are relatively broad in their description of the coupler parts of the complete combination. They were necessarily broad in their description of the coupler parts of the combination because the suction effect details of the coupler, *i. e.*, the sliding sealing disk and its confined actuating spring had not even been conceived of at the time these claims were written.

Claims 1, 2, 3, 4 and 8 of the Gullborg patent in suit are, on the other hand, comparatively broad in their description of the pin fitting parts of the complete combination. They are relatively narrow in their description of the coupler parts of the complete combination because they include those elements which give rise to the suction effect, *e. g.*, the sliding sealing disk and the confined spring associated therewith,—things which were not disclosed in the earlier application of Feb-

* To say that these claims 14 and 15 as thus drawn and filed in the Patent Office on February 11, 1918, are to have the sliding sealing disk and the confined spring of the "suction effect" coupler imported into them by construction or interpretation, is tantamount to saying that these claims describe specifically and are limited to an invention which had not even been conceived of until months after the claims were drawn in precisely their present form and filed in the Patent Office on February 11, 1918.

ruary 11, 1918, and, indeed, things which had not even been conceived of at the time that earlier application was filed.

All of these claims are broad in their description of the grease pumping part of the complete combination.

The Sixth Circuit Court of Appeals (comprising a bench made up of Judges Denison, Donahue, Moorman and Tuttle) had all of these claims before it in a succession of six suits against Larkin Automotive Parts Company and O. K. Manufacturing Company and Peerless Automatic Machine Company and Lyman Manufacturing Company, and Riggs Tire & Supply Company and Wag's Auto Accessories Company, which were separately argued at various times over a period of a year. All of these cases were decided in the single opinion reported at 18 Fed. (2d) 29. All of these claims were sustained and found to be infringed by one or more of the defendants before the court in those cases. All of these same claims have been sustained and held infringed in numerous other cases in which the defendants' equipment was legally identical with that of the petitioners in the present suit.

Claim 12 of the Gullborg patent No. 1,307,734 was held invalid by the Sixth Circuit Court of Appeals in the opinion reported at 18 Fed. (2d) 29, at page 36. Accordingly, this claim was disclaimed by plaintiff (R., pp. 257-258, 264). Any intimation that the other claims of the Gullborg patent in suit are of the same tenor or scope as claim 12, must be based upon a very casual consideration of the claims of the Gullborg patent and the holding of the Sixth Circuit Court of Appeals, because in its opinion (18 Fed. (2d) at p. 36) the Court said:

> "In claim 12 there is no novelty over Winkley, excepting that the interposed gasket is held against

> one of the members by the pressure of the lubricant. This claim, for the reasons just stated, is invalid."

The preceding sentences of the Court of Appeals' opinion give those reasons, as follows:

> "So far, therefore, as any claim in Gullborg depends upon the suction result, it is valid; so far as it must rest *solely* for its novelty upon the pressure produced adhesion, it is invalid. Of the claims in suit, Nos. 1, 2, 3, 4, 7 and 8 by their reference to a perforated sliding disk or cup washer or means for removing excess lubricant, sufficiently imply dependence upon the construction which will give this novel suction effect."

The construction by which the suction and cleansing effect is obtained is recited in claims 1, 2, 3, 4 and 8. The Sixth Circuit Court of Appeals pointed out that the means for producing the suction effect, *i. e.,* the "perforated sliding disk or cup washer," was not included in claim 12. When, however, the Sixth Circuit Court of Appeals pointed out that claim 12 was directed *solely* to the construction by which the pressure-produced adhesion was obtained, it had in mind that this claim 12 did not contain certain other limitations recited in claims 14 and 15 which in and by the same opinion were expressly held to be valid. These other features which were included in claims 14 and 15, but which were not included in claim 12, were of course such things as "a tubular member having one end flanged inwardly to provide a closure seat, a closure, a pin extending through said tubular member and from both sides thereof, and a spring confined between said pin and said closure, and tending to hold said closure on its seat" (claim 14). None of these elements is recited either broadly or narrowly in claim 12.

There is obviously no reason why any of the elements

of claims 1, 2, 3, 4, and 8, or any of the elements of claims 14 and 15, should be deleted from those claims in order to make them more or less substantially identical with claim 12. To do so would be to rewrite them arbitrarily for the very purpose of holding them invalid upon the ground that they, like claim 12. are too broad.

On the other hand, there is no reason why claims 1, 2, 3, 4, and 8, should be rewritten by incorporating into them all of the additional elements recited in claims 14 and 15, and no reason for incorporating into claims 14 and 15 all of the additional elements recited in claims 1, 2, 3, 4, and 8. To do so would be simply to rewrite Gullborg's patent into the narrowest possible form for the arbitrary purpose of enabling the defendant-petitioners to say that they have not infringed.

THE INFRINGING MECHANISMS AND THE APPLICATION OF CLAIMS 1, 2, 3, 4, AND 8, AND THE APPLICATION OF CLAIMS 14 AND 15 THERETO.

The respondent charges the defendant-petitioners with contributory infringement of claims 1, 2, 3, 4 and 8 by their sale of fittings like Plaintiff's Exhibit 17,* adapted and intended and sold for use in conjunction with respondent's Alemite compressor and coupler outfits like those submitted as Plaintiff's Exhibits 5 and 6.*

Respondent charges defendant-petitioners with contributory infringement of claims 14 and 15 of the Gullborg patent by the petitioners' manufacture and sale of compressor and coupler outfits like Plaintiff's Exhibit 16,* adapted and intended and sold for use in conjunction with respondent's Alemite pin fittings of the type submitted as Plaintiff's Exhibit 4.*

* These several exhibits are before the Court as physical exhibits.

Gullborg Patent 1,307,734.

CLAIM 1.

The combination with a hollow coupling member having a pin projecting from one side thereof and a spring-pressed closure,

of a pump having a flexible conduit connected with the outlet thereof,

a second hollow coupling member secured to the other end of said conduit for receiving the closed end of said first named coupling member and provided with a bayonet slot for receiving said pin,

the transverse portion of said slot being inclined from the longitudinal portion thereof toward the outer end of the coupling member,

the bore of said coupling member being enlarged to provide a shoulder,

a perforated sealing disk slidably mounted in the enlarged portion of said bore,

and a spring confined between the ends of said conduit and said disk for urging said disk against said first named coupling member.

CLAIM 2.

The combination with a hollow coupling member having a pin projecting from one side thereof and a spring-pressed closure,

of a pump,

a discharge conduit having one end secured to the outlet of said pump,

a second hollow coupling member for receiving the closed end of said first named coupling member secured to the other end of said conduit and provided with a bayonet slot adapted to co-act with said pin,

a perforated sealing disk mounted to reciprocate in the bore of said coupling member,

means for yieldingly urging said sealing disk against the closed end of said first named coupling member,

and means for limiting the movement of said sealing disk in the direction of said second coupling member.

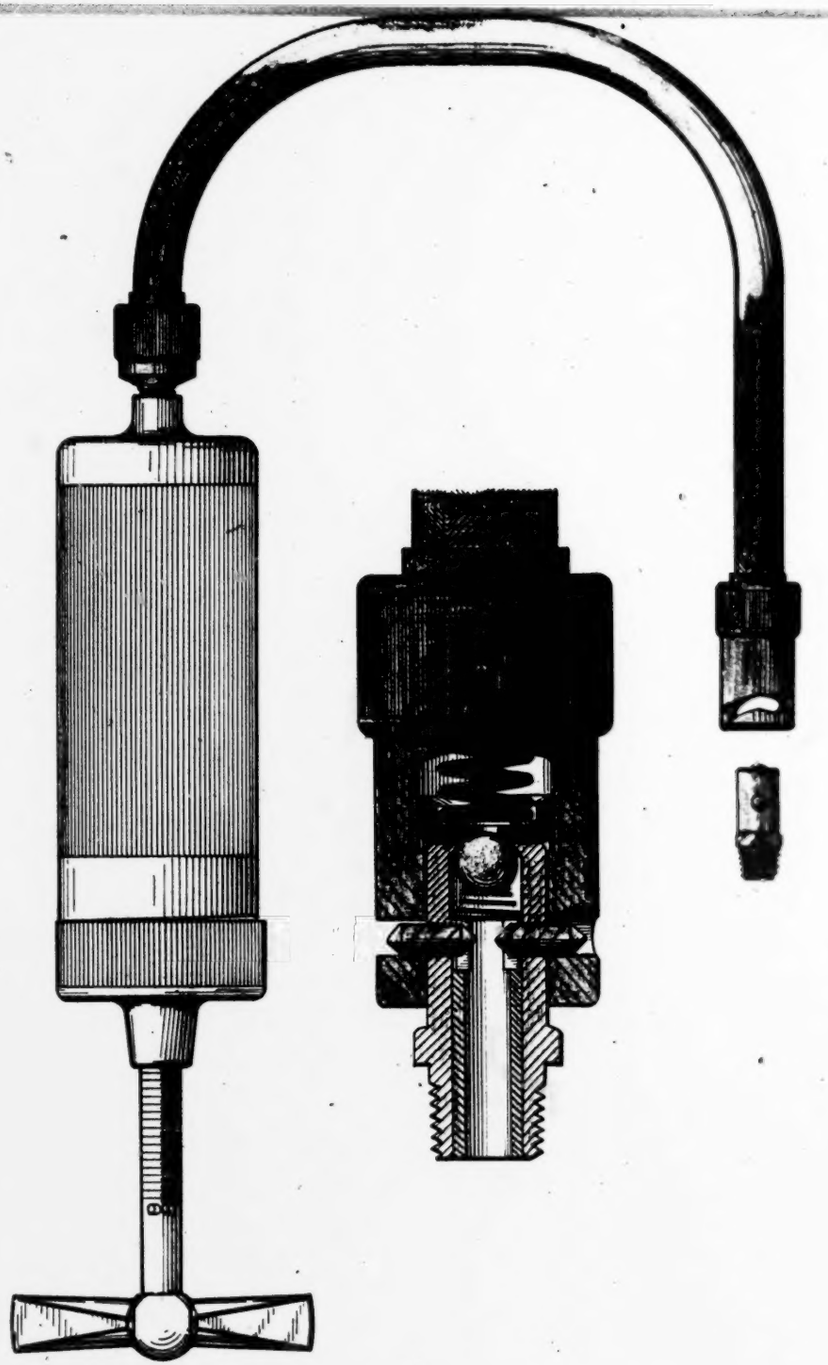

COPY OF PLAINTIFF'S EXHIBIT 45.

Drawing of Respondent's Compressor and Coupler Outfit of Plaintiff's Exhibit 5 Shown in Conjunction With Petitioners' Fitting of Plaintiff's Exhibit 17.

The combi
ing a spring-
of a pump,
a discharg
let of said pu
a second h
closed end of
to the other
a perforate
bore of said
means for
the closed en
and means
disk toward

The combi
ing a spring-
of a pump,
a discharg
let of said p
a second
closed end o
to the other
a perforat
bore of said
and mean
against the c
ber.

The combi
bearing (not
conducting h
a coupling
and provide
means for
ing a recept
provided w
a second
charge outle
members,
and means
member and
jacent ends
coupled.

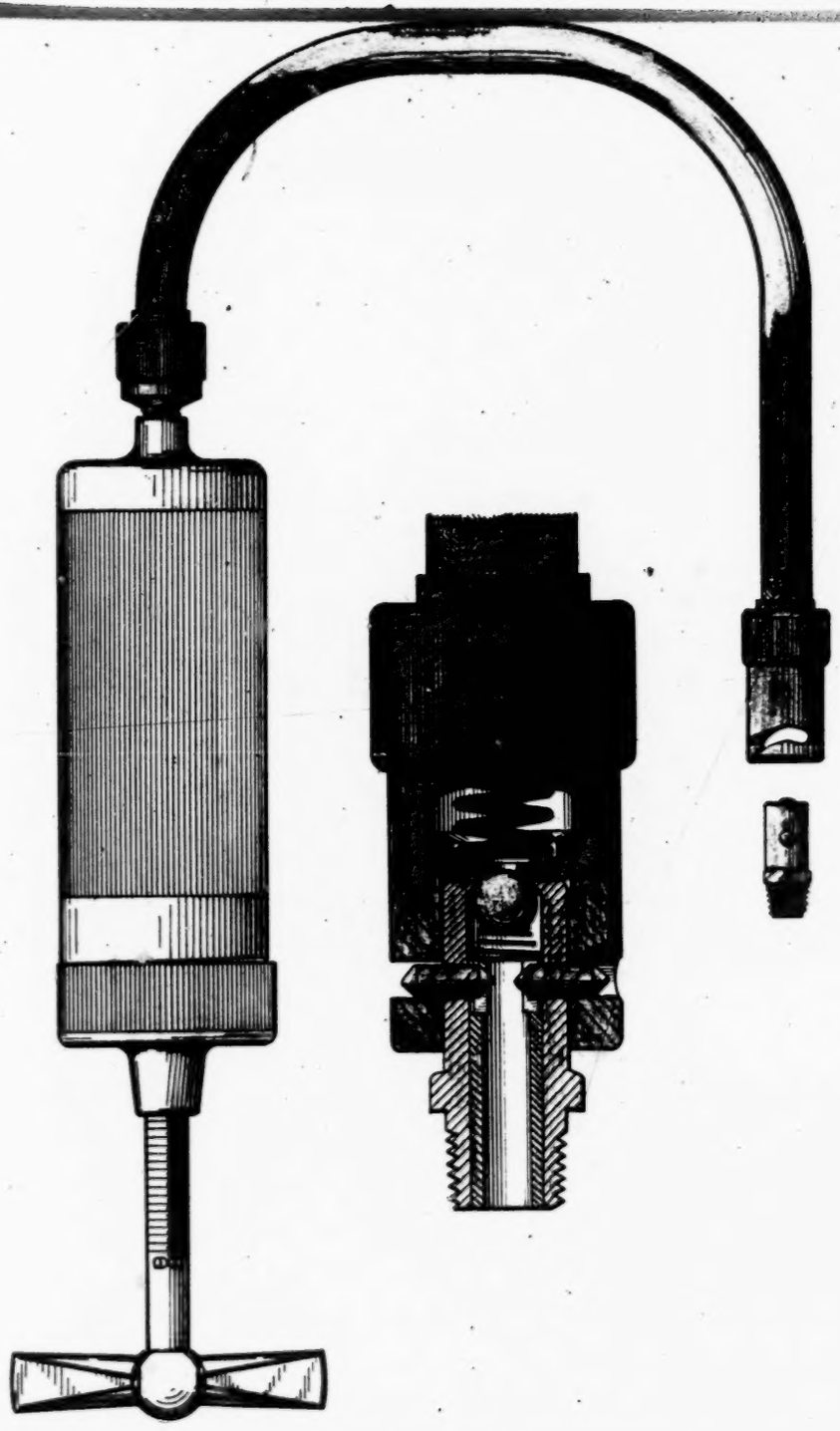

COPY OF PLAINTIFF'S EXHIBIT 45.

Drawing of Respondent's Compressor and Coupler Outfit of Plaintiff's Exhibit 5 Shown in Conjunction With Petitioners' Fitting of Plaintiff's Exhibit 17.

CLAIM 3.

The combination with a hollow coupling member having a spring-pressed closure,

of a pump,

a discharge conduit having one end secured to the outlet of said pump,

a second hollow coupling member for receiving the closed end of said first named coupling member secured to the other end of said conduit,

a perforated sealing disk mounted to reciprocate in the bore of said coupling member,

means for yieldingly urging said sealing disk against the closed end of said first named coupling member,

and means for limiting the movement of said sealing disk toward said second coupling member.

CLAIM 4.

The combination with a hollow coupling member having a spring-pressed closure,

of a pump,

a discharge conduit having one end secured to the outlet of said pump,

a second hollow coupling member for receiving the closed end of said first named coupling member secured to the other end of said conduit,

a perforated sealing disk mounted to reciprocate in the bore of said coupling member,

and means for yieldingly urging said sealing disk against the closed end of said first named coupling member.

CLAIM 8.

The combination with an apparatus having a part [the bearing (not shown)] to be lubricated, of a conduit for conducting lubricant to said part,

a coupling member secured to the end of said conduit and provided with a spring-pressed valve closure,

means for supplying lubricant to said conduit comprising a receptacle,

provided with a discharge outlet,

a second coupling member connected with said discharge outlet, means for detachably uniting said coupling members,

and means for sealing the joint between said coupling member and for removing excess lubricant from the adjacent ends thereof when said coupling members are uncoupled.

Gullborg Patent 1,307,734.

CLAIM 14.

The combination with a grease cup comprising a tubular member having one end flanged inwardly to provide a closure seat,

a closure,

a pin extending through said tubular member and from both sides thereof,

and a spring confined between said pin and closure, and tending to hold said closure on its seat,

of a grease pump having a discharge conduit,

and means co-acting with the ends of said pin for detachably connecting the discharge end of said conduit with said grease pump. (cup)

CLAIM 15.

The combination with a grease cup comprising a tubular member having a closure seat,

a closure,

a pin extending through said tubular member and from both sides thereof,

and a spring confined between said pin and closure, and tending to hold said closure on its seat,

of a grease pump having a discharge conduit,

and means co-acting with the ends of said pin for detachably connecting the discharge end of said conduit with said grease cup.

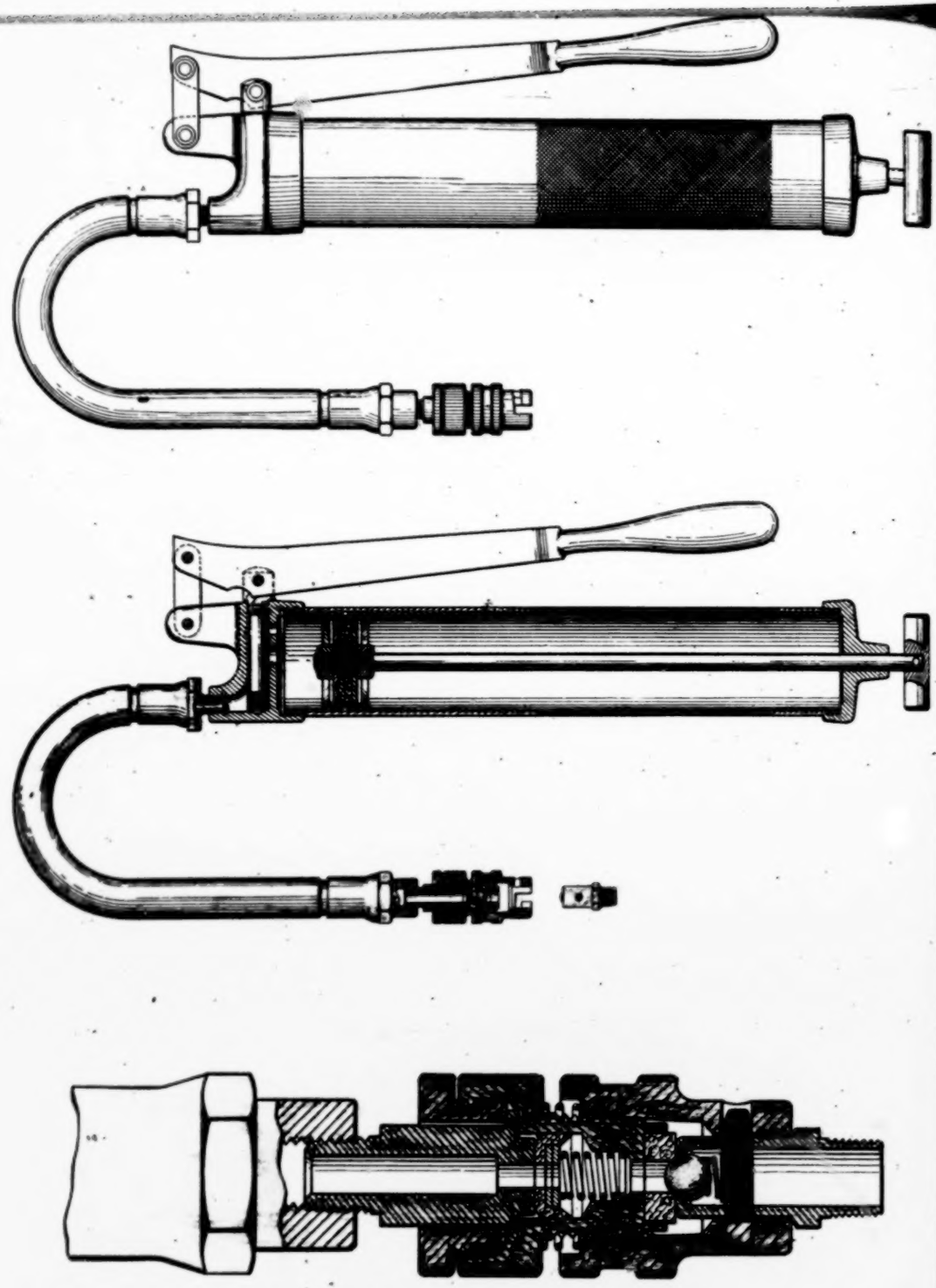

COPY OF PLAINTIFF'S EXHIBIT 36.

Drawing of Petitioners' Compressor and Coupler Outfit of Plaintiff's Exhibit 16 Shown in Conjunction with Respondent's Alemite Pin Fitting of Plaintiff's Exhibit 4.

As Plaintiff's Exhibit 36 (R., p. 155) there is in evidence a drawing of defendant-petitioners' compressor and coupler outfit of Plaintiff's Exhibit 16, shown in conjunction with an Alemite pin fitting of the type submitted as Plaintiff's Exhibit 4. As Plaintiff's Exhibit 45 (R., p. 269) there is in evidence a drawing of respondent's Alemite compressor and coupler outfit, of Plaintiff's Exhibit 5, shown in conjunction with defendant-petitioners' fitting of the type submitted as Plaintiff's Exhibit 17. Regardless of the size or form of respondent's compressor outfits, they terminate in an Alemite coupler of the form shown in the drawing, Plaintiff's Exhibit 45 (R., p. 269).

On the accompanying sheet containing a copy of the drawing of Plaintiff's Exhibit 45, we have copied claims 1, 2, 3, 4 and 8 of the Gullborg patent. The drawing has been colored and the corresponding elements in the claims have been underscored in the same colors.

On the accompanying sheet we have reproduced Plaintiff's Exhibit 36, a drawing of defendant-petitioners' compressor and coupler outfit of Plaintiff's Exhibit 16, which is shown in conjunction with an Alemite pin fitting, a specimen of which is in evidence as Plaintiff's Exhibit 4. In one figure the coupler and fitting are shown enlarged. The sheet also contains claims 14 and 15 of the Gullborg patent. The drawing has been colored and the corresponding elements in the claims have been underscored in the same colors, to facilitate the court's application of the claims to the combination.

In view of some of the arguments which have been addressed to the Court, it is perhaps worthy of particular note that:

(1) Claims 14 and 15, based as they were upon Gullborg's earlier invention as disclosed in his application filed on February 11, 1918, read clearly, smoothly, and exactly upon the disclosure of that earlier application as shown in its drawings and specification (*i. e.*, the drawings and specification of patent No. 1,307,733, R., pp. 212-214).

(2) These claims 14 and 15 read clearly, smoothly, and exactly upon the defendant-petitioners' compressor when combined with the plaintiff-respondent's fittings as shown in Plaintiff's Exhibit 36 (reproduced in our second insert).

(3) Claims 1, 2, 3, 4 and 8 cannot be read at all upon the disclosure of Gullborg's earlier application of February 11, 1918, as shown in his drawings and specifications of that date and as contained in his issued patent No. 1,307,733, for the reason that the sliding sealing disk and its associated spring had not even been thought of, and are therefore absent in the drawings and specifications as filed on February 11, 1918.

(4) These claims 1, 2, 3, 4 and 8 do read clearly, smoothly, and exactly upon the defendant-petitioners' fittings when combined with the plaintiff-respondent's compressor as shown in Plaintiff's Exhibit 45 (reproduced in the first of our inserts).

At the outset of the trial, and throughout the consideration of this case in the District Court and in the Court of Appeals, all of these claims 1, 2, 3, 4, 8, 14 and 15, were conceded to be valid (R., pp. 98, 127).

Although the petitioners have attempted now to withdraw their concession of validity, and have urged this Court to hold all of these claims invalid, it is not even now urged on behalf of the petitioners that these

claims do not clearly, smoothly, and exactly describe the combinations which the ultimate users make up, precisely as shown in the exhibit drawings reproduced in our two inserts.

Even now, in this Court, it is conceded by the petitioners that if the claims of the Gullborg patent in suit are to be read and applied just as they appear in the patent in suit, and just as they must be interpreted in the light of the devices which they were drawn to describe, they apply perfectly in every respect to the lubricating equipments into which the petitioners expected their customers to incorporate the parts sold by them. It is conceded that if these claims are to be read as they were written and as they apply to the disclosures of the applications in which they were originally made and finally allowed then the petitioners have contributorily infringed them.

No Court Is Warranted in Rewriting a Patentee's Combination Claims to Incorporate Additional Elements Which the Patentee Chose Not to Include.

We have seen that claims 1, 2, 3, 4 and 8 of Gullborg's patent do not include as elements of the recited combinations, the various details of the pin fitting part as narrowly set forth in claims 14 and 15, *e. g.*, "a tubular member having one end flanged inwardly to provide a closure seat, a closure, a pin extending through said tubular member and from both sides thereof, and a spring confined between said pin and closure and tending to hold said closure on its seat."

We have seen that the combinations of claims 14 and 15 do not include the "suction effect" details of claims 1, 2, 3, 4 and 8, *e. g.*, "a perforated sealing disk

slidably mounted in the enlarged portion of said bore, and a spring confined between the ends of said conduit and said disk for urging said disk against said first-named coupling member."

Yet, counsel for petitioners proclaims boldly that unless the Court is willing, in spite of the defendant-petitioners' formal and continued concession of its validity, to hold the plaintiff's patent invalid, then it is the duty of the Court completely to rewrite Gullborg's patent by incorporating into claims 1, 2, 3, 4 and 8 all of the pin fitting elements found in claims 14 and 15, and to rewrite claims 14 and 15 by incorporating into them all of the suction effect coupler elements found in claims 1, 2, 3, 4 and 8. As counsel put it, this must be done

> "by construing the pin-fitting claims as though also limited to the specific suction-effect grease-gun disclosed in the patent, and by construing the suction-effect claims as also limited to the specific pin-fitting disclosed in the patent, as in *Alemite* v. *Lubrair*, 62 Fed. (2d) 899 (C. C. A. 1) and *Hollingshead* v. *Bassick*, 73 Fed. (2d) 543 (C. C. A. 6)." (Petitioners' Brief, p. 54.)

In other words, all of the claims must be rewritten so as to make them all just alike.

This astonishing proposal and procedure fly directly in the face of a long line of judicial authority and precedent.

It is well settled that limitations or elements contained in one claim of a patent are not to be read into another claim from which they are absent so as to make the two coextensive. This rule was recognized by the Supreme Court in *Symington Co.* v. *National Malleable Castings Co.*, 250 U. S. 383, wherein it said through Mr. Justice Van Devanter, at page 385:

"One of the elements called for by the claims in the Byers patent which were sustained is a 'pocket' or housing, which is to hold other parts in place. The corresponding element of the Emerick patent is described as 'counterpart castings,' and is in two parts. Whether the Byers pocket was to be integral or might be in two or more parts is a matter about which the two courts differed. In the Maine suit it was held that the claims were not limited to an integral pocket, but in the Illinois suit the ruling was the other way. The former view, as it seems to us, is the right one. **There is nothing in Byers' claims which were sustained, indicating that the pocket is to be integral, while there is a distinct call for such a pocket in claim nine. The difference in terms points persuasively to a difference in purpose, and the specification does even more, for it says, 'The pocket may be cast in a single piece.' This is the common form of designating an admissible alternative in such instrument.**"

This doctrine, that different claims of a patent may not be rendered coextensive or as limited to the same elements by the indiscriminate transposition of elements from one claim in which they appear to another from which they have been expressly omitted, has been uniformly adhered to by the several Circuit Courts of Appeals.

In the case of *Skelton* v. *Baldwin Tool Works*, 58 Fed. (2d) 221, the Fourth Circuit Court of Appeals, at page 227, expresses the rule as follows:

"The claims in suit do not expressly limit the structure to a unitary form; and the limitation in other claims may not be used to restrict those upon which the plaintiffs rely. *Symington Co.* v. *National Mal. Casting Co.*, 250 U. S. 383, 39 S. Ct. 542, 63 L. Ed. 1045; *Pangborn* v. *Sly Mfg. Co.*, (C. C. A.), 284 F. 217."

In the case of *Parsons* v. *Seelye,* 100 Fed. 455, the First Circuit Court of Appeals said, at page 457:

> "The court below took the view that it could not disregard what the patentee terms one of the most important features of his invention, that of counterweighting the beam, E; and upon this view the counterweighting was there treated as a necessary and important feature of the mechanism described in claims 3, 4, and 5, and, as the defendant's machine did not employ the counterweighting feature, that infringement did not exist. We cannot take this view, for the reason that the counterweighting feature is not stated as an element of either claims 3, 4, or 5, and it is not essential to the effective operation of the mechanism described in [illegible]aims. The feature of counterweights, therefore, is quite foreign to the combination of elements involved in the intermitting and driving mechanism expressly described in these claims. It is true that counterweights are included in claims 1, 2, 6, and 7, as a specific element of the combination there described; but these claims are abandoned, so far as this case is concerned, for that reason. But the idea that the inventor deemed counterweights essential, under claims 3, 4, and 5, where they are not named as an element, is not expressed, and it is not easy to assume that they were a necessary element of the combination described in such claims. Moreover, while they are described as an important feature, the general expression describing such feature is limited by what follows, wherein he describes their function as relating to the balance and cross balance in heavy machines. It is quite possible that Parsons over-estimated the importance of this feature in this respect; but, under the circumstances, we do not think this general remark, afterwards materially qualified, and limited to the function of maintaining balance and cross balance in heavy machines, should be read into claims 3,

> 4, and 5, where it does not exist, where it was not expressed, and where it is not essential, as all concede, for the purpose of operating that which is quite complete without it."

The First Circuit Court of Appeals stated this doctrine very concisely in *Bresnahan et al.* v. *Tripp*, 102 Fed. 899, 900:

> "The contention is also opposed to the general rule of construction, applicable where there are several claims, to the effect that, if some of the claims are limited to details those which remain are *prima facie* not to be fettered by insisting that they contain, as necessary elements, the particulars which are specifically covered elsewhere."

See also to the same effect, the opinion of Judge Woods for the Fourth Circuit Court of Appeals in the case of *Pangborn Corporation* v. *Sly Mfg. Co.*, 284 Fed. 217, and the extended discussion of the principles of claim construction by Judge Denison, speaking for the Sixth Circuit Court of Appeals in the case of *Wm. B. Scaife & Sons Co.* v. *Falls City Woolen Mills*, 209 Fed. 210.

1. PETITIONERS' THEORY OF "NON-INFRINGEMENT," IF SUSTAINED, WOULD LIMIT EVERY PATENT TO PRECISELY THAT WHICH IS ILLUSTRATED, AND THAT ALONE.

The petitioners' new and astonishing and previously unconsidered theory of "non-infringement" is based solely upon the contention that Section 4888 of the Revised Statutes (U. S. Code, Title 35, Section 33), (in requiring that the inventor, after describing in the specification and portraying in the drawings his alleged invention or discovery, shall "particularly point

out and distinctly claim" his invention), means that the patent claim must particularly point out and distinctly claim *all* of the details of the embodiment illustrated and described in the accompanying drawings and specification.

This contention of petitioners is so distinctly contrary to the long established rules of patent law that in our opinion it scarcely needs an answer. If it were sound, no patent would be of the slightest value.

It has always been recognized that the statutes require the inventor merely to disclose the "best"* form known to him for the practice of his invention, and do not require him to describe and portray every possible embodiment. The very purpose of the patent statute in requiring the inventor to "particularly point out and distinctly claim" his invention, is to require the inventor, in his claims, to distinguish the real heart of the invention from the particular form in which the inventor has exemplified it in his drawings and specifications. If the inventor could claim no more than all of the details of the form illustrated, all that would be necessary would be a set of drawings. The claim of a patent, however, under established rules is for the very purpose of defining the breadth of the monopoly to be asserted by the inventor. As stated by Mr. Jus-

---

* Before any inventor or discoverer shall receive a patent for his invention or discovery he shall make application therefor, in writing, to the Commissioner of Patents, and shall file in the Patent Office a written description of the same, and of the manner and process of making, constructing, compounding, and using it, in such full, clear, concise, and exact terms as to enable any person skilled in the art or science to which it appertains, or with which it is most nearly connected, to make, construct, compound, and use the same; and in case of a machine, he shall explain the principle thereof, and **the best mode in which he has contemplated applying that principle**, so as to distinguish it from other inventions; and he shall particularly point out and distinctly claim the part, improvement, or combination which he claims as his invention or discovery. The specification and claim shall be signed by the inventor. (R. S. Sec. 4888; Mar. 3, 1915, c. 94, Sec. 1, 38 Stat. 958; Title 35, U. S. Code, Section 33).

tice Bradley in *White* v. *Dunbar,* 119 U. S. 47, 52, 30 L. Ed. 303, 304:

> "The claim is a statutory requirement, prescribed for the very purpose of making the patentee define precisely what his invention is."

That the patent is not to be limited to all of the details of the embodiment shown in the patent drawings or described as the preferred embodiment in the specification, was long ago settled by this Court.

In the "Corn Planter Patent Cases," *Brown* v. *Guild,* 90 U. S. 181, 221, 23 L. Ed. 160, 169, Mr. Justice Bradley said:

> "By this description, Brown was evidently attempting to show how simply and cheaply the thing could be made, not that it was to be confined to that specific form. It might as well be contended that he intended to confine his invention to wood, and that a machine made of iron or other metal, though made in precisely the same form, would not be an infringement, because it would not have the same quality of cheapness and simplicity which he describes. In fine, we do not understand Brown as limiting his invention to this cheap form, but as showing how cheaply and simply it would bear to be constructed. This, we think, is the fair meaning of his language when taken in connection with the whole specification. A literal construction is not to be adopted where it would be repugnant to the manifest sense and reason of the instrument."

The best and most concise statement of the rule as we understand it to be, and directly contrary to petitioners' present contention, is contained in the opinion of Mr. Justice Stone in the case of *Smith* v. *Snow,* decided by your Honors on January 7, 1935, and reported in 294 U. S. 1; wherein it was stated, at page 11:

"We may take it that, as the statute requires, the specifications just detailed show a way of using the inventor's method, and that he conceived that particular way described was the best one. But he is not confined to that particular mode of use since the claims of the patent, not its specifications, measure the invention. *Paper Bag Patent Case* (*Continental Paper Bag Co.* v. *Eastern Paper Bag Co.*), 210 U. S. 405, 419, 52 L. Ed. 1122, 1128, 28 S. Ct. 748; *McCarty* v. *Lehigh Valley R. Co.*, 160 U. S. 110, 116, 40 L. Ed. 358, 361, 16 S. Ct. 240; *Winans* v. *Denmead*, 15 How. 330, 343, 14 L. Ed. 717, 722. While the claims of a patent may incorporate the specifications or drawings by reference, see *Snow* v. *Lake Shore & M. S. R. Co.*, 121 U. S. 617, 630, 30 L. Ed. 1004, 1008, 7 S. Ct. 1343, and thus limit the patent to the form described in the specifications, it is not necessary to embrace in the claims or describe in the specifications all possible forms in which the claimed principle may be reduced to practice. It is enough that the principle claimed is exemplified by a written description of it and of the manner of using it 'in such full, clear, concise, and exact terms' as will enable one 'skilled in the art to make, construct, compound and use the same.' "

2. THERE IS NO WARRANT FOR THE APPLICATION OF THE PETITIONERS' NEW THEORY THAT THE COURT SHOULD RELIEVE THE DEFENDANT-PETITIONERS OF LIABILITY FOR INFRINGEMENT "BY GIVING THE GENERIC REFERENCE TO THE OLD DEVICES IN THE CLAIMS SUCH A LIMITED INTERPRETATION AS WOULD EXCLUDE FROM THEIR SCOPE THE DEFENDANTS' ADMITTEDLY OLD (*sic*) DEVICES." (Petitioners' Brief, p. 46.)

At 168 places in his brief, counsel for the petitioners refers to the "old" or the "admitted" or the "admittedly old" this, that or the other. Not once, how-

ever, does he cite or point to the record or to any other evidence showing when or where or how these devastating "admissions" were made. The simple and complete answer to counsel's assertions is our denial of having admitted any of the things attributed to us.

As to the 134 assertions in counsel's brief that this, that or the other thing was "old," it is to be observed that the only citations of the record in this regard are made by counsel for the petitioners on page 21 of his brief. At that place he refers to "Plaintiff-Respondent's *earlier* Gullborg patent No. 1,307,733 not in suit (R., pp. 212-14)." Gullborg patent No. 1,307,733 is not in any substantive sense "earlier" than Gullborg patent No. 1,307,734.

Both of these patents issued on the same day.

PETITIONERS' ASSERTION THAT GULLBORG PATENT IN SUIT NO. 1,307,734 MUST BE NARROWLY INTERPRETED (OR HELD INVALID!) IN VIEW OF THE ISSUE OF ANOTHER PATENT NO. 1,307,733 TO THE SAME GULLBORG ON THE SAME DAY, IS UTTERLY UNWARRANTED.

The only "prior art" in the record to which petitioners refer or could refer in support of their assertions as to what was old and as to what was "admittedly old," is Gullborg patent No. 1,307,733 (R., pp. 212-214).

We are not misunderstanding,—we are not misstating the basis for petitioners' assertions; for, on page 21 of petitioners' brief, they say:

> "In the case at bar, the combination of a grease pump, of a hose, of a hose-coupler, and of a grease-cup (to be temporarily engaged by the latter), was admittedly old prior to the filing of the application for the patent here in suit . . . as

> disclosed in plaintiff-respondent's earlier Gullborg patent No. 1,307,733 not in suit (R., pp. 212-14)."

Section 4886 of the Revised Statutes (Title 35, Section 31 of the United States Code)* specifies the requirements for the patentability of an invention. A very simple consideration of the requirements of the statute shows that Gullborg's patent No. 1,307,733 has no bearing whatsoever upon the validity or scope of Gullborg's patent No. 1,307,734. Thus:

> "not known or used by *others* in this country."

What was known by Gullborg was not something known by "others",

> "before his invention or discovery thereof."

Gullborg may have made the invention claimed in patent No. 1,307,734 after he filed his application for patent No. 1,307,733, or at the time he filed his application for patent No. 1,307,733, or before he filed his application for patent No. 1,307,733, but Gullborg could not have known of his own invention before he made his invention or discovery. His invention and his knowledge were necessarily simultaneous.

> "not patented or described in any printed publication in this or any foreign country before his invention or discovery thereof."

---

* Section 4886, R. S. U. S., Title 35, Section 31, U. S. Code, reads as follows:

> "Inventions patentable. Any person who has invented or discovered any new and useful art, machine, manufacture, or composition of matter, or any new and useful improvements thereof, not known or used by others in this country, before his invention or discovery thereof, and not patented or described in any printed publication in this or any foreign country, before his invention or discovery thereof, or more than two years prior to his application, and not in public use or on sale in this country for more than two years prior to his application, unless the same is proved to have been abandoned, may, upon the payment of the fees required by law, and other due proceeding had, obtain a patent therefor. (R. S. Sec. 4886; Mar. 3, 1897, c. 391, Sec. 1, 29 Stat. 692.)"

Even if the invention claimed in patent No. 1,307,734 were fully disclosed in Gullborg's patent No. 1,307,733, or in his application of February 11, 1918, for that patent, it would not, by virtue of Gullborg's patent No. 1,307,733, have been patented or described before Gullborg's invention or discovery of the subject-matter therein patented or described.

> "not patented or described in any printed publication in this or any foreign country . . . more than two years prior to his application."

Gullborg's patent No. 1,307,733 was issued on June 24, 1919, the same day as his patent No. 1,307,734, and not, therefore, "more than two years prior to" Gullborg's application of December 21, 1918.

That where two patents issue on the same day there is no presumption that either issued prior to the other, no matter which bears the higher patent number, is well settled. As to this rule there never has been and could not be any question. Both patents issuing on the same day, expire on the same day. That one bears a higher number than the other is no indication that the patents were even signed and sealed in this order.

Even if Gullborg's two patents had not issued on the same day,—even if they had issued years apart, the law is well settled that if the two applications were copending in the Patent Office, then the patentee's prior patent is not "prior art" as against a subsequent patent to the same inventor. There is no conflict between the authorities as to this matter. At one time the Second Circuit Court of Appeals held a view which diverged somewhat from that universally held by the other circuits, but in the Sixth Circuit Court of Appeals' decision in *Southern Textile Machinery Co.* v. *United Hosiery Mills Corp.*, 33 Fed. (2d) 862, reference was made to

the more recent view of the Second Circuit Court of Appeals as expressed, for example, in the opinions in *Traitel Marble Co.* v. *U. T. Hungerford Brass & Copper Co.*, 22 Fed. (2d) 259, in *Gibbs* v. *Triumph Trap Co.*, 26 Fed. (2d) 312, and in *Claude Neon Lights, Inc.* v. *Machlett & Sons*, 27 Fed. (2d) 702.

Since those decisions by the Second Circuit Court of Appeals, all of the circuits have been in agreement upon this rule. To illustrate this rule we quote briefly from the decisions of the Sixth Circuit Court of Appeals in *Sandy MacGregor Co. et al.* v. *Vaco Grip Co.*, 2 Fed. (2d) 655, and *Southern Textile Machinery Co.* v. *United Hosiery Mills Corp.*, 33 Fed. (2d) 862, and from the decision of the Second Circuit Court of Appeals in *Traitel Marble Co.* v. *U. T. Hungerford Brass & Copper Co.*, 22 Fed. (2d) 259.

Sandy MacGregor Co. et al. v. *Vaco Grip Co.*, 2 Fed. (2d) 655, 656 (C. C. A. 6, December 11, 1924—Denison, Circuit Judge):

> "The second patent is attacked because the details therein claimed are said not to show any invention as compared with the disclosure of the earlier numbered patent; and this earlier numbered patent is said to be, with reference to the other, a part of the prior art.
>
> "We can see no basis for this latter proposition. It loses sight of the fact that the question of prior art comes into the patent law through the statutory provision that a patent shall be invalid if the patentee was not the first inventor. The whole question obviously must have reference, not to the date of the patent, but to the date of the patentee's invention.
>
> "Nor do we understand how, save for some arbitrary purpose and by arbitrary rule, there can be any priority of grant or of publication as between two patents issued to the same patentee on the

same day. Courts ordinarily decline to recognize fractions of a day; but to find this priority between simultaneous patents bearing successive numbers distinctions of time would come down to a matter of seconds. The issue clerk might and probably would recognize the request of the patentee as to priority in number between two patents on the same day; but, lacking such request and compliance, the result would depend upon which one the clerk happened to pick first out of the several hundred issuing on that day.

"It seems to us to be beyond dispute, upon the principles involved, that, if the combination *a b c* when first made by the patentee was invention, and if the addition of the element *d* adds utility, even though of itself it would not involve invention if compared with the earlier invention of *a b c* by some one else, yet the patentee is entitled to claims upon *a b c* and upon *a b c d*, and the validity of the second claim may rest, in part, upon its inclusion of the invention more broadly stated in *a b c*. Most naturally these claims would appear as generic and specific in the same patent; but, if the rules of the Patent Office require, or if the patentee desires and the rules of the Patent Office permit, the issue of separate patents to the same inventor, and they are issued the same day, it cannot be said that the one which bears the earlier application date or issue number is part of the prior art as against the other one—always assuming that 'prior art' is a matter not touching dedication or double patenting. This was the conclusion we reached upon a discussion of the authorities in *Higgin Co.* v. *Watson*, 263 F. 378, 385, and even in a case where the patents were not simultaneous. The order of their issue was not important in that case save as to the question of double patenting. In the present case the patentee, Smith, at the date of filing his second application, might have canceled the first one and filed an application showing both the original and improved forms of his device, and containing most,

if not all, of the claims here in suit. That he did not do so but kept his improvement patent separate, at the same time avoiding any question of dedication or double patenting, ought not to deprive him of the benefit of otherwise valid claims."

Southern Textile Machinery Co. v. *United Hosiery Mills Corporation* (C. C. A. 6, June 2, 1929), 33 Fed. (2d) 862. (Hickenlooper, Circuit Judge):

"The bill of infringement of complainant's patent, No. 1,050,433, issued January 14, 1913, upon application of Edwin O. Davis, for a machine for uniting knit fabrics, commonly called a looping machine, was dismissed in the district court on the ground that the invention which was the subject of claim 13 in suit was fully disclosed in a patent, No. 1,030,432, issued to the same patentee on the same date, January 14, 1913, but bearing an earlier filing date.

"On February 22, 1909, Davis filed his original application which disclosed the invention in suit and claimed it both in the language of the claim in suit and in more comprehensive claims. Having some difficulties in securing allowance of the broader claims, Davis filed a second application May 14, 1910, likewise disclosing the invention, containing the claim in suit, which had been transferred from the first to the second application, and also containing the broader claims. On June 2, 1910, the claims of the present invention were withdrawn from the earlier application. Both patents issued January 14, 1913. The applications were thus copending, and the effect of the procedure taken in the Patent Office was that of a division. It is now practically conceded by the defendant that the mere fact that the invention was disclosed in the earlier application, from which claims therefor were canceled during copendency of the second application, will not of itself invalidate the patent issued upon the second application containing the claims canceled from the first. This

is quite in accord with the almost uniform adjudication in this and other circuits. *Toledo Plate & Window Glass Co.* v. *Kawneer Mfg. Co.*, 237 F. 364, 367 (C. C. A. 6); *Higgin Mfg. Co.* v. *Watson*, 263 F. 378, 385 (C. C. A. 6); *Traitel Marble Co.* v. *Hungerford Brass & Copper Co.*, 22 F. (2d) 258 (C. C. A. 2); *Ide* v. *Trorlicht, etc. Carpet Co.*, 115 F. 137, 145 (C. C. A. 8); *Montgomery Ward & Co.* v. *Gibbs*, 27 F. (2d) 466 (C. C. A. 4). The apparently conflicting decision in *National Electric Ticket Register Co.* v. *Automatic Ticket Register Corp.*, 15 F. (2d) 257 (C. C. A. 2) is in substance repudiated by the same court in the *Traitel Marble Co. case, supra,* subsequently followed in *Gibbs* v. *Triumph Trap Co.* (C. C. A.), 26 F. (2d) 312, and *Claude Neon Lights, Inc.* v. *Machlett & Son* (C. C. A.), 27 F. (2d) 707."

Traitel Marble Co. v. *U. T. Hungerford Brass & Copper Co.* (C. C. A. 2), 22 Fed. (2d) 259, 260. (L. Hand, Judge):

"Calkins' earlier patent was not part of the prior art, and it is not necessary to the validity of the claims in suit that they should embody a patentable advance over the earlier disclosure. The two applications were copending, and it is a matter of indifference which of the patents issued first, provided that the claims are for separate inventions. This was held after elaborate discussion in *Miller* v. *Eagle Mfg. Co.*, 151 U. S. 186, 14 S. Ct. 310, 38 L. Ed. 121, and had been already decided in *Suffolk Co.* v. *Hayden*, 3 Wa., 315, 18 L. Ed. 76. It has often been decided in this court (*Electrical Accumulator Co.* v. *Brush Electric Co.*, 52 F. 130; *Thomson, etc., Co.* v. *Elmira, etc., Co.*, 71 F. 396; *Kinnear Mfg. Co.* v. *Wilson*, 142 F. 970; *Victor, etc., Co.* v. *American, etc., Co.*, 145 F. 350), and is the law elsewhere (*Thomson, etc., Co.* v. *Ohio Brass Co.*, 80 F. 712 (C. C. A. 6); *Century, etc., Co.* v. *Westinghouse, etc., Co.*, 191 F. 350 (C. C. A. 8).

The issuance of the first patent does not abandon the unclaimed matter in its disclosure, the pendency of the second application rebutting any such inference.

". . . all we have to do in the case at bar is to decide whether the claims in suit are for a separate invention from the original claims allowed upon the first application. Clearly the test of this question is not whether the step between the later claims and the earlier required invention. The whole discussion in the books presupposes that the disclosure would be fatal to the new claims, if it were a part of the prior art, and upon the issue of invention the disclosure, not the claims, is relevant. Where the earlier claims are for one feature of the disclosure and the later for another, no difficulty can arise; but where the earlier claims are generic and the later specific, or vice versa, the matter is not so plain. We shall for argument assume that the original claims of the first patent need not have been strictly limited to the disclosure, and, if so, they covered both continuous and discontinuous lower edges. Nevertheless the continuous edge was not originally shown, and the claims in suit added it as a new feature, designed to effect a result which would not follow upon the practice of the first disclosure, except in case it had been deliberately varied. It is familiar law that a species claim may be a good invention, notwithstanding that the genus is already in the public demesne, which implies that it is a separate invention, and the case at bar is as much an instance of that situation as though the distinction between the old and new claims were patentable. The point was raised and discussed in *Thompson-Houston Co.* v. *Ohio Brass Co., supra,* in a case where the generic patent issued last, a much more serious situation for the patentee."

The rule thus expressed in the Circuits is a mere application of the rule as earlier stated by this Court

in the case of *Suffolk Mfg. Co.* v. *Hayden,* 3 Wall. 315, 18 L. Ed. 76. We quote briefly from this decision, as follows:

> "The suit is brought upon a patent granted to Hayden, the plaintiff below, on the 1st of December, 1857, for an improvement in long trunks for cleaning cotton, ...
>
> "The defendants, in the course of their defense, gave in evidence another patent to the plaintiff, dated 17th March, 1857, for a prior improvement in the long trunk, enlarging one end of the same; and in the specification, a description was given of the improvement patented the December following, and on which the present suit is brought; but in which elder patent the improvement was not claimed; and insisted that the description and the omission to claim in the earlier patent, operated as an abandonment or dedication of it to the public, and that for this reason the subsequent patent of 1st December was void. But the answer to this ground of defense is, that it appeared that Hayden, the patentee, had pending before the commissioner of patents an application for this same improvement at the time he described it in the specification of the 17th March, which was, doubtless, the reason for not claiming it in this patent. The description in no sense affected this application thus pending before the commissioner; and, while it remained before him, repelled any inference of abandonment or dedication from the omission to again claim it."

The reason for the rule thus uniformly expressed by the authorities is, of course, obvious. Since the patent statutes authorize the grant of a patent to the first inventor, that requisite cannot be shown to be non-existent by showing that the same inventor was himself prior, and of course there can be no abandonment or dedication of an invention to the public in the face of an express claim for a patent thereon.

Since Gullborg's patent No. 1,307,733 is the only "prior art" in the record which by any possibility could support the assertions of counsel for the petitioners as to what was old and as to what was "admittedly old," and since that patent is to the same inventor and issued on the same day as the patent in suit No. 1,307,734, there is no basis, in view of the statute and these well-established rules of law, for petioners' assertions that patent No. 1,307,734 must be narrowly construed (or held invalid) in view of the "prior art".

The only item of "prior art" in the entire record is the French Seng patent No. 468,869, which is printed on pages 272-275 of the record. It does not disclose the things asserted by counsel to be "old" and "admittedly old". The defendant-petitioners have not regarded it as of sufficient importance even to warrant its translation into English.

Counsel for the petitioners apparently realizes that the Seng patent does not provide any warrant for his assertions, and that Gullborg's patent No. 1,307,733 is not really available as "prior art" against Gullborg himself. It is for these reasons, doubtless, that counsel endeavors to support his assertions by reference to "the British Alley patent No. 21,893 of 1906, and plaintiff-respondent's own still-earlier Winkley patent No. Re. 14667, cited by the Court of Appeals for the Sixth Circuit in the case of *Lyman* v. *Bassick*, 18 Fed. (2d) 29,—adjudicating the Gullborg patent here in suit."*

*In and by the very opinion to which counsel for the petitioners refers in an effort to supplement the record in this case by matter which was never available for testimony, discussion, argument, or decision herein, the Sixth Circuit Court of Appeals held all of the claims in suit, Nos. 1, 2, 3, 4, 8, 14 and 15, to be valid and to have been contributorily infringed by the sale of non-suction effect compressors, and by the sale of crosspinless fittings identical in every legal aspect with the defendant's devices in the present suit!

It would be manifestly unfair to the plaintiff to have the Court go outside the record in this case and to base its decision upon what meager reference may be found to these alleged prior patents in the opinions of other courts in other cases. The patents do not show or describe the things which counsel assert to be "old" and "admittedly old." We suspect that this Court will not be inclined to guess what these other patents may disclose from what other courts in other cases may have said relative to them.

Nothing in the prior art discloses any such compressors or couplers or fittings as those sold by the petitioners for intended use in the combinations of the patent in suit. Nothing in the prior art requires or warrants a narrowed "interpretation" of the claims of the patent in suit.

No "File-Wrapper" Estoppels Exist or Are Even Alleged to Exist.

Sometimes the range of equivalents accorded to the elements of a patent claim is restricted by cancellations and amendments made in the Patent Office to overcome rejections on one score or another. In the present case the file-wrappers and contents of the Gullborg patents were not offered in evidence by the defendants. They were offered by the plaintiff to show the origin and meaning of claims 14 and 15 of patent No. 1,307,734. While these file-wrappers are therefore available to counsel for the petitioners, there is no contention,—not the slightest suggestion, that these "file-wrappers" afford any basis of estoppel or otherwise upon which to urge a narrow range of equivalents for any of the elements enumerated in any of the claims.

3. The Defendant-Petitioners' Third Theory of "Non-Infringement" Is Wholly New in This Court. It Is Non-Existent in the Law of Patents. It Is Not Found In Or Supported By the Cited Authorities. It Is Repugnant to Established Law, and Incapable of Application.

This third newly concocted theory of non-infringement was not pleaded, presented, argued or considered in the lower courts. It is here advanced for the first time. As stated by counsel for the petitioners, the theory is that a finding of the defendant-petitioners' non-infringement might be reached

> "by holding that the so-called 'combination' claims would not be infringed by the defendant's sale of any old devices which may be included in the claims generically, but will be held infringed only if the defendant appropriates *the* inventive part of the claims or the **gist** of the claims as in the cases of *Harvey Hubbell* v. *General Electric,* 267 Fed. 564 (C. C. A. 2); *Morgan Envelope Co.* v. *Albany Paper Co.,* 152 U. S. 425; 38 L. Ed. 500; *Carbice Corporation* v. *American Patents Development Corp.,* 283 U. S. 27; 51 Sup. Ct. 334." (Petitioners' Brief, p. 47.)

(The bold face emphasis upon the word "gist" is that of petitioners' counsel.)

"The **gist** of the claims"!

What is the **"gist"** of a claim to a combination?

With the exception of methods and processes, almost every invention is a combination of old elements. The first airplane was a combination of an old engine, an old propeller, old kites and old rudders. The first radio broadcasting equipment was a combination of old wire, old tubes, old filaments, old telephones. It is difficult to think of any invention which by analy-

sis cannot be resolved into a combination of elements, each of which was, in and of itself, old and well known.

We have heretofore alluded to the cases of *Leeds & Catlin* v. *Victor,* 213 U. S. 301, and 213 U. S. 325, which involved the Berliner patent covering the Victor Company's phonograph. It was this case of *Leeds & Catlin* v. *Victor* which the Sixth Circuit Court of Appeals referred to in its decision in *Lyman* v. *Bassick and Six Other Cases,* 18 Fed. (2d) 29, 38, involving this same Gullborg patent No. 1,307,734, as "on all fours" with the present case.

It was indeed in connection with its discussion of questions of contributory infringement identical in every respect with the questions involved in the present suit that in *Leeds & Catlin* v. *Victor* this Court made its famous statement of the attributes of a combination claim. In its opinion in this controllingly parallel case, this Court said:

> "A combination is a composition of elements, some of which may be old and others new **or all old** or all new. It is, however, the combination that is the invention, and is as much a unit in contemplation of law as a single or non-composite instrument. Whoever uses it without permission is an infringer of it. Whoever contributes to such use is an infringer of it. It may be well here to get rid of a misleading consideration. It can make no difference as to the infringement or non-infringement of a combination that one of its elements or all of its elements are unpatented."

Given an invention comprising a combination of elements which are "all old";—Who is to decide which element constitutes the "gist" of the invention? How is he to decide which element constitutes the "gist"?

There is no "gist." The invention inheres in the combination. It is the **entire** combination which "is as

much a unit in contemplation of law as a single or non-composite instrument." The very definition of a combination patent claim precludes the possibility of selecting any one element or any sub-group of elements as constituting the "gist" of the invention. It is only by flying in the face of this revered authority that counsel for the defendant-petitioners can assert, as he does, that Rogers and Dusenberry had the right to bring about the organization of the Gullborg combination by supplying an element or a group of elements in which the "gist" of the invention did not inhere. Obviously, there could have been no element; obviously, there could have been no sub-group of elements, in which the "gist" of the invention inhered. If, therefore, counsel for the defendant-petitioners is right in his contention that his clients had the right to supply some of the elements, then anybody and everybody else had an equal right to supply some or all of the other elements. When carried to its logical conclusion, this means simply that there can be no such thing as contributory infringement. It means simply that a patentee can have no remedy or relief except against the party who ultimately assembles all of the elements of the complete combination.

In the case of a lubricating system such as that of the Gullborg patent, and in the case of a phonograph such as that of the Berliner patent in *Leeds & Catlin* v. *Victor,* the new theory of counsel for petitioners means that the patentee cannot proceed against anyone short of the ultimate user who brings the compressor into association with the fitting or who brings the disk record into association with the stylus and tone arm. As was said by the Sixth Circuit Court of Appeals in *Thomson-Houston* v. *Ohio Brass,* 80 Fed. 712:

> "From the earliest times, all who take part in a trespass, either by actual participation therein or by aiding and abetting it, have been held to be jointly and severally liable for the injury inflicted. There must be some concert of action between him who does the injury and him who is charged with aiding and abetting before the latter can be held liable. When that is present however, the joint liability of both the principal and the accomplice has been invariably enforced. If this healthful rule is not to apply to trespass upon patent property, then indeed the protection which is promised by the Constitution and laws of the United States to inventors is a poor sham. Many of the most valuable patents are combinations of non-patentable elements, and the only effective mode of preventing infringement is by suits against those who, by furnishing the parts which distinguish the combination, make it possible for others to assemble and use the combination, and who, by advertisement of the sale of such parts and otherwise, intentionally solicit and promote such invasions of the patenteee's rights."

If the respondent were, in accordance with the new theory of counsel for the petitioners, relegated to infringement suits against the ultimate users of lubricating equipment, *e. g.*, the millions of owners of automobiles, the patent in suit would, as a practical matter, be "a poor sham,"—it would be utterly valueless to anyone. The amount which could be recovered from any one automobile owner would not cover the fee of the marshal in making service of a chancery subpoena in instituting a suit.

The "gist" theory of counsel for the petitioners is new not only in this case but is new and unheard of in the whole realm of patent law. In alleged support of his startling new proposition, counsel for the petitioners cites, however, three cases:

1. *Harvey Hubbell, Inc.* v. *General Electric Co.*, 267 Fed. 564.

2. *Morgan Envelope Co.* v. *Albany Perforated Wrapping Paper Co.*, 152 U. S. 425.

3. *Carbice Corporation* v. *American Patents Development Corp.*, 283 U. S. 27.

The *Hubbell* case was a simple case of non-infringement because of the failure of defendant's structure to respond to the claims in suit. The opinion of the Second Circuit Court of Appeals leaves no doubt of this.

The patent in suit was for a two-part attachment plug used to connect the cord of an electric appliance to a light socket. The device consisted of an insulated plug threaded for insertion in a light socket, and containing two contact springs mounted within it and so located that electrical connections could be established by insertion of the two blades of the cap attached to the appliance cord. So much of the structure was old and well-known.

The novelty of the device of the patent in suit lay in the provision of a pair of supplementary springs within the plug to engage notches in the cap blades* and thus

---

* This locking engagement is demanded in each of the claims in suit as indicated by the italicized portions of the claims:

"1. A separable attachment plug comprising an insulating body having independent recesses, locking contact springs in said recesses and independent guide holes leading into said recesses, and a cap having contact posts adapted to pass through the guide holes, and *engage the locking contact springs*, the walls of said recesses and guide holes closely surrounding the said contact springs and extending beyond the ends thereof, whereby a connection can be established only upon the passage of the contact posts through the guide holes and into the inner spaces constituting said recesses." (Italics supplied.)

"2. A separable attachment plug comprising a base provided with insulating chambers and insulating passages leading into said chambers, contact plates and locking springs in said chambers, an end block secured to the base and covering the chambers, and a cap provided with contacts and adapted to pass through the insulating passages *and engage the* contact plates and *locking springs* in the insulating chambers." (Italics supplied.)

to lock the parts in contact. The blades of the caps sold by defendant lacked these notches and when used with the plug of the patented combination did not make this locking engagement. Consequently there was no infringement. This is made clear by the Court in these passages in its opinion:

> "There was no novelty *per se* in the use of knife blade contacts. They had been commercially used in the Ft. Wayne-Jenney construction, and known at least since 1886. Nor was there inventive thought in securing a locking, as distinct from a frictional, engagement between contact post and *current carrying* spring. That was old, and is found in the senior patent, if nowhere else. The field of invention left open and occupied by Hubbell was to secure a *notched or recessed blade* (of the cap) by a *supplementary* spring, and this he did. That is the only idea validating the locking spring claims, and defendants do not employ that means." (Italics and parenthetical matter supplied.) (267 Fed. 572.)

> "No Bryant cap carries contacts with *recesses* (or notches) suitable for engagement with the Hubbell locking spring. Therefore such caps could be used so as to provide electrical connection when joined to a Hubbell plug, but the only mechanical connection was frictional. For obvious reasons the sale of caps was smaller than that of plugs or bases, and caps and bases severally are articles of commerce. There is no evidence apart from the filing of these two decoy orders; *and it is found as a fact that Bryant Company has manufactured caps, not with the intent of having them used with Hubbell plugs*, but with the hope that the public would buy the Bryant plug for use with the Bryant cap. When so used a locking contact occurs; that a poor mechanical connection did not prevent electrical use with the Hubbell plug or base, was, however, a matter of indifference to Bryant." (Italics supplied.) (267 Fed. 567.)

The case is not authority for the proposition for which petitioners cite it, but merely for the elementary proposition that there can be no infringement, direct or contributory, where the device sold or used does not respond literally or equivalently to the claims of the patent in suit.

In the case of *Morgan Envelope Co.* v. *Albany Perforated Wrapping Paper Co.*, 152 U. S. 425, the Court held that there was no infringement by the sale of rolls of toilet paper for use in a novel fixture by which the paper was dispensed in strips of convenient length, although the claims of the patent in suit embraced the combination of fixture and paper. The decision of the Court expressly recognized the doctrine of contributory infringement by the sale of one element of a patented combination with intent that it be employed to complete the combination, but denied the application of the principle to a situation where "the element made by the alleged infringer is an article of manufacture perishable in its nature, which it is the object of the mechanism to deliver, and which must be renewed periodically whenever the device is put to use" (152 U. S. 433).

The Court stated the question and its answer in these two passages:

> "The first defense raises the question whether, when a machine is designed to manufacture, distribute, or serve out to users a certain article, the article so dealt with can be said to be a part of the combination of which the machine itself is another part. If this be so, then it would seem to follow that the log which is sawn in the mill; the wheat which is ground by the rollers; the pin which is produced by the patented machine; the paper which is folded and delivered by the printing press, may be claimed as an element of a combination

of which the mechanism doing the work is another element. The motion of the hand necessary to turn the roll and withdraw the paper is analogous to the motive power which operates the machinery in the other instances.

"But without expressing an opinion upon this point, we think the facts of this case fail to sustain the charge of infringement." (152 U. S. 431.)

"The real question in this case is, whether, conceding the combination of the oval roll with the fixture to be a valid combination, the sale of one element of such combination, with the intent that it shall be used with the other element, is an infringement. We are of opinion that it is not. **There are doubtless many cases to the effect that the manufacture and sale of a single element of a combination, with intent that it shall be united to the other elements, and so complete the combination, is an infringement.** *Saxe* v. *Hammond, Holmes,* 456; *Wallace* v. *Holmes,* 9 Blatchford, 65; *Barnes* v. *Straus,* 9 Blatchford, 553; *Schneider* v. *Pountney,* 21 Fed. Rep. 399. **But we think these cases have no application to one where the element made by the alleged infringer is an article of manufacture perishable in its nature, which it is the object of the mechanism to deliver, and which must be renewed periodically, whenever the device is put to use.** Of course, if the product itself is the subject of a valid patent, it would be an infringement of that patent to purchase such product of another than the patentee; but if the product be unpatentable, it is giving to the patentee of the machine the benefit of a patent upon the product, by requiring such product to be bought of him. To repeat an illustration already put: If a log were an element of a patentable mechanism for sawing such log, it would, upon the construction claimed by the plaintiff, require the purchaser of the sawing device to buy his logs of the patentee of the mechanism, or subject him-

> self to a charge of infringement. This exhibits not only the impossiblity of this construction of the patent, but the difficulty of treating the paper as an element of the combination at all. In this view the distinction between repair and reconstruction becomes of no value, since the renewals of the paper is in a proper sense neither the one nor the other." (Italics supplied.) 152 U. S. 433.

In the *Carbice* case, 283 U. S. 27, 33, this Court, answering an effort to distinguish the *Carbice* case from the *Morgan* case, stated that the distinction was "without legal significance." Like the *Morgan* case, the *Carbice* case involved a situation where "the element made by the alleged infringer is an article of manufacture perishable in its nature, which it is the object of the mechanism to deliver (employ), and which must be renewed periodically whenever the device is put to use." (152 U. S. 433.)

In the *Morgan* case this Court specifically held that the familiar doctrine of contributory infringement by the sale of one of the permanent structural elements of a combination was not applicable to such a situation.

In the *Carbice* case this Court reiterated the conclusion reached in the *Morgan* case and the distinction there announced, saying:

> "The case at bar is wholly unlike *Leeds & Catlin* v. *Victor Talking Machine Co.*, 213 U. S. 325, 333, on which plaintiffs rely. That was an ordinary case of contributory infringement. The Victor Company sold machines embodying a patent for a combination. Leeds & Catlin were held to be infringers because the intended incorporation in the Victor machines of the article which they sold, did not constitute a repair of the machine, and hence was not within the license implied on sale. *Heyer* v. *Duplicator Mfg. Co.*, 263 U. S. 100. There was

> no suggestion that the Victor Company, which itself manufactured and sold the patented product, sought 'to derive its profits, not from the invention on which the law gives it a monopoly, but from the unpatented supplies with which it is used.' In the case at bar the plaintiffs neither sell nor license others to sell complete transportation packages. They supply merely one of the several materials entering into the combination; and on that commodity they have not been granted a monopoly. Their attempt to secure one cannot be sanctioned."

It is manifest from this brief review of these cases that none of them sustains the proposition for which it is cited by petitioners. Not one of these cases announces or even suggests a doctrine that there is no infringement where the alleged infringer has "not appropriated the gist or inventive part of the claims."

In the *Hubbell* case it was held that there can be no infringement where the device sold does not respond to the literal demand of the claims sued upon.

In the *Morgan* and *Carbice* cases it was held that a combination claim is not infringed by the sale of an unpatented perishable article of commerce which is dispensed or employed in the patented combination and necessarily consumed and periodically renewed in the use of the invention.

Interestingly enough, the *Morgan* case and the *Carbice* case approve the very precedents upon which the present suit must be decided.

In its opinion in the *Morgan* case this Court refers with approval to the "many cases to the effect that the manufacture and sale of a single element of the combination, with intent that it shall be united to the other elements, and so complete the combination, is an infringement." That is precisely the present case.

In the *Carbice* case, this Court said:

> "The case at bar is wholly unlike *Leeds & Catlin* v. *Victor Talking Machine Co.*, 213 U. S. 325, 333, on which plaintiffs rely. That was an ordinary case of contributory infringement. The Victor Company sold machines embodying a patent for a combination. Leeds & Catlin were held to be infringers because the intended incorporation in the Victor machines of the article which they sold, did not constitute a repair of the machine, and hence was not within the license implied on sale. *Heyer* v. *Duplicator Mfg. Co.*, 263 U. S. 100. There was no suggestion that the Victor Company, which itself manufactured and sold the patented product, sought 'to derive its profits, not from the invention on which the law gives it a monopoly, but from the unpatented supplies with which it is used.'"

It would be impossible to find a case more completely and exactly on all fours with *Leeds & Catlin* v. *Victor* than is the present case of *Rogers and Dusenberry* v. *Alemite*. What this Court said of the *Victor* case can be said of this "Alemite" case:

> "This is an ordinary case of contributory infringement. The Alemite Corporation sold machines embodying a patent for a combination. Rogers and Dusenberry were held to be infringers because the intended incorporation in the Alemite machines of the article which they sold, did not constitute a repair of the machine, and hence was not within the license implied on sale. *Heyer* v. *Duplicator Mfg. Co.*, 263 U. S. 100. There was no suggestion that the Alemite Corporation, which itself manufactured and sold the patented product, sought to 'derive its profits, not from the invention on which the law gives it a monopoly, but from the unpatented supplies with which it is used.'"

If the Alemite Corporation sought to derive its profits from the sale of grease to be used in or as a part of its lubricating equipment, then we should have a situation akin to that in the *Carbice* case. There is not, however, the breadth of a suggestion that the Alemite Corporation has included the grease as an element of its patent claims, or that it has licensed the purchasers of its grease to use the apparatus of the Gullborg patent, or that it has sold or attempted to sell its lubricating apparatus upon the condition that the purchasers buy their supplies of grease from the Alemite Corporation.

IV.

A General Answer to the Petitioners' Generalities.

At one point (pp. 33-34) in his brief counsel for the petitioners abandons all of his particularized theories and contentions, and frankly states the gravamen of his distress. He says:

> "The practical form in which the question is presented in the present case is the situation of a car owner whose car was equipped by its manufacturer with a set of the patented pin-fitting. Whether there was also placed in the tool box of the car at the time it was sold one of the small Alemite hand guns fitted with a coupler for attachment to the pin-fittings is not important because this car owner, in common with most car owners, prefers to have his car greased at public greasing stations where the grease is furnished from large compressors through a conduit which may be coupled to each of the pin-fittings on the car in the course of the greasing operation.
>
> "Now if the decision of the Third Circuit Court of Appeals is to prevail, in the case at bar, the car owner stands in an anomalous position. If the

> unpatented grease-guns (compressors and couplers) with which the greasing stations are equipped happen to be of a manufacturer other than that of the plaintiff (who owns the patent on the combination of the patented pin-fitting with the necessary old pump and coupler), then both the car owner and the service station proprietor will each be infringers of the combination patent and the manufacturer who supplied the greasing station with its compressors and couplers will be a contributor to that infringement; whereas if the greasing station proprietor had purchased his compressors from the plaintiff, then no question of infringement would be involved. In other words, the ordinary car owner is put to the duty of first finding out where the greasing station proprietor has purchased his compressor in order to determine whether he, the car owner, may make the ordinary and only possible use of the pin-fittings on his car.
>
> . . . . . .
>
> "We are aware of no applicable decision of this Court on this precise question of patent law, but believe it to be one that should be decided by this Court."

Gullborg's patent gave to him and his assigns and licensees the exclusive right to organize the necessary elements into the combinations of the claims in suit. The practical situation of the automobile owner, described by counsel for the petitioners, is that he has bought one complete organization of the patent in suit from the plaintiff. He is not, however, satisfied with the use of this one organization. "He prefers," as counsel says, "to have his car greased at public greasing stations." At the public greasing station, the combinations of the claims of the Gullborg patent are reorganized and reassembled. Into the newly organized

combination go the car owner's pin fittings which he has purchased from the Alemite Corporation, and also the compressor and coupler parts in the hands of the proprietor of the greasing station. The compressor and coupler parts which the car owner has purchased from the Alemite Corporation remain unused in the tool kit of the owner's car. When the proprietor of the greasing station brings out his compressor and couples it to the car owner's pin fittings, there is brought into being a new organization of the combinations of the claims of the Gullborg patent. This is a combination or organization separate and distinct from that which has been sold to the car owner. To use the language of the opinion of the Supreme Court in the Leeds & Catlin case, the car owner "increases the repertoire of the purchaser's" machine. He gains the advantage of a second organization of the combinations of the claims in suit. If the greasing proprietor has purchased his compressor and coupler parts from the defendants, then this new organization of the invention of the patent has not been sold to either party by the owner of the Gullborg patent. The Alemite Corporation will not derive its legitimate profit upon this second embodiment of the invention of the patent in suit unless the proprietor of the greasing station has purchased his compressor and coupler parts from the Alemite Corporation.

The perplexity of the car owner and of the proprietor of the greasing station, as depicted by counsel for petitioners, seems to us to be the best possible reason why the unlicensed manufacturer of the compressor and coupler parts of the combination as sold to the greasing station proprietor should be held accountable as a contributory infringer. Counsel for the petitioners says that:

> "If the unpatented grease-guns (compressors and couplers) with which the greasing stations are equipped happen to be of a manufacturer other than that of the plaintiff, . . . then both the car owner and the service station proprietor will each be infringers of the combination patent . . . ; whereas if the greasing station proprietor had purchased his compressors from the plaintiff, then no question of infringement would be involved."

What "a poor sham," indeed, would be the respondent's patent if the Alemite Corporation were relegated to suits against car owners and service station proprietors. If service station proprietors had the right to buy their compressor and coupler parts of the combinations from unlicensed manufacturers, then the Alemite Corporation would be relegated to the enforcement of minor claims against millions of minor infringers. In accordance with the doctrine of contributory infringement, it can maintain its suit against the manufacturer of the compressor and coupler parts, who alone makes possible these millions of minor infringements.

Counsel for petitioners says, in effect, that if the patent rights of the plaintiff are protected, then the "car owner is put to the duty of first finding out where the greasing station proprietor has purchased his compressor in order to determine whether he, the car owner, may make the ordinary and only possible use of the pin fittings on his car." This is quite an unfair and unwarranted presentation of the situation arising under the facts assumed by counsel. Under the "practical situation" assumed by counsel, "there was also placed in the tool box of the car at the time it was sold one of the small Alemite hand guns fitted with a coup-

ler for attachments to the pin fittings." (Petitioners' Brief, p. 33.) The car owner's trip to the greasing station is not "the ordinary and only possible use of the pin fittings on his car." He is quite free, if he chooses, to take out of his tool kit the compressor and coupler which he has purchased from the Alemite Corporation, and to use them in conjunction with the pin fittings on his car. He is quite free, if he chooses, to ask the greasing station proprietor to inject grease into the pin fittings on his car by the use of the Alemite compressor and coupler which the car owner has purchased and put in the tool box of that car. As counsel puts it, however, he "prefers to have his car greased at public greasing stations where the grease is furnished from large compressors through a conduit which may be coupled to each of the pin fittings on the car in the course of the greasing operation." If such is his preference, and if such is the preference of the greasing station proprietor, it is difficult to think of any good reason why the greasing station proprietor should not buy the compressor and coupler parts of the complete combination from the Alemite Corporation, rather than from some unlicensed manufacturer such as Rogers and Dusenberry. In one respect we agree with counsel for the petitioners. We agree with him that "whether there was also placed in the tool box of the car at the time it was sold one of the small Alemite hand guns fitted with the coupler for attachment to the pin fittings is not important." (Petitioner's Brief, p. 33.)

The greasing station proprietor is of course free to buy and have in his possession compressor and coupler parts sold to him by the Alemite Corporation. With these the greasing station proprietor may grease the

car owner's automobile without any question of liability on the part of either. In such a situation, counsel for the petitioners will not have any occasion to weep over the plight of "the ordinary car owner (who) is put to the duty of first finding out where the greasing station proprietor has purchased his compressor."

Counsel for petitioners represents manufacturers of the compressor and coupler parts of the combination. He asserts that they should be free to sell these parts. Precisely the same arguments could be advanced on behalf of someone else who wishes to manufacture and sell the pin fitting parts of the combination. If Rogers and Dusenberry should be free to sell the compressor and coupler parts, then anyone and everyone else should be equally free to sell the pin fitting parts. In such a situation, it would be only the ultimate user who would be accountable to the Alemite Corporation, since it would be only the ultimate user who would assemble the complete combinations of the claims in suit. Obviously, under the contentions of counsel, the plaintiff-respondent's patent would not have the value of the paper upon which it is printed.

V.

Comment Relative to Petitioners' Brief.

Counsel for the petitioners presumes in his brief to tell this Court what the Sixth Circuit Court of Appeals did have before it and did not have before it in the cases decided in the six cases reported at 18 Fed. (2d) 29. The facts presented by counsel are grossly inaccurate and misrepresentative. It seems to us that these representations are peculiarly unwarranted for the reason that upon the trial the plaintiff called El-

wood Hansmann to identify and produce documents and exhibits which would show precisely the facts and structures upon which the decisions of the Sixth Circuit Court of Appeals and other courts were based. The defendants objected to the receipt in evidence of any matter which would state the factual background of these decisions. The objections of counsel for the defendants were sustained. (R., pp. 121 to 126.)

In view of these objections, and in view, therefore, of the absence from the record in this case of the facts of the decisions in other cases, we do not believe that the Court is warranted in accepting counsel's unsupported statements as to what was or what was not the construction of the devices involved in these other suits.

Counsel for the petitioners refers repeatedly to the opinion of the First Circuit Court of Appeals in the case of *Alemite* v. *Lubrair,* 62 Fed. (2d) 899. As is shown in the report of that case at 62 Fed. (2d) 899, the Court disposed of the case without having received any brief on behalf of the appellant, Alemite Corporation, and without having heard any argument on behalf of Alemite. The only appearance of counsel for the Alemite Corporation was upon a motion for a postponement of the argument because counsel for the appellant were actually engaged in the trial of a long lawsuit in the Eastern District of Michigan, between Kellogg Switchboard & Supply Company and American Telephone & Telegraph Company. The consideration of the motion was deferred by the Court until the day previously set for argument, whereupon the motion was denied, and counsel for appellee was at once heard and the brief of counsel for appellee was at once received.